DATA SHEET

(DOC No. HX83xx-A-DS)

HX83xx-A

480RGB x 864 dot, 16.7M color,
TFT Mobile Single Chip Driver

Preliminary version 01 February, 2009

Himax Technologies, Inc.
http://www.himax.com.tw

List of Contents

February, 2009

1. General Description 8

2. Features 9

2.1 Display 9
2.2 Display Module 9
2.3 Display/Control Interface 10

3. Device Overview 11

3.1 Block Diagram 11
3.2 Pin Description 12
3.3 Pin Assignment 15
3.4 PAD Coordinate 16
3.4.1 Bump Arrangement 27

4. Interface 29

4.1 System Interface 29
4.1.1 Serial Data Transfer Interface 30
4.2 RGB Interface 34
4.3 DSI Protocol 39
4.3.1 Processor to peripheral Direction packets Data types 42
4.3.2 Peripheral to Processor (Reverse Direction) 49

5. Function Description 51

5.1 Gamma characteristic correction function 51
5.2 Gamma Characteristic Correction Function 52
5.3 Gamma curve 95
5.4 Oscillator 96
5.5 LCD Power Generation Scheme 97
5.6 DC/DC Converter Circuit 98
5.6.1 Use PFM DC/DC Converter 98
5.7 Characteristics of I/O 99
5.7.1 Output or Bi-directional (I/O) Pins 99
5.7.2 Input Pins 99
5.8 Sleep Out –Command and Self-Diagnostic functions of The Display Module 100
5.8.1 Register Loading Detection 100
5.8.2 Functionality Detection 101
5.9 Power On/Off Sequence 102
5.9.1 Case 1 – NRESET line is held High or Unstable by Host at Power On 103
5.9.2 Case 2 – NRESET line is held Low by Host at Power On 104
5.10 Uncontrolled Power Off 104
5.11 Content Adaptive Brightness Control (CABC) Function 105
5.11.1 Module Architectures 106
5.11.2 Brightness Control Block 107
5.11.3 Minimum brightness setting of CABC function 108

6. Command 109

6.1 Command List 109
6.1.1 Standard Command 109
6.1.2 User Define Command List Table 112
6.2 Command Description 115
6.2.1 NOP 115
6.2.2 Software Reset (01h) 116
6.2.3 Read Red Color (06h) 117
6.2.4 Read Green Color (07h) 118

Himax Confidential
Do Not Copy

6.2.5 Read Blue Color (08h) 119
6.2.6 Read Display Power Mode (0Ah) 120
6.2.7 Read Display MADCTL (0Bh) 122
6.2.8 Read Display Pixel Format (0Ch) 124
6.2.9 Read Display Image Mode (0Dh) 126
6.2.10 Read Display Signal Mode (0Eh) 127
6.2.11 Read Display Self-Diagnostic Result (0Fh) 129
6.2.12 Sleep In (10h) 130
6.2.13 Sleep Out (11h) 131
6.2.14 Display Inversion Off (20h) 132
6.2.15 Display Inversion On (21h) 133
6.2.16 Gamma Set (26h) 134
6.2.17 Display Off (28h) 135
6.2.18 Display On (29h) 136
6.2.19 Memory Access Control (36h) 137
6.2.20 Interface Pixel Format (3Ah) 139
6.2.21 Read_DDB_start (A1h) 140
6.2.22 Read_DDB_continue (A8h) 141
6.2.23 Read ID1 (DAh) 142
6.2.24 Read ID2 (DBh) 143
6.2.25 Read ID3 (DCh) 144
6.2.26 Write Display Brightness (51h) 145
6.2.27 Read Display Brightness Value (52h) 146
6.2.28 Write CTRL Display (53h) 147
6.2.29 Read CTRL Value Display (54h) 149
6.2.30 Write Content Adaptive Brightness Control (55h) 150
6.2.31 Read Content Adaptive Brightness Control (56h) 151
6.2.32 Write CABC minimum brightness (5Eh) 152
6.2.33 Read CABC minimum brightness (5Fh) 153
6.2.34 SETPOWER: Set Power (B1h) 154
6.2.35 SETRGBIF: Set RGB interface related register (B3h) 165
6.2.36 SETCYC: Set Display Waveform Cycle (B4h) 166
6.2.37 SETVCOM: Set VCOM Voltage (B6h) 174
6.2.38 SETEXTC: Enable extention command (B9h) 177
6.2.39 SETOTP: Set OTP (BBh) 178
6.2.40 SETDGCLUT: Set DGC LUT (C1h) 179
6.2.41 SETID: Set ID (C3h) 181
6.2.42 SETDDB: Set DDB (C4h) 182
6.2.43 SETPANEL (CCh) 183
6.2.44 SET SPI READ INDEX (FEh) 185
6.2.45 SPIREAD (FFh) 186
6.2.46 SETGAMMA: Set Gamma Curve Related Setting (E0h) 187

7. Power Supply 189

7.1 Power Supply Setup 189
7.1.1 Architecture 1 with PFM circuit 189
7.2 Voltage Configuration 190

8. Electrical Characteristics 191

8.1 Absolute Maximum Ratings 191
8.2 ESD Protection Level 191
8.3 DC Characteristics 192
8.4 AC Characteristics 194
8.4.1 Serial Interface Characteristics (3-Pin Serial) 194

Himax Confidential
Do Not Copy

This information contained herein is the exclusive property of Himax and shall not be distributed, reproduced, or disclosed in whole or in part without prior written permission of Himax.

8.4.2 RGB Interface Characteristics 195
8.4.3 Reset Input Timing 200

9. Layout Recommendation 201

10. OTP Programming 203

10.1 OTP table 203
10.2 OTP programming flow 208
10.3 Programming sequence 209
10.4 OTP Programming Circuitry 210

11. Ordering Information 211

12. Revision History 211

Himax Confidential
Do Not Copy

Figure 4.1 Serial Data stream, write mode 30
Figure 4.2 Serial Interface protocol 3 wire serial interface (write mode) 31
Figure 4.3 3 wire Serial Interface protocol, read mode 32
Figure 4.4 Display Module Data Transfer Recovery 33
Figure 4.5 DCK cycle 34
Figure 4.6 16 bit/pixel Color Order on the RGB I/F 35
Figure 4.7 18 bit/pixel Color Order on the RGB I/F 36
Figure 4.8 24bit/pixel Color Order on the RGB I/F 37
Figure 4.9 General Timing Diagram 38
Figure 4.10 Multiple HS Transmission packets 39
Figure 4.11 Structure of the Short packet 39
Figure 4.12 Structure of the Long packet 40
Figure 4.13 The format of Data ID. 40
Figure 4.14 show Short- / Long- packet transmission command sequence 41
Figure 5.1 Gamma adjustments different of source driver with digital gamma correction 51
Figure 5.2 Grayscale Control 53
Figure 5.3 Gamma Resister Stream and Gamma Reference Voltage 55
Figure 5.4 Gamma Resister Stream 56
Figure 5.5 Gamma Curve according to the GC0 to GC3 Bit 95
Figure 5.6 Oscillation Circuit 96
Figure 5.7 LCD Power Generation Scheme 97
Figure 5.8 DC/DC Converter Circuit (PFM) 98
Figure 5.9 Sleep Out Flow Chart – Command and Self-Diagnostic Functions 100
Figure 5.10 Sleep Out Flow Chart Internal Function Detection 101
Figure 5.11 Case 1 – NRESET line is held High or Unstable by Host at Power On 103
Figure 5.12 Case 2 – NRESET line is held Low by Host at Power On 104
Figure 5.13 CABC Block Diagram 105
Figure 5.14 Module architecture 106
Figure 5.15 CABC_PWM_OUT Output Duty 107
Figure 7.1 Power supply with PFM circuit 189
Figure 8.1 3-pin Serial Interface Characteristics 194
Figure 8.2 Vertical Timings for RGB I/F 195
Figure 8.3 Horizontal Timing for RGB I/F 196
Figure 8.4 General Timings for RGB I/F 198
Figure 8.5 Reset Input Timing 200
Figure 9.1 Layout Recommendation 201
Figure 10.1 OTP Programming Circuitry 210

Himax Confidential
Do Not Copy

List of Tables

Table 4.1 Interface selection 29
Table 4.2 Data Types for Processor-sourced Packets 42
Table 4.3 shows the Error Report Bit Definitions 50
Table 4.4 The complete set of peripheral-to-processor Data Types 50
Table 5.1 Gamma-Adjustment Registers 54
Table 5.2 Offset Adjustment 0 ~ 5 57
Table 5.3 Center Adjustment 57
Table 5.4 VinP 0 58
Table 5.5 VinP 1 59
Table 5.6 VinP 2 60
Table 5.7 VinP 14 61
Table 5.8 VinP 15 62
Table 5.9 VinP 16 63
Table 5.10 VinP5 65
Table 5.11 VinP 11 67
Table 5.12 VinP 3 68
Table 5.13 VinP 4 69
Table 5.14 VinP 6 69
Table 5.15 VinP 7 70
Table 5.16 VinP 8 70
Table 5.17 VinP 9 71
Table 5.18 VinP 10 71
Table 5.19 VinP 12 72
Table 5.20 VinP 13 72
Table 5.21 VinN 0 73
Table 5.22 VinN 1 74
Table 5.23 VinN 2 75
Table 5.24 VinN 14 76
Table 5.25 VinN 15 77
Table 5.26 VinN 16 78
Table 5.27 VinN5 80
Table 5.28 VinN 11 82
Table 5.29 VinN 3 83
Table 5.30 VinN 4 84
Table 5.31 VinN 6 84
Table 5.32 VinN 7 85
Table 5.33 VinN 8 85
Table 5.34 VinN 9 86
Table 5.35 VinN 10 86
Table 5.36 VinN 12 87
Table 5.37 VinP/N 13 87
Table 5.38 Voltage Calculation Formula of 64-Grayscale Voltage (Positive Polarity) 89
Table 5.39 Voltage Calculation Formula of 64-Grayscale Voltage (Negative Polarity) 91
Table 5.40 Voltage Calculation Formula of 256-Grayscale Voltage (Positive/Negative Polarity) 94
Table 5.41 Characteristics of Output or Bi-directional (I/O) Pins 99
Table 5.42 Characteristics of Input Pins 99
Table 5.43 CABC timing table 107
Table 7.1 Power Supply Voltage Configuration 190
Table 7.2 Adoptability of Component 190
Table 8.1 Absolute Maximum Rating 191
Table 8.2 ESD Protection Level 191
Table 8.3 DC Characteristics 192
Table 8.4 Power consumptions 193
Table 8.5 Vertical Timings for RGB I/F 195

Himax Confidential
Do Not Copy

This information contained herein is the exclusive property of Himax and shall not be distributed, reproduced, or disclosed in whole or in part without prior written permission of Himax.

Table 8.6 Horizontal Timings for RGB I/F 197
Table 8.7 General Timings for RGB I/F 199
Table 8.8 Reset Timing 200
Table 9.1 Maximum Layout Resistance 202
Table 10.1 OTP table 206

Himax Confidential
Do Not Copy

This information contained herein is the exclusive property of Himax and shall not be distributed, reproduced, or disclosed in whole or in part without prior written permission of Himax.

1. General Description

This document describes Himax's HX83xx-A is supports WVGA resolution driving controller. The HX83xx-A is designed to provide a single-chip solution that combines a source driver, power supply circuit to drive a TFT dot matrix LCD with 480RGBx864 dots at maximum.

The HX83xx-A can be operated in low-voltage (1.65V) condition for the interface and integrated internal boosters that produce the liquid crystal voltage, breeder resistance and the voltage follower circuit for liquid crystal driver. In addition, The HX83xx-A also supports various functions to reduce the power consumption of a LCD system via software control.

The HX83xx-A also supports 16 / 18 / 24-bit RGB interface and 3-wire serial peripheral interface , MIPI DSI interface mode. Via serial peripheral interface or DSI interface, HX83xx-A can receivie the initialization settings for the display operation and for selecting the display functions. The initialization settings can be stored in the non-volatile memory and are loaded at display start.

The HX83xx-A is suitable for any small portable battery-driven and long-term driving products, such as small PDAs, digital cellular phones and bi-directional pagers.

Himax Confidential
Do Not Copy

2. Features

2.1 Display

- Resolution:
  - 480RGB x 864
  - 480RGB x 854
  - 480RGB x 800
  - 480RGB x 640
  - 360RGB x 640

- Display Color modes
  - Normal Display Mode On
    - 65,536 (R(5),G(6),B(5)) colors
    - 262,144 (R(6),G(6),B(6)) colors
    - 16,777,216 (R(8),G(8),B(8)) colors

2.2 Display Module

- Support 1440 source channel outputs
- Adjusted Source voltages (V0p ~ V7p,V0n ~ V7n)
- Output voltage level
  - VSP=4.7~5.5V
  - VSN=-5.5~-4.7V
  - Positive source output voltage level: VSPR to VSSA is 3.5V to 5V
  - Negative source output voltage level: VSNR to VSSA is -5V to -3.5V
  - Positive gate driver output voltage level: VGH to VSSA is 15V, 18V, 20V
  - Negative gate driver output voltage level: VGL to VSSA is -8V, -10V, -12V
  - VCOM= -2V ~ 0V, a step=16mV
- 1-dot inversion, 2-dot inversion, Column inversion

Himax Confidential
Do Not Copy

This information contained herein is the exclusive property of Himax and shall not be distributed, reproduced, or disclosed in whole or in part without prior written permission of Himax.

2.3 Display/Control Interface

- Display Interface types supported
  - Serial data transfer interface
  - 16-/18-/24- data lines parallel video (RGB) interface
    - Register control for display and function selection through SPI protocol
  - DSI (Display Serial Interface) interface
- Color modes
  - 16 bit/pixel: R(5), G(6), B(5)
  - 18 bit/pixel: R(6), G(6), B(6)
  - 24 bit/pixel: R(8), G(8), B(8)

Input power

- I/O and interface power supply (VDD1): 1.65V ~ 3.3V
- Analog power supply (VDD2): 2.3V ~ 3.3V
- Logic power supply (VDD3): 2.3V ~ 3.3V
- DSI power supply (DSI_VCC): 1.65V ~ 3.3V
- OTP programming viltage (PVSS): 7.5V ± 0.2V

Miscellaneous

- Low power consumption, suitable for battery operated systems
- GAS function for preventing image sticking when abnormal power off
- CMOS compatible inputs
- Optimized layout for COG assembly
- Temperature range: -40 ~ +85 °C
- HBM ESD (Human Body Mode)>2KV, MM(Machine Mode)>±200V and Latch up>±200mA
- Proprietary multi phase driving for lower power consumption
- 4 selectable electro-optical transfer function (Gamma)
- Oscillator for display clock generation
- Support Inversion mode
- DC/DC converter for source
- Support DC COM driving
- VCOM voltage gererator
- Support Equalize function
- Support 2 step gate signal
- Support normal black/normal white LCD
- OTP memory to store initialization register settings (3 times for VCOM setting , ID setting)
- Support Content Adaptive Brightness Control(CABC) function
- Support DGC(Digital Gamma Correction) Function

Himax Confidential
Do Not Copy

This information contained herein is the exclusive property of Himax and shall not be distributed, reproduced, or disclosed in whole or in part without prior written permission of Himax.

3. Device Overview

3.1 Block Diagram

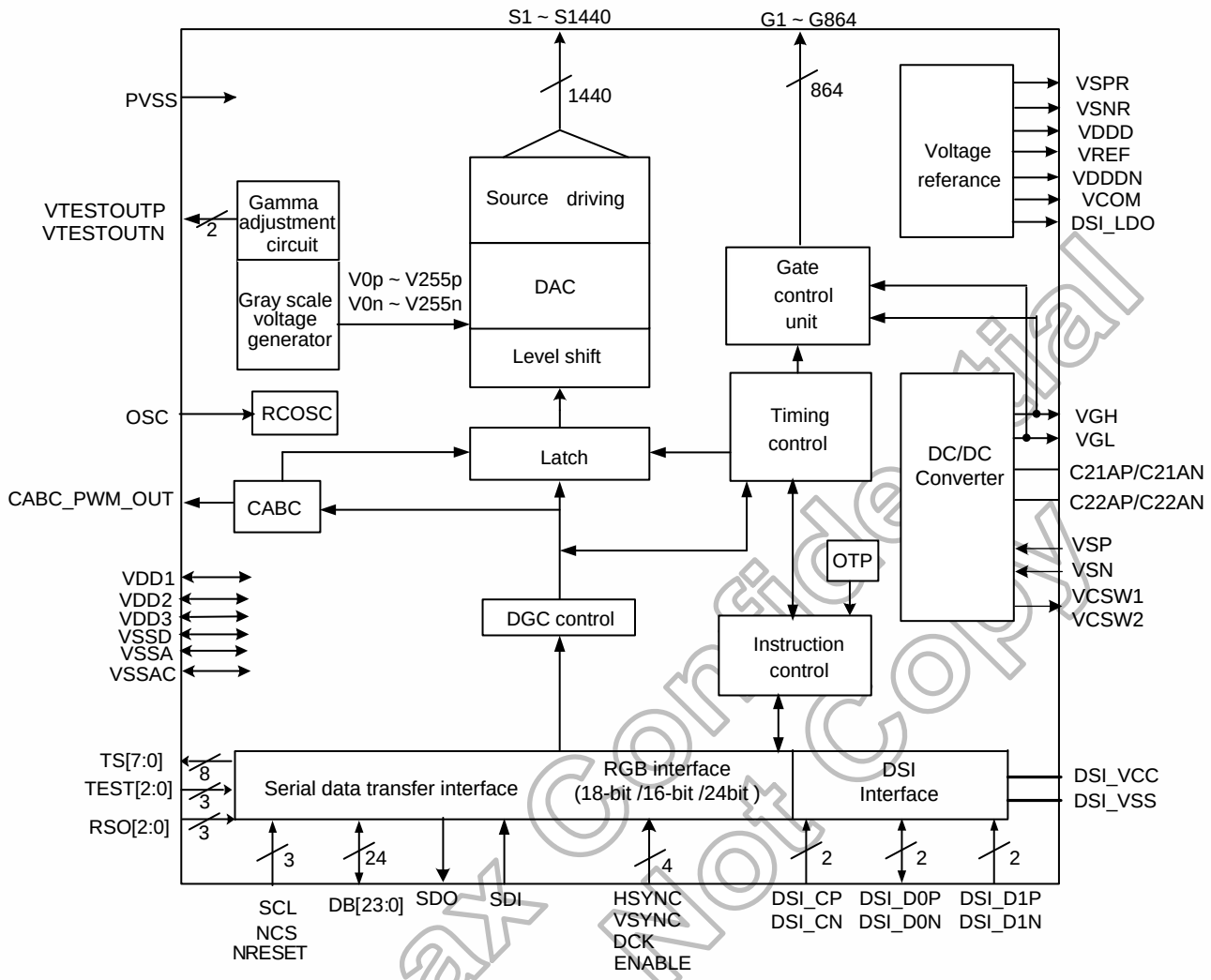

Himax Confidential
Do Not Copy

This information contained herein is the exclusive property of Himax and shall not be distributed, reproduced, or disclosed in whole or in part without prior written permission of Himax.

3.2 Pin Description

<table>
<tr><th>Signals</th><th>I/O</th><th>Pin Number</th><th>Connected with</th><th>Description</th></tr>
<tr><td colspan="5">Host Interface Pins</td></tr>
<tr><td>RSO0</td><td>I</td><td>1</td><td>MPU</td><td rowspan="3">Resolution selection pins. RSO[2:0] is used for selecting resolution.
If not used, please let it open.
<table>
<tr><th>RSO2</th><th>RSO1</th><th>RSO0</th><th>Resolution</th></tr>
<tr><td>0</td><td>0</td><td>0</td><td>480RGBX864</td></tr>
<tr><td>0</td><td>0</td><td>1</td><td>480RGBX854</td></tr>
<tr><td>0</td><td>1</td><td>0</td><td>480RGBX800</td></tr>
<tr><td>0</td><td>1</td><td>1</td><td>480RGBX640</td></tr>
<tr><td>1</td><td>0</td><td>0</td><td>360 RGBX640</td></tr>
<tr><td>1</td><td>0</td><td>1</td><td>Setting disable</td></tr>
<tr><td>1</td><td>1</td><td>0</td><td>Setting disable</td></tr>
<tr><td>1</td><td>1</td><td>1</td><td>Setting disable</td></tr>
</table></td></tr>
<tr><td>RSO1</td><td>I</td><td>1</td><td>MPU</td></tr>
<tr><td>RSO2</td><td>I</td><td>1</td><td>MPU</td></tr>
<tr><td>BS0 ~ BS1</td><td>I</td><td>2</td><td>VSSD/
VDD1</td><td>Select the MPU interface mode as listed below:
<table>
<tr><th>BS1</th><th>BS0</th><th>MPU interface mode</th><th>DB pins</th></tr>
<tr><td>0</td><td>0</td><td>3 wire serial + RGB interface (SCL Risingl edge)</td><td>RGB:16/18/24 bit</td></tr>
<tr><td>0</td><td>1</td><td>DSI video mode</td><td>DSI_CP,
DSI_CN,
DSI_D0P,
DSI_D0N,
DSI_D1P,
DSI_D1N</td></tr>
<tr><td>1</td><td>0</td><td>Reserve</td><td>-</td></tr>
<tr><td>1</td><td>1</td><td>Reserve</td><td>-</td></tr>
</table>
Must be connected to VSSD or VDD1.</td></tr>
<tr><td>NCS</td><td>I</td><td>1</td><td>MPU</td><td>Chip select signal.
Low: chip can be accessed;
High: chip cannot be accessed.
If this pin is not used, please connect it to VSSD or VDD1.</td></tr>
<tr><td>NRESET</td><td>I</td><td>1</td><td>MPU or reset circuit</td><td>Reset pin. Setting either pin low initializes the LSI. Must be reset after power is supplied (Must be connected to VSSD or VDD1). (Latch type)</td></tr>
<tr><td>SCL</td><td>I</td><td>1</td><td>MPU</td><td>Serves as a write signal and writes data at the rising edge.
When operate in serial interface, it serves as SCL (Serial Clock)
If not used, let it open or connected to VDD1.</td></tr>
<tr><td>DB23~0</td><td>I/O</td><td>24</td><td>MPU</td><td>RGB interface
<table>
<tr><th>Data bus</th><th>Used</th><th>Unused</th></tr>
<tr><td>16-bit bus</td><td>DB21~17,
DB13~8, DB5~1</td><td>DB23-22,
DB116-14,
DB7-6, DB0</td></tr>
<tr><td>18-bit bus</td><td>DB21~16,
DB13~8, DB5~0</td><td>DB22-21,
DB15-14,
DB7-6</td></tr>
<tr><td>24-bit bus</td><td>DB23-D0</td><td>--</td></tr>
</table>
Let the unused pins open for each mode.</td></tr>
<tr><td>SDO</td><td>O</td><td>1</td><td>MPU</td><td>Serial data output. Let it to open in MPU interface mode.</td></tr>
<tr><td>SDI</td><td>I</td><td>1</td><td>MPU</td><td>Serial data input pin in serial interface operation.</td></tr>
<tr><td>DSI_LDO_EN</td><td>I</td><td>1</td><td>-</td><td>If DSI_LDO_EN = low, the internal DSI_LDO regulator will be turned on.
If DSI_LDO_EN = high, the internal DSI_LDO regulator will be turned off, DSI_LDO should connect to external power supply.
Must be connected to VDD1 or VSSD.</td></tr>
<tr><td colspan="5">Clock Input and RGB Interface</td></tr>
<tr><td>HSYNC</td><td>I</td><td>1</td><td>-</td><td>Line synchronizing signal.
Must be connected to VSSD or VDD1 if not used.</td></tr>
<tr><td>ENABLE</td><td>I</td><td>1</td><td>MPU</td><td>A data ENABLE signal in RGB I/F mode. Has to be fixed to VSSD level in MPU interface mode.</td></tr>
<tr><td>VSYNC</td><td>I</td><td>1</td><td>-</td><td>Frame synchronizing signal.
Must be connected to VSSD or VDD1 if not used.</td></tr>
<tr><td>DCK</td><td>I</td><td>1</td><td>-</td><td>Dot clock signal.
Must be connected to VSSD or VDD1 if not used.</td></tr>
</table>

Himax Confidential
Do Not Copy

This information contained herein is the exclusive property of Himax and shall not be distributed, reproduced, or disclosed in whole or in part without prior written permission of Himax.

Source and Gate Driver Output Pins				
S1~S1440	O	1440	LCD	Output voltages applied to the liquid crystal. RGB resolution: Source channels 360RGB: S1 ~ S540, S901 ~ S1440 480RGB: S1 ~ S1440
G1 ~ G864	O	864	LCD	Gate driver output pins. These pins output VGH, VGL.(If not used, should be open)
Power Supply Pins				
PCCS0 ~ PCCS1	I	2	VSSD/ VDD3	Select the VSP/VSN bumping method as listed below: PCCS1 / PCCS0 / Driving mode 0 / 0 / One Inductor Mode 0 / 1 / Two Inductor Mode 1 / 0 / Reserve 1 / 1 / Reserve Must be connected to VSSD or VDD3.
VDD1	I		Power supply	A power supply for the I/O circuit. VDD1= 1.65 ~ 3.3V
VDD2	I		Power supply	A power supply for the analog power. VDD2 = 2.3 ~ 3.3V VDD2 input level should be same as VDD3 input level to avoid the level-mismatching at internal level shifter circuit.
VDD3	I		Power supply	A power supply for the logic power, DC/DC converter VDD3 = 2.3 ~ 3.3V.
VSSA	P		Power supply	Analoge ground. VSSA = 0V. When using the COG method, connect to VSSD on the FPC to prevent noise.
VSSAC	P		Power supply	Analoge ground. Must connect to VSSA on the FPC.
VSSD	P		Power supply	Ground for the internal logic. VSSD = 0V. When using the COG method, connect to VSSA on the FPC to prevent noise.
PVSS	I		Power supply	External high voltage pin used in OTP mode and operates at 7.5V. If not used, let it open.

Output Pins of Power and reference voltage				
VSP	I		Stabilizing capacitor	Input voltage from the set-up circuit (4.7V to 5.5V). it is generated from VDD3.
VSN	I		Stabilizing capacitor	Input voltage from the set-up circuit (-4.7V to -5.5V). it is generated from VDD3.
VSPC	I		VSP	Positive boosting reference voltage input.
VSNC	I		VSN	Negative boosting reference voltage input.
VSPR	O		Stabilizing capacitor	Positive regulated voltage output (3.5V ~ VSP - 0.5)
VSNR	O		Stabilizing capacitor	Positive regulated voltage output (-3.5V ~ VSN + 0.5)
VDDD	O		Stabilizing capacitor	Internal logic voltage output
VDDDN	O		Stabilizing capacitor	Internal logic voltage output (-2.5V fixed)
VREF	O		Stabilizing capacitor	Reference voltage from internal band gap circuit. The tolerance of VREF voltage is ± 3 % .(1.8V fixed)
VGH	O		Stabilizing capacitor	Output voltage from the step-up circuit, it is generated from VSP and VSN. Connect to a stabilizing capacitor between VSSA and VGH.
VGL	O		Stabilizing capacitor	Output voltage from the step-up circuit, it is generated from VSP and VSN. Connect to a stabilizing capacitor between VSSA and VGL. Place a schottkey barrier diode between VSSA and VGL.
VCOM	O		Stabilizing capacitor	The power supply of common voltage in DC com driving. The voltage range is set between -2V to 0V. It must be connected a stabilizing capacitor 2.2u to VSSD.
VCOMR	I		-	This pin is used for external VCOM input.
DSI_LDO	O		Capacitor	DSI: DSI regulator output pin. (1.2V ~ 1.3V) Connect to a stabilizing capacitor between DSI_VSS and DSI_LDO If not used, please open these pins.
DC/DC pumping				
C21AP, C21AN	I/O	4	Step-up Capacitor	Connect to the step-up capacitors according to the DC/DC pumping factor by pumping the VGH voltage.
C22AP, C22AN	I/O	4	Step-up	Connect to the step-up capacitors according to the DC/DC

Himax Confidential
Do Not Copy

This information contained herein is the exclusive property of Himax and shall not be distributed, reproduced, or disclosed in whole or in part without prior written permission of Himax.

			Capacitor	pumping factor by pumping the VGL voltage.
VCSW1	O	-	-	Boosting control output1, it needs to connect to the gate pin of NMOS on external DC/DC converter circuit. (0~VDD3)
VCSW2	O	-	-	Boosting control output2, it needs to connect to the gate pin of PMOS on external DC/DC converter circuit. (0~VDD3)
CABC & ABC & Ambient light sensor				
CABC_PWM_OUT	O	1	-	Backlight On/Off control pin. If use CABC function, the pin can connect to external LED driver IC. The output voltage range = 0~ VDD1.
Test Pins				
OSC	I	1	-	Oscillator input for test purpose. If not used, please let it open or connected to VSSD.(weak pull low)
TEST0	I	1	VSSD	A test pin. This pin is by internal logic function test.This pin can output on FPC. If not used, let it open or connected to VSSD.(weak pull low)
TEST1	I	1	VSSD	A test pin. This pin is by internal logic function test.This pin can output on FPC. If not used, let it open or connected to VSSD.(weak pull low)
TEST2	I	1	MPU	A test pin. This pin is by internal logic function test.This pin can output on FPC. If not used, let it open or connected to VSSD.(weak pull low)
TS7~0	O	8	Open	A test pin. Disconnect it.
VTESTOUTP	O	1	Open	A test pin. Disconnect it. This pin will output Gamma voltage. This pin can output on FPC.
VTESTOUTN	O	1	Open	A test pin. Disconnect it. This pin will output Gamma voltage. This pin can output on FPC.
DUMMYR1 DUMMYR2	-	2	Open	Dummy pads. Available for measuring the COG contact resistance. They are short-circuited within the chip.
MIPI-DSI Interface Parts				
DSI_D0P, DSI_D0N	I/O	2	DSI Host	MIPI-DSI Data differential signal input pins (Data lane 0).
DSI_CP, DSI_CN	I	2	DSI Host	MIPI-DSI CLOCK differential signal input pins
DSI_D1P, DSI_D1N	I	2	DSI Host	MIPI-DSI Data differential signal input pins (Data lane 1).
DSI_VCC	P	1	Power Supply	Power supply for the MIPI DSI analog power.DSI_VCC = 1.65V ~ 3.3V
DSI_VSS	P	1	Ground	MIPI DSI analogy ground. DSI_VSS = 0V. When using the COG method, connect to VSSA on the FPC to prevent noise.

Himax Confidential
Do Not Copy

This information contained herein is the exclusive property of Himax and shall not be distributed, reproduced, or disclosed in whole or in part without prior written permission of Himax.

3.3 Pin Assignment

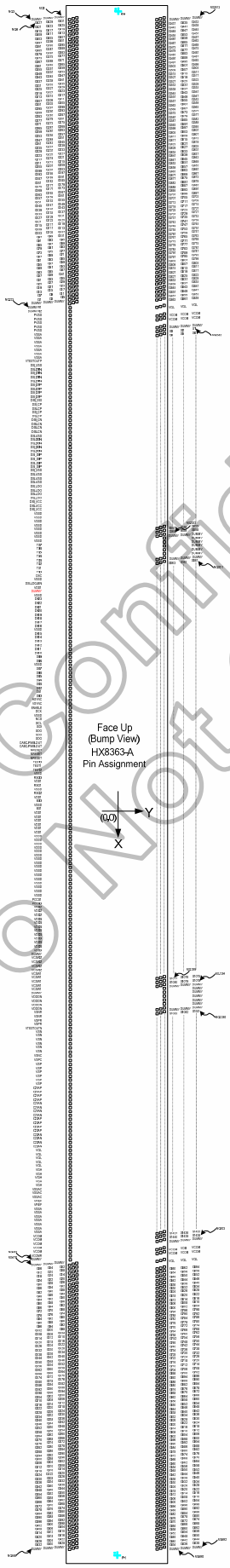

Himax Confidential
Do Not Copy

3.4 PAD Coordinate

No.	Name	X	Y	No.	Name	X	Y	No.	Name	X	Y	No.	Name	X	Y
1	DUMMY	-11886	-285	61	G317	-11166	-285	121	G197	-10446	-285	181	G77	-9726	-285
2	DUMMY	-11874	-375	62	G315	-11154	-375	122	G195	-10434	-375	182	G75	-9714	-375
3	DUMMY	-11862	-465	63	G313	-11142	-465	123	G193	-10422	-465	183	G73	-9702	-465
4	G431	-11850	-285	64	G311	-11130	-285	124	G191	-10410	-285	184	G71	-9690	-285
5	G429	-11838	-375	65	G309	-11118	-375	125	G189	-10398	-375	185	G69	-9678	-375
6	G427	-11826	-465	66	G307	-11106	-465	126	G187	-10386	-465	186	G67	-9666	-465
7	G425	-11814	-285	67	G305	-11094	-285	127	G185	-10374	-285	187	G65	-9654	-285
8	G423	-11802	-375	68	G303	-11082	-375	128	G183	-10362	-375	188	G63	-9642	-375
9	G421	-11790	-465	69	G301	-11070	-465	129	G181	-10350	-465	189	G61	-9630	-465
10	G419	-11778	-285	70	G299	-11058	-285	130	G179	-10338	-285	190	G59	-9618	-285
11	G417	-11766	-375	71	G297	-11046	-375	131	G177	-10326	-375	191	G57	-9606	-375
12	G415	-11754	-465	72	G295	-11034	-465	132	G175	-10314	-465	192	G55	-9594	-465
13	G413	-11742	-285	73	G293	-11022	-285	133	G173	-10302	-285	193	G53	-9582	-285
14	G411	-11730	-375	74	G291	-11010	-375	134	G171	-10290	-375	194	G51	-9570	-375
15	G409	-11718	-465	75	G289	-10998	-465	135	G169	-10278	-465	195	G49	-9558	-465
16	G407	-11706	-285	76	G287	-10986	-285	136	G167	-10266	-285	196	G47	-9546	-285
17	G405	-11694	-375	77	G285	-10974	-375	137	G165	-10254	-375	197	G45	-9534	-375
18	G403	-11682	-465	78	G283	-10962	-465	138	G163	-10242	-465	198	G43	-9522	-465
19	G401	-11670	-285	79	G281	-10950	-285	139	G161	-10230	-285	199	G41	-9510	-285
20	G399	-11658	-375	80	G279	-10938	-375	140	G159	-10218	-375	200	G39	-9498	-375
21	G397	-11646	-465	81	G277	-10926	-465	141	G157	-10206	-465	201	G37	-9486	-465
22	G395	-11634	-285	82	G275	-10914	-285	142	G155	-10194	-285	202	G35	-9474	-285
23	G393	-11622	-375	83	G273	-10902	-375	143	G153	-10182	-375	203	G33	-9462	-375
24	G391	-11610	-465	84	G271	-10890	-465	144	G151	-10170	-465	204	G31	-9450	-465
25	G389	-11598	-285	85	G269	-10878	-285	145	G149	-10158	-285	205	G29	-9438	-285
26	G387	-11586	-375	86	G267	-10866	-375	146	G147	-10146	-375	206	G27	-9426	-375
27	G385	-11574	-465	87	G265	-10854	-465	147	G145	-10134	-465	207	G25	-9414	-465
28	G383	-11562	-285	88	G263	-10842	-285	148	G143	-10122	-285	208	G23	-9402	-285
29	G381	-11550	-375	89	G261	-10830	-375	149	G141	-10110	-375	209	G21	-9390	-375
30	G379	-11538	-465	90	G259	-10818	-465	150	G139	-10098	-465	210	G19	-9378	-465
31	G377	-11526	-285	91	G257	-10806	-285	151	G137	-10086	-285	211	G17	-9366	-285
32	G375	-11514	-375	92	G255	-10794	-375	152	G135	-10074	-375	212	G15	-9354	-375
33	G373	-11502	-465	93	G253	-10782	-465	153	G133	-10062	-465	213	G13	-9342	-465
34	G371	-11490	-285	94	G251	-10770	-285	154	G131	-10050	-285	214	G11	-9330	-285
35	G369	-11478	-375	95	G249	-10758	-375	155	G129	-10038	-375	215	G9	-9318	-375
36	G367	-11466	-465	96	G247	-10746	-465	156	G127	-10026	-465	216	G7	-9306	-465
37	G365	-11454	-285	97	G245	-10734	-285	157	G125	-10014	-285	217	G5	-9294	-285
38	G363	-11442	-375	98	G243	-10722	-375	158	G123	-10002	-375	218	G3	-9282	-375
39	G361	-11430	-465	99	G241	-10710	-465	159	G121	-9990	-465	219	G1	-9270	-465
40	G359	-11418	-285	100	G239	-10698	-285	160	G119	-9978	-285	220	DUMMY	-9258	-285
41	G357	-11406	-375	101	G237	-10686	-375	161	G117	-9966	-375	221	DUMMY	-9246	-375
42	G355	-11394	-465	102	G235	-10674	-465	162	G115	-9954	-465	222	DUMMY	-9234	-465
43	G353	-11382	-285	103	G233	-10662	-285	163	G113	-9942	-285	223	DUMMYR1	-9150	-447.5
44	G351	-11370	-375	104	G231	-10650	-375	164	G111	-9930	-375	224	DUMMYR2	-9075	-447.5
45	G349	-11358	-465	105	G229	-10638	-465	165	G109	-9918	-465	225	PVSS	-9000	-447.5
46	G347	-11346	-285	106	G227	-10626	-285	166	G107	-9906	-285	226	PVSS	-8925	-447.5
47	G345	-11334	-375	107	G225	-10614	-375	167	G105	-9894	-375	227	PVSS	-8850	-447.5
48	G343	-11322	-465	108	G223	-10602	-465	168	G103	-9882	-465	228	PVSS	-8775	-447.5
49	G341	-11310	-285	109	G221	-10590	-285	169	G101	-9870	-285	229	PVSS	-8700	-447.5
50	G339	-11298	-375	110	G219	-10578	-375	170	G99	-9858	-375	230	VSSA	-8625	-447.5
51	G337	-11286	-465	111	G217	-10566	-465	171	G97	-9846	-465	231	VSSA	-8550	-447.5
52	G335	-11274	-285	112	G215	-10554	-285	172	G95	-9834	-285	232	VSSA	-8475	-447.5
53	G333	-11262	-375	113	G213	-10542	-375	173	G93	-9822	-375	233	VSSA	-8400	-447.5
54	G331	-11250	-465	114	G211	-10530	-465	174	G91	-9810	-465	234	VSSA	-8325	-447.5
55	G329	-11238	-285	115	G209	-10518	-285	175	G89	-9798	-285	235	VSSA	-8250	-447.5
56	G327	-11226	-375	116	G207	-10506	-375	176	G87	-9786	-375	236	VSSA	-8175	-447.5
57	G325	-11214	-465	117	G205	-10494	-465	177	G85	-9774	-465	237	VTESTOUTP	-8100	-447.5
58	G323	-11202	-285	118	G203	-10482	-285	178	G83	-9762	-285	238	DSI_VSS	-8025	-447.5
59	G321	-11190	-375	119	G201	-10470	-375	179	G81	-9750	-375	239	DSI_D1N	-7950	-447.5
60	G319	-11178	-465	120	G199	-10458	-465	180	G79	-9738	-465	240	DSI_D1N	-7875	-447.5

Himax Confidential
Do Not Copy

No.	Name	X	Y	No.	Name	X	Y	No.	Name	X	Y	No.	Name	X	Y
241	DSI_D1N	-7800	-447.5	301	DB20	-3300	-447.5	361	VDDD	1200	-447.5	421	VSP	5700	-447.5
242	DSI_D1N	-7725	-447.5	302	DB19	-3225	-447.5	362	VDDD	1275	-447.5	422	VSP	5775	-447.5
243	DSI_D1P	-7650	-447.5	303	DB18	-3150	-447.5	363	VDDD	1350	-447.5	423	C21AP	5850	-447.5
244	DSI_D1P	-7575	-447.5	304	DB17	-3075	-447.5	364	VDDD	1425	-447.5	424	C21AP	5925	-447.5
245	DSI_D1P	-7500	-447.5	305	DB16	-3000	-447.5	365	VSSD	1500	-447.5	425	C21AP	6000	-447.5
246	DSI_D1P	-7425	-447.5	306	VSSD	-2925	-447.5	366	VSSD	1575	-447.5	426	C21AP	6075	-447.5
247	DSI_VSS	-7350	-447.5	307	DB15	-2850	-447.5	367	VSSD	1650	-447.5	427	C21AN	6150	-447.5
248	DSI_CP	-7275	-447.5	308	DB14	-2775	-447.5	368	VSSD	1725	-447.5	428	C21AN	6225	-447.5
249	DSI_CP	-7200	-447.5	309	DB13	-2700	-447.5	369	VSSD	1800	-447.5	429	C21AN	6300	-447.5
250	DSI_CP	-7125	-447.5	310	DB12	-2625	-447.5	370	VSSD	1875	-447.5	430	C21AN	6375	-447.5
251	DSI_CP	-7050	-447.5	311	DB11	-2550	-447.5	371	VSSD	1950	-447.5	431	C22AP	6450	-447.5
252	DSI_CN	-6975	-447.5	312	DB10	-2475	-447.5	372	VSSD	2025	-447.5	432	C22AP	6525	-447.5
253	DSI_CN	-6900	-447.5	313	DB9	-2400	-447.5	373	VSSD	2100	-447.5	433	C22AP	6600	-447.5
254	DSI_CN	-6825	-447.5	314	DB8	-2325	-447.5	374	VSSD	2175	-447.5	434	C22AP	6675	-447.5
255	DSI_CN	-6750	-447.5	315	VSSD	-2250	-447.5	375	PCCS1	2250	-447.5	435	C22AN	6750	-447.5
256	DSI_VSS	-6675	-447.5	316	DB7	-2175	-447.5	376	PCCS0	2325	-447.5	436	C22AN	6825	-447.5
257	DSI_D0N	-6600	-447.5	317	DB6	-2100	-447.5	377	VDD2	2400	-447.5	437	C22AN	6900	-447.5
258	DSI_D0N	-6525	-447.5	318	DB5	-2025	-447.5	378	VDD2	2475	-447.5	438	C22AN	6975	-447.5
259	DSI_D0N	-6450	-447.5	319	DB4	-1950	-447.5	379	VDD2	2550	-447.5	439	VGL	7050	-447.5
260	DSI_D0N	-6375	-447.5	320	DB3	-1875	-447.5	380	VDD3	2625	-447.5	440	VGL	7125	-447.5
261	DSI_D0P	-6300	-447.5	321	DB2	-1800	-447.5	381	VDD3	2700	-447.5	441	VGL	7200	-447.5
262	DSI_D0P	-6225	-447.5	322	DB1	-1725	-447.5	382	VDD3	2775	-447.5	442	VGL	7275	-447.5
263	DSI_D0P	-6150	-447.5	323	DB0	-1650	-447.5	383	VDD3	2850	-447.5	443	VGL	7350	-447.5
264	DSI_D0P	-6075	-447.5	324	HSYNC	-1575	-447.5	384	VDD3	2925	-447.5	444	VGH	7425	-447.5
265	DSI_VSS	-6000	-447.5	325	VSYNC	-1500	-447.5	385	VDD3	3000	-447.5	445	VGH	7500	-447.5
266	DSI_VSS	-5925	-447.5	326	ENABLE	-1425	-447.5	386	VDD3	3075	-447.5	446	VGH	7575	-447.5
267	DSI_VSS	-5850	-447.5	327	DCK	-1350	-447.5	387	VDD3	3150	-447.5	447	VGH	7650	-447.5
268	DSI_VSS	-5775	-447.5	328	VSSD	-1275	-447.5	388	VDD3	3225	-447.5	448	VGH	7725	-447.5
269	DSI_LDO	-5700	-447.5	329	NCS	-1200	-447.5	389	DUMMY	3300	-447.5	449	VSSAC	7800	-447.5
270	DSI_LDO	-5625	-447.5	330	SCL	-1125	-447.5	390	VCSW2	3375	-447.5	450	VSSAC	7875	-447.5
271	DSI_LDO	-5550	-447.5	331	SDI	-1050	-447.5	391	VCSW2	3450	-447.5	451	VSSAC	7950	-447.5
272	DSI_LDO	-5475	-447.5	332	SDO	-975	-447.5	392	VCSW2	3525	-447.5	452	VREF	8025	-447.5
273	DSI_VCC	-5400	-447.5	333	SDO	-900	-447.5	393	VCSW2	3600	-447.5	453	VREF	8100	-447.5
274	DSI_VCC	-5325	-447.5	334	SDO	-825	-447.5	394	VCSW1	3675	-447.5	454	VSSA	8175	-447.5
275	DSI_VCC	-5250	-447.5	335	CABC_PWM_OUT	-750	-447.5	395	VCSW1	3750	-447.5	455	VSSA	8250	-447.5
276	VSSD	-5175	-447.5	336	CABC_PWM_OUT	-675	-447.5	396	VCSW1	3825	-447.5	456	VSSA	8325	-447.5
277	VSSD	-5100	-447.5	337	NRESET	-600	-447.5	397	VCSW1	3900	-447.5	457	VSSA	8400	-447.5
278	VSSD	-5025	-447.5	338	NRESET	-525	-447.5	398	VCSW1	3975	-447.5	458	VSSA	8475	-447.5
279	VSSD	-4950	-447.5	339	NRESET	-450	-447.5	399	DUMMY	4050	-447.5	459	VSSA	8550	-447.5
280	VSSD	-4875	-447.5	340	TEST0	-375	-447.5	400	VDDDN	4125	-447.5	460	VSSA	8625	-447.5
281	VSSD	-4800	-447.5	341	TEST1	-300	-447.5	401	VDDDN	4200	-447.5	461	VCOM	8700	-447.5
282	VSSD	-4725	-447.5	342	TEST2	-225	-447.5	402	VDDDN	4275	-447.5	462	VCOM	8775	-447.5
283	VSSD	-4650	-447.5	343	VSSD	-150	-447.5	403	VDDDN	4350	-447.5	463	VCOM	8850	-447.5
284	TS7	-4575	-447.5	344	RSO0	-75	-447.5	404	VSNR	4425	-447.5	464	VCOM	8925	-447.5
285	TS6	-4500	-447.5	345	VDD1	0	-447.5	405	VSNR	4500	-447.5	465	VCOM	9000	-447.5
286	TS5	-4425	-447.5	346	RSO1	75	-447.5	406	VSPR	4575	-447.5	466	VCOMR	9075	-447.5
287	TS4	-4350	-447.5	347	VSSD	150	-447.5	407	VSPR	4650	-447.5	467	DUMMY	9150	-447.5
288	TS3	-4275	-447.5	348	RSO2	225	-447.5	408	VTESTOUTN	4725	-447.5	468	DUMMY	9234	-285
289	TS2	-4200	-447.5	349	VDD1	300	-447.5	409	VSN	4800	-447.5	469	DUMMY	9246	-375
290	TS1	-4125	-447.5	350	BS0	375	-447.5	410	VSN	4875	-447.5	470	DUMMY	9258	-465
291	TS0	-4050	-447.5	351	VSSD	450	-447.5	411	VSN	4950	-447.5	471	G2	9270	-285
292	OSC	-3975	-447.5	352	BS1	525	-447.5	412	VSN	5025	-447.5	472	G4	9282	-375
293	VSSD	-3900	-447.5	353	VDD1	600	-447.5	413	VSN	5100	-447.5	473	G6	9294	-465
294	DSI_LDO_EN	-3825	-447.5	354	VDD1	675	-447.5	414	VSN	5175	-447.5	474	G8	9306	-285
295	VDD1	-3750	-447.5	355	VDD1	750	-447.5	415	VSNC	5250	-447.5	475	G10	9318	-375
296	DUMMY	-3675	-447.5	356	VDD1	825	-447.5	416	VSPC	5325	-447.5	476	G12	9330	-465
297	VSSD	-3600	-447.5	357	VDD1	900	-447.5	417	VSP	5400	-447.5	477	G14	9342	-285
298	DB23	-3525	-447.5	358	VDD1	975	-447.5	418	VSP	5475	-447.5	478	G16	9354	-375
299	DB22	-3450	-447.5	359	VDDD	1050	-447.5	419	VSP	5550	-447.5	479	G18	9366	-465
300	DB21	-3375	-447.5	360	VDDD	1125	-447.5	420	VSP	5625	-447.5	480	G20	9378	-285

Himax Confidential
Do Not Copy

No.	Name	X	Y	No.	Name	X	Y	No.	Name	X	Y	No.	Name	X	Y
481	G22	9390	-375	541	G142	10110	-375	601	G262	10830	-375	661	G382	11550	-375
482	G24	9402	-465	542	G144	10122	-465	602	G264	10842	-465	662	G384	11562	-465
483	G26	9414	-285	543	G146	10134	-285	603	G266	10854	-285	663	G386	11574	-285
484	G28	9426	-375	544	G148	10146	-375	604	G268	10866	-375	664	G388	11586	-375
485	G30	9438	-465	545	G150	10158	-465	605	G270	10878	-465	665	G390	11598	-465
486	G32	9450	-285	546	G152	10170	-285	606	G272	10890	-285	666	G392	11610	-285
487	G34	9462	-375	547	G154	10182	-375	607	G274	10902	-375	667	G394	11622	-375
488	G36	9474	-465	548	G156	10194	-465	608	G276	10914	-465	668	G396	11634	-465
489	G38	9486	-285	549	G158	10206	-285	609	G278	10926	-285	669	G398	11646	-285
490	G40	9498	-375	550	G160	10218	-375	610	G280	10938	-375	670	G400	11658	-375
491	G42	9510	-465	551	G162	10230	-465	611	G282	10950	-465	671	G402	11670	-465
492	G44	9522	-285	552	G164	10242	-285	612	G284	10962	-285	672	G404	11682	-285
493	G46	9534	-375	553	G166	10254	-375	613	G286	10974	-375	673	G406	11694	-375
494	G48	9546	-465	554	G168	10266	-465	614	G288	10986	-465	674	G408	11706	-465
495	G50	9558	-285	555	G170	10278	-285	615	G290	10998	-285	675	G410	11718	-285
496	G52	9570	-375	556	G172	10290	-375	616	G292	11010	-375	676	G412	11730	-375
497	G54	9582	-465	557	G174	10302	-465	617	G294	11022	-465	677	G414	11742	-465
498	G56	9594	-285	558	G176	10314	-285	618	G296	11034	-285	678	G416	11754	-285
499	G58	9606	-375	559	G178	10326	-375	619	G298	11046	-375	679	G418	11766	-375
500	G60	9618	-465	560	G180	10338	-465	620	G300	11058	-465	680	G420	11778	-465
501	G62	9630	-285	561	G182	10350	-285	621	G302	11070	-285	681	G422	11790	-285
502	G64	9642	-375	562	G184	10362	-375	622	G304	11082	-375	682	G424	11802	-375
503	G66	9654	-465	563	G186	10374	-465	623	G306	11094	-465	683	G426	11814	-465
504	G68	9666	-285	564	G188	10386	-285	624	G308	11106	-285	684	G428	11826	-285
505	G70	9678	-375	565	G190	10398	-375	625	G310	11118	-375	685	G430	11838	-375
506	G72	9690	-465	566	G192	10410	-465	626	G312	11130	-465	686	G432	11850	-465
507	G74	9702	-285	567	G194	10422	-285	627	G314	11142	-285	687	DUMMY	11862	-285
508	G76	9714	-375	568	G196	10434	-375	628	G316	11154	-375	688	DUMMY	11874	-375
509	G78	9726	-465	569	G198	10446	-465	629	G318	11166	-465	689	DUMMY	11886	-465
510	G80	9738	-285	570	G200	10458	-285	630	G320	11178	-285	690	DUMMY	11886	285
511	G82	9750	-375	571	G202	10470	-375	631	G322	11190	-375	691	DUMMY	11874	375
512	G84	9762	-465	572	G204	10482	-465	632	G324	11202	-465	692	DUMMY	11862	465
513	G86	9774	-285	573	G206	10494	-285	633	G326	11214	-285	693	G434	11850	285
514	G88	9786	-375	574	G208	10506	-375	634	G328	11226	-375	694	G436	11838	375
515	G90	9798	-465	575	G210	10518	-465	635	G330	11238	-465	695	G438	11826	465
516	G92	9810	-285	576	G212	10530	-285	636	G332	11250	-285	696	G440	11814	285
517	G94	9822	-375	577	G214	10542	-375	637	G334	11262	-375	697	G442	11802	375
518	G96	9834	-465	578	G216	10554	-465	638	G336	11274	-465	698	G444	11790	465
519	G98	9846	-285	579	G218	10566	-285	639	G338	11286	-285	699	G446	11778	285
520	G100	9858	-375	580	G220	10578	-375	640	G340	11298	-375	700	G448	11766	375
521	G102	9870	-465	581	G222	10590	-465	641	G342	11310	-465	701	G450	11754	465
522	G104	9882	-285	582	G224	10602	-285	642	G344	11322	-285	702	G452	11742	285
523	G106	9894	-375	583	G226	10614	-375	643	G346	11334	-375	703	G454	11730	375
524	G108	9906	-465	584	G228	10626	-465	644	G348	11346	-465	704	G456	11718	465
525	G110	9918	-285	585	G230	10638	-285	645	G350	11358	-285	705	G458	11706	285
526	G112	9930	-375	586	G232	10650	-375	646	G352	11370	-375	706	G460	11694	375
527	G114	9942	-465	587	G234	10662	-465	647	G354	11382	-465	707	G462	11682	465
528	G116	9954	-285	588	G236	10674	-285	648	G356	11394	-285	708	G464	11670	285
529	G118	9966	-375	589	G238	10686	-375	649	G358	11406	-375	709	G466	11658	375
530	G120	9978	-465	590	G240	10698	-465	650	G360	11418	-465	710	G468	11646	465
531	G122	9990	-285	591	G242	10710	-285	651	G362	11430	-285	711	G470	11634	285
532	G124	10002	-375	592	G244	10722	-375	652	G364	11442	-375	712	G472	11622	375
533	G126	10014	-465	593	G246	10734	-465	653	G366	11454	-465	713	G474	11610	465
534	G128	10026	-285	594	G248	10746	-285	654	G368	11466	-285	714	G476	11598	285
535	G130	10038	-375	595	G250	10758	-375	655	G370	11478	-375	715	G478	11586	375
536	G132	10050	-465	596	G252	10770	-465	656	G372	11490	-465	716	G480	11574	465
537	G134	10062	-285	597	G254	10782	-285	657	G374	11502	-285	717	G482	11562	285
538	G136	10074	-375	598	G256	10794	-375	658	G376	11514	-375	718	G484	11550	375
539	G138	10086	-465	599	G258	10806	-465	659	G378	11526	-465	719	G486	11538	465
540	G140	10098	-285	600	G260	10818	-285	660	G380	11538	-285	720	G488	11526	285

Himax Confidential
Do Not Copy

This information contained herein is the exclusive property of Himax and shall not be distributed, reproduced, or disclosed in whole or in part without prior written permission of Himax.

No.	Name	X	Y	No.	Name	X	Y	No.	Name	X	Y	No.	Name	X	Y
721	G490	11514	375	781	G610	10794	375	841	G730	10074	375	901	G850	9354	375
722	G492	11502	465	782	G612	10782	465	842	G732	10062	465	902	G852	9342	465
723	G494	11490	285	783	G614	10770	285	843	G734	10050	285	903	G854	9330	285
724	G496	11478	375	784	G616	10758	375	844	G736	10038	375	904	G856	9318	375
725	G498	11466	465	785	G618	10746	465	845	G738	10026	465	905	G858	9306	465
726	G500	11454	285	786	G620	10734	285	846	G740	10014	285	906	G860	9294	285
727	G502	11442	375	787	G622	10722	375	847	G742	10002	375	907	G862	9282	375
728	G504	11430	465	788	G624	10710	465	848	G744	9990	465	908	G864	9270	465
729	G506	11418	285	789	G626	10698	285	849	G746	9978	285	909	VGL	9222	285
730	G508	11406	375	790	G628	10686	375	850	G748	9966	375	910	VGL	9210	375
731	G510	11394	465	791	G630	10674	465	851	G750	9954	465	911	VGL	9198	465
732	G512	11382	285	792	G632	10662	285	852	G752	9942	285	912	VCOM	9150	285
733	G514	11370	375	793	G634	10650	375	853	G754	9930	375	913	VCOM	9138	375
734	G516	11358	465	794	G636	10638	465	854	G756	9918	465	914	VCOM	9126	465
735	G518	11346	285	795	G638	10626	285	855	G758	9906	285	915	VCOM	9114	285
736	G520	11334	375	796	G640	10614	375	856	G760	9894	375	916	VCOM	9102	375
737	G522	11322	465	797	G642	10602	465	857	G762	9882	465	917	VCOM	9090	465
738	G524	11310	285	798	G644	10590	285	858	G764	9870	285	918	DUMMY	8922	285
739	G526	11298	375	799	G646	10578	375	859	G766	9858	375	919	DUMMY	8910	375
740	G528	11286	465	800	G648	10566	465	860	G768	9846	465	920	DUMMY	8898	465
741	G530	11274	285	801	G650	10554	285	861	G770	9834	285	921	S1440	8886	285
742	G532	11262	375	802	G652	10542	375	862	G772	9822	375	922	S1439	8874	375
743	G534	11250	465	803	G654	10530	465	863	G774	9810	465	923	S1438	8862	465
744	G536	11238	285	804	G656	10518	285	864	G776	9798	285	924	S1437	8850	285
745	G538	11226	375	805	G658	10506	375	865	G778	9786	375	925	S1436	8838	375
746	G540	11214	465	806	G660	10494	465	866	G780	9774	465	926	S1435	8826	465
747	G542	11202	285	807	G662	10482	285	867	G782	9762	285	927	S1434	8814	285
748	G544	11190	375	808	G664	10470	375	868	G784	9750	375	928	S1433	8802	375
749	G546	11178	465	809	G666	10458	465	869	G786	9738	465	929	S1432	8790	465
750	G548	11166	285	810	G668	10446	285	870	G788	9726	285	930	S1431	8778	285
751	G550	11154	375	811	G670	10434	375	871	G790	9714	375	931	S1430	8766	375
752	G552	11142	465	812	G672	10422	465	872	G792	9702	465	932	S1429	8754	465
753	G554	11130	285	813	G674	10410	285	873	G794	9690	285	933	S1428	8742	285
754	G556	11118	375	814	G676	10398	375	874	G796	9678	375	934	S1427	8730	375
755	G558	11106	465	815	G678	10386	465	875	G798	9666	465	935	S1426	8718	465
756	G560	11094	285	816	G680	10374	285	876	G800	9654	285	936	S1425	8706	285
757	G562	11082	375	817	G682	10362	375	877	G802	9642	375	937	S1424	8694	375
758	G564	11070	465	818	G684	10350	465	878	G804	9630	465	938	S1423	8682	465
759	G566	11058	285	819	G686	10338	285	879	G806	9618	285	939	S1422	8670	285
760	G568	11046	375	820	G688	10326	375	880	G808	9606	375	940	S1421	8658	375
761	G570	11034	465	821	G690	10314	465	881	G810	9594	465	941	S1420	8646	465
762	G572	11022	285	822	G692	10302	285	882	G812	9582	285	942	S1419	8634	285
763	G574	11010	375	823	G694	10290	375	883	G814	9570	375	943	S1418	8622	375
764	G576	10998	465	824	G696	10278	465	884	G816	9558	465	944	S1417	8610	465
765	G578	10986	285	825	G698	10266	285	885	G818	9546	285	945	S1416	8598	285
766	G580	10974	375	826	G700	10254	375	886	G820	9534	375	946	S1415	8586	375
767	G582	10962	465	827	G702	10242	465	887	G822	9522	465	947	S1414	8574	465
768	G584	10950	285	828	G704	10230	285	888	G824	9510	285	948	S1413	8562	285
769	G586	10938	375	829	G706	10218	375	889	G826	9498	375	949	S1412	8550	375
770	G588	10926	465	830	G708	10206	465	890	G828	9486	465	950	S1411	8538	465
771	G590	10914	285	831	G710	10194	285	891	G830	9474	285	951	S1410	8526	285
772	G592	10902	375	832	G712	10182	375	892	G832	9462	375	952	S1409	8514	375
773	G594	10890	465	833	G714	10170	465	893	G834	9450	465	953	S1408	8502	465
774	G596	10878	285	834	G716	10158	285	894	G836	9438	285	954	S1407	8490	285
775	G598	10866	375	835	G718	10146	375	895	G838	9426	375	955	S1406	8478	375
776	G600	10854	465	836	G720	10134	465	896	G840	9414	465	956	S1405	8466	465
777	G602	10842	285	837	G722	10122	285	897	G842	9402	285	957	S1404	8454	285
778	G604	10830	375	838	G724	10110	375	898	G844	9390	375	958	S1403	8442	375
779	G606	10818	465	839	G726	10098	465	899	G846	9378	465	959	S1402	8430	465
780	G608	10806	285	840	G728	10086	285	900	G848	9366	285	960	S1401	8418	285

Himax Confidential
Do Not Copy

No.	Name	X	Y	No.	Name	X	Y	No.	Name	X	Y	No.	Name	X	Y
961	S1400	8406	375	1021	S1340	7686	375	1081	S1280	6966	375	1141	S1220	6246	375
962	S1399	8394	465	1022	S1339	7674	465	1082	S1279	6954	465	1142	S1219	6234	465
963	S1398	8382	285	1023	S1338	7662	285	1083	S1278	6942	285	1143	S1218	6222	285
964	S1397	8370	375	1024	S1337	7650	375	1084	S1277	6930	375	1144	S1217	6210	375
965	S1396	8358	465	1025	S1336	7638	465	1085	S1276	6918	465	1145	S1216	6198	465
966	S1395	8346	285	1026	S1335	7626	285	1086	S1275	6906	285	1146	S1215	6186	285
967	S1394	8334	375	1027	S1334	7614	375	1087	S1274	6894	375	1147	S1214	6174	375
968	S1393	8322	465	1028	S1333	7602	465	1088	S1273	6882	465	1148	S1213	6162	465
969	S1392	8310	285	1029	S1332	7590	285	1089	S1272	6870	285	1149	S1212	6150	285
970	S1391	8298	375	1030	S1331	7578	375	1090	S1271	6858	375	1150	S1211	6138	375
971	S1390	8286	465	1031	S1330	7566	465	1091	S1270	6846	465	1151	S1210	6126	465
972	S1389	8274	285	1032	S1329	7554	285	1092	S1269	6834	285	1152	S1209	6114	285
973	S1388	8262	375	1033	S1328	7542	375	1093	S1268	6822	375	1153	S1208	6102	375
974	S1387	8250	465	1034	S1327	7530	465	1094	S1267	6810	465	1154	S1207	6090	465
975	S1386	8238	285	1035	S1326	7518	285	1095	S1266	6798	285	1155	S1206	6078	285
976	S1385	8226	375	1036	S1325	7506	375	1096	S1265	6786	375	1156	S1205	6066	375
977	S1384	8214	465	1037	S1324	7494	465	1097	S1264	6774	465	1157	S1204	6054	465
978	S1383	8202	285	1038	S1323	7482	285	1098	S1263	6762	285	1158	S1203	6042	285
979	S1382	8190	375	1039	S1322	7470	375	1099	S1262	6750	375	1159	S1202	6030	375
980	S1381	8178	465	1040	S1321	7458	465	1100	S1261	6738	465	1160	S1201	6018	465
981	S1380	8166	285	1041	S1320	7446	285	1101	S1260	6726	285	1161	S1200	6006	285
982	S1379	8154	375	1042	S1319	7434	375	1102	S1259	6714	375	1162	S1199	5994	375
983	S1378	8142	465	1043	S1318	7422	465	1103	S1258	6702	465	1163	S1198	5982	465
984	S1377	8130	285	1044	S1317	7410	285	1104	S1257	6690	285	1164	S1197	5970	285
985	S1376	8118	375	1045	S1316	7398	375	1105	S1256	6678	375	1165	S1196	5958	375
986	S1375	8106	465	1046	S1315	7386	465	1106	S1255	6666	465	1166	S1195	5946	465
987	S1374	8094	285	1047	S1314	7374	285	1107	S1254	6654	285	1167	S1194	5934	285
988	S1373	8082	375	1048	S1313	7362	375	1108	S1253	6642	375	1168	S1193	5922	375
989	S1372	8070	465	1049	S1312	7350	465	1109	S1252	6630	465	1169	S1192	5910	465
990	S1371	8058	285	1050	S1311	7338	285	1110	S1251	6618	285	1170	S1191	5898	285
991	S1370	8046	375	1051	S1310	7326	375	1111	S1250	6606	375	1171	S1190	5886	375
992	S1369	8034	465	1052	S1309	7314	465	1112	S1249	6594	465	1172	S1189	5874	465
993	S1368	8022	285	1053	S1308	7302	285	1113	S1248	6582	285	1173	S1188	5862	285
994	S1367	8010	375	1054	S1307	7290	375	1114	S1247	6570	375	1174	S1187	5850	375
995	S1366	7998	465	1055	S1306	7278	465	1115	S1246	6558	465	1175	S1186	5838	465
996	S1365	7986	285	1056	S1305	7266	285	1116	S1245	6546	285	1176	S1185	5826	285
997	S1364	7974	375	1057	S1304	7254	375	1117	S1244	6534	375	1177	S1184	5814	375
998	S1363	7962	465	1058	S1303	7242	465	1118	S1243	6522	465	1178	S1183	5802	465
999	S1362	7950	285	1059	S1302	7230	285	1119	S1242	6510	285	1179	S1182	5790	285
1000	S1361	7938	375	1060	S1301	7218	375	1120	S1241	6498	375	1180	S1181	5778	375
1001	S1360	7926	465	1061	S1300	7206	465	1121	S1240	6486	465	1181	S1180	5766	465
1002	S1359	7914	285	1062	S1299	7194	285	1122	S1239	6474	285	1182	S1179	5754	285
1003	S1358	7902	375	1063	S1298	7182	375	1123	S1238	6462	375	1183	S1178	5742	375
1004	S1357	7890	465	1064	S1297	7170	465	1124	S1237	6450	465	1184	S1177	5730	465
1005	S1356	7878	285	1065	S1296	7158	285	1125	S1236	6438	285	1185	S1176	5718	285
1006	S1355	7866	375	1066	S1295	7146	375	1126	S1235	6426	375	1186	S1175	5706	375
1007	S1354	7854	465	1067	S1294	7134	465	1127	S1234	6414	465	1187	S1174	5694	465
1008	S1353	7842	285	1068	S1293	7122	285	1128	S1233	6402	285	1188	S1173	5682	285
1009	S1352	7830	375	1069	S1292	7110	375	1129	S1232	6390	375	1189	S1172	5670	375
1010	S1351	7818	465	1070	S1291	7098	465	1130	S1231	6378	465	1190	S1171	5658	465
1011	S1350	7806	285	1071	S1290	7086	285	1131	S1230	6366	285	1191	S1170	5646	285
1012	S1349	7794	375	1072	S1289	7074	375	1132	S1229	6354	375	1192	S1169	5634	375
1013	S1348	7782	465	1073	S1288	7062	465	1133	S1228	6342	465	1193	S1168	5622	465
1014	S1347	7770	285	1074	S1287	7050	285	1134	S1227	6330	285	1194	S1167	5610	285
1015	S1346	7758	375	1075	S1286	7038	375	1135	S1226	6318	375	1195	S1166	5598	375
1016	S1345	7746	465	1076	S1285	7026	465	1136	S1225	6306	465	1196	S1165	5586	465
1017	S1344	7734	285	1077	S1284	7014	285	1137	S1224	6294	285	1197	S1164	5574	285
1018	S1343	7722	375	1078	S1283	7002	375	1138	S1223	6282	375	1198	S1163	5562	375
1019	S1342	7710	465	1079	S1282	6990	465	1139	S1222	6270	465	1199	S1162	5550	465
1020	S1341	7698	285	1080	S1281	6978	285	1140	S1221	6258	285	1200	S1161	5538	285

Himax Confidential Do Not Copy

This information contained herein is the exclusive property of Himax and shall not be distributed, reproduced, or disclosed in whole or in part without prior written permission of Himax.

No.	Name	X	Y	No.	Name	X	Y	No.	Name	X	Y	No.	Name	X	Y
1201	S1160	5526	375	1261	S1100	4806	375	1321	S1051	3966	465	1381	S991	3246	465
1202	S1159	5514	465	1262	S1099	4794	465	1322	S1050	3954	285	1382	S990	3234	285
1203	S1158	5502	285	1263	S1098	4782	285	1323	S1049	3942	375	1383	S989	3222	375
1204	S1157	5490	375	1264	S1097	4770	375	1324	S1048	3930	465	1384	S988	3210	465
1205	S1156	5478	465	1265	S1096	4758	465	1325	S1047	3918	285	1385	S987	3198	285
1206	S1155	5466	285	1266	S1095	4746	285	1326	S1046	3906	375	1386	S986	3186	375
1207	S1154	5454	375	1267	S1094	4734	375	1327	S1045	3894	465	1387	S985	3174	465
1208	S1153	5442	465	1268	S1093	4722	465	1328	S1044	3882	285	1388	S984	3162	285
1209	S1152	5430	285	1269	S1092	4710	285	1329	S1043	3870	375	1389	S983	3150	375
1210	S1151	5418	375	1270	S1091	4698	375	1330	S1042	3858	465	1390	S982	3138	465
1211	S1150	5406	465	1271	S1090	4686	465	1331	S1041	3846	285	1391	S981	3126	285
1212	S1149	5394	285	1272	S1089	4674	285	1332	S1040	3834	375	1392	S980	3114	375
1213	S1148	5382	375	1273	S1088	4662	375	1333	S1039	3822	465	1393	S979	3102	465
1214	S1147	5370	465	1274	S1087	4650	465	1334	S1038	3810	285	1394	S978	3090	285
1215	S1146	5358	285	1275	S1086	4638	285	1335	S1037	3798	375	1395	S977	3078	375
1216	S1145	5346	375	1276	S1085	4626	375	1336	S1036	3786	465	1396	S976	3066	465
1217	S1144	5334	465	1277	S1084	4614	465	1337	S1035	3774	285	1397	S975	3054	285
1218	S1143	5322	285	1278	S1083	4602	285	1338	S1034	3762	375	1398	S974	3042	375
1219	S1142	5310	375	1279	S1082	4590	375	1339	S1033	3750	465	1399	S973	3030	465
1220	S1141	5298	465	1280	S1081	4578	465	1340	S1032	3738	285	1400	S972	3018	285
1221	S1140	5286	285	1281	DUMMY	4566	285	1341	S1031	3726	375	1401	S971	3006	375
1222	S1139	5274	375	1282	DUMMY	4554	375	1342	S1030	3714	465	1402	S970	2994	465
1223	S1138	5262	465	1283	DUMMY	4542	465	1343	S1029	3702	285	1403	S969	2982	285
1224	S1137	5250	285	1284	DUMMY	4506	465	1344	S1028	3690	375	1404	S968	2970	375
1225	S1136	5238	375	1285	DUMMY	4470	465	1345	S1027	3678	465	1405	S967	2958	465
1226	S1135	5226	465	1286	DUMMY	4434	465	1346	S1026	3666	285	1406	S966	2946	285
1227	S1134	5214	285	1287	DUMMY	4398	465	1347	S1025	3654	375	1407	S965	2934	375
1228	S1133	5202	375	1288	DUMMY	4362	465	1348	S1024	3642	465	1408	S964	2922	465
1229	S1132	5190	465	1289	DUMMY	4350	285	1349	S1023	3630	285	1409	S963	2910	285
1230	S1131	5178	285	1290	DUMMY	4338	375	1350	S1022	3618	375	1410	S962	2898	375
1231	S1130	5166	375	1291	DUMMY	4326	465	1351	S1021	3606	465	1411	S961	2886	465
1232	S1129	5154	465	1292	S1080	4314	285	1352	S1020	3594	285	1412	S960	2874	285
1233	S1128	5142	285	1293	S1079	4302	375	1353	S1019	3582	375	1413	S959	2862	375
1234	S1127	5130	375	1294	S1078	4290	465	1354	S1018	3570	465	1414	S958	2850	465
1235	S1126	5118	465	1295	S1077	4278	285	1355	S1017	3558	285	1415	S957	2838	285
1236	S1125	5106	285	1296	S1076	4266	375	1356	S1016	3546	375	1416	S956	2826	375
1237	S1124	5094	375	1297	S1075	4254	465	1357	S1015	3534	465	1417	S955	2814	465
1238	S1123	5082	465	1298	S1074	4242	285	1358	S1014	3522	285	1418	S954	2802	285
1239	S1122	5070	285	1299	S1073	4230	375	1359	S1013	3510	375	1419	S953	2790	375
1240	S1121	5058	375	1300	S1072	4218	465	1360	S1012	3498	465	1420	S952	2778	465
1241	S1120	5046	465	1301	S1071	4206	285	1361	S1011	3486	285	1421	S951	2766	285
1242	S1119	5034	285	1302	S1070	4194	375	1362	S1010	3474	375	1422	S950	2754	375
1243	S1118	5022	375	1303	S1069	4182	465	1363	S1009	3462	465	1423	S949	2742	465
1244	S1117	5010	465	1304	S1068	4170	285	1364	S1008	3450	285	1424	S948	2730	285
1245	S1116	4998	285	1305	S1067	4158	375	1365	S1007	3438	375	1425	S947	2718	375
1246	S1115	4986	375	1306	S1066	4146	465	1366	S1006	3426	465	1426	S946	2706	465
1247	S1114	4974	465	1307	S1065	4134	285	1367	S1005	3414	285	1427	S945	2694	285
1248	S1113	4962	285	1308	S1064	4122	375	1368	S1004	3402	375	1428	S944	2682	375
1249	S1112	4950	375	1309	S1063	4110	465	1369	S1003	3390	465	1429	S943	2670	465
1250	S1111	4938	465	1310	S1062	4098	285	1370	S1002	3378	285	1430	S942	2658	285
1251	S1110	4926	285	1311	S1061	4086	375	1371	S1001	3366	375	1431	S941	2646	375
1252	S1109	4914	375	1312	S1060	4074	465	1372	S1000	3354	465	1432	S940	2634	465
1253	S1108	4902	465	1313	S1059	4062	285	1373	S999	3342	285	1433	S939	2622	285
1254	S1107	4890	285	1314	S1058	4050	375	1374	S998	3330	375	1434	S938	2610	375
1255	S1106	4878	375	1315	S1057	4038	465	1375	S997	3318	465	1435	S937	2598	465
1256	S1105	4866	465	1316	S1056	4026	285	1376	S996	3306	285	1436	S936	2586	285
1257	S1104	4854	285	1317	S1055	4014	375	1377	S995	3294	375	1437	S935	2574	375
1258	S1103	4842	375	1318	S1054	4002	465	1378	S994	3282	465	1438	S934	2562	465
1259	S1102	4830	465	1319	S1053	3990	285	1379	S993	3270	285	1439	S933	2550	285
1260	S1101	4818	285	1320	S1052	3978	375	1380	S992	3258	375	1440	S932	2538	375

Himax Confidential
Do Not Copy

No.	Name	X	Y	No.	Name	X	Y	No.	Name	X	Y	No.	Name	X	Y
1441	S931	2526	465	1501	S871	1806	465	1561	S811	1086	465	1621	S751	366	465
1442	S930	2514	285	1502	S870	1794	285	1562	S810	1074	285	1622	S750	354	285
1443	S929	2502	375	1503	S869	1782	375	1563	S809	1062	375	1623	S749	342	375
1444	S928	2490	465	1504	S868	1770	465	1564	S808	1050	465	1624	S748	330	465
1445	S927	2478	285	1505	S867	1758	285	1565	S807	1038	285	1625	S747	318	285
1446	S926	2466	375	1506	S866	1746	375	1566	S806	1026	375	1626	S746	306	375
1447	S925	2454	465	1507	S865	1734	465	1567	S805	1014	465	1627	S745	294	465
1448	S924	2442	285	1508	S864	1722	285	1568	S804	1002	285	1628	S744	282	285
1449	S923	2430	375	1509	S863	1710	375	1569	S803	990	375	1629	S743	270	375
1450	S922	2418	465	1510	S862	1698	465	1570	S802	978	465	1630	S742	258	465
1451	S921	2406	285	1511	S861	1686	285	1571	S801	966	285	1631	S741	246	285
1452	S920	2394	375	1512	S860	1674	375	1572	S800	954	375	1632	S740	234	375
1453	S919	2382	465	1513	S859	1662	465	1573	S799	942	465	1633	S739	222	465
1454	S918	2370	285	1514	S858	1650	285	1574	S798	930	285	1634	S738	210	285
1455	S917	2358	375	1515	S857	1638	375	1575	S797	918	375	1635	S737	198	375
1456	S916	2346	465	1516	S856	1626	465	1576	S796	906	465	1636	S736	186	465
1457	S915	2334	285	1517	S855	1614	285	1577	S795	894	285	1637	S735	174	285
1458	S914	2322	375	1518	S854	1602	375	1578	S794	882	375	1638	S734	162	375
1459	S913	2310	465	1519	S853	1590	465	1579	S793	870	465	1639	S733	150	465
1460	S912	2298	285	1520	S852	1578	285	1580	S792	858	285	1640	S732	138	285
1461	S911	2286	375	1521	S851	1566	375	1581	S791	846	375	1641	S731	126	375
1462	S910	2274	465	1522	S850	1554	465	1582	S790	834	465	1642	S730	114	465
1463	S909	2262	285	1523	S849	1542	285	1583	S789	822	285	1643	S729	102	285
1464	S908	2250	375	1524	S848	1530	375	1584	S788	810	375	1644	S728	90	375
1465	S907	2238	465	1525	S847	1518	465	1585	S787	798	465	1645	S727	78	465
1466	S906	2226	285	1526	S846	1506	285	1586	S786	786	285	1646	S726	66	285
1467	S905	2214	375	1527	S845	1494	375	1587	S785	774	375	1647	S725	54	375
1468	S904	2202	465	1528	S844	1482	465	1588	S784	762	465	1648	S724	42	465
1469	S903	2190	285	1529	S843	1470	285	1589	S783	750	285	1649	S723	30	285
1470	S902	2178	375	1530	S842	1458	375	1590	S782	738	375	1650	S722	18	375
1471	S901	2166	465	1531	S841	1446	465	1591	S781	726	465	1651	S721	6	465
1472	S900	2154	285	1532	S840	1434	285	1592	S780	714	285	1652	S720	-6	285
1473	S899	2142	375	1533	S839	1422	375	1593	S779	702	375	1653	S719	-18	375
1474	S898	2130	465	1534	S838	1410	465	1594	S778	690	465	1654	S718	-30	465
1475	S897	2118	285	1535	S837	1398	285	1595	S777	678	285	1655	S717	-42	285
1476	S896	2106	375	1536	S836	1386	375	1596	S776	666	375	1656	S716	-54	375
1477	S895	2094	465	1537	S835	1374	465	1597	S775	654	465	1657	S715	-66	465
1478	S894	2082	285	1538	S834	1362	285	1598	S774	642	285	1658	S714	-78	285
1479	S893	2070	375	1539	S833	1350	375	1599	S773	630	375	1659	S713	-90	375
1480	S892	2058	465	1540	S832	1338	465	1600	S772	618	465	1660	S712	-102	465
1481	S891	2046	285	1541	S831	1326	285	1601	S771	606	285	1661	S711	-114	285
1482	S890	2034	375	1542	S830	1314	375	1602	S770	594	375	1662	S710	-126	375
1483	S889	2022	465	1543	S829	1302	465	1603	S769	582	465	1663	S709	-138	465
1484	S888	2010	285	1544	S828	1290	285	1604	S768	570	285	1664	S708	-150	285
1485	S887	1998	375	1545	S827	1278	375	1605	S767	558	375	1665	S707	-162	375
1486	S886	1986	465	1546	S826	1266	465	1606	S766	546	465	1666	S706	-174	465
1487	S885	1974	285	1547	S825	1254	285	1607	S765	534	285	1667	S705	-186	285
1488	S884	1962	375	1548	S824	1242	375	1608	S764	522	375	1668	S704	-198	375
1489	S883	1950	465	1549	S823	1230	465	1609	S763	510	465	1669	S703	-210	465
1490	S882	1938	285	1550	S822	1218	285	1610	S762	498	285	1670	S702	-222	285
1491	S881	1926	375	1551	S821	1206	375	1611	S761	486	375	1671	S701	-234	375
1492	S880	1914	465	1552	S820	1194	465	1612	S760	474	465	1672	S700	-246	465
1493	S879	1902	285	1553	S819	1182	285	1613	S759	462	285	1673	S699	-258	285
1494	S878	1890	375	1554	S818	1170	375	1614	S758	450	375	1674	S698	-270	375
1495	S877	1878	465	1555	S817	1158	465	1615	S757	438	465	1675	S697	-282	465
1496	S876	1866	285	1556	S816	1146	285	1616	S756	426	285	1676	S696	-294	285
1497	S875	1854	375	1557	S815	1134	375	1617	S755	414	375	1677	S695	-306	375
1498	S874	1842	465	1558	S814	1122	465	1618	S754	402	465	1678	S694	-318	465
1499	S873	1830	285	1559	S813	1110	285	1619	S753	390	285	1679	S693	-330	285
1500	S872	1818	375	1560	S812	1098	375	1620	S752	378	375	1680	S692	-342	375

Himax Confidential
Do Not Copy

No.	Name	X	Y	No.	Name	X	Y	No.	Name	X	Y	No.	Name	X	Y
1681	S691	-354	465	1741	S631	-1074	465	1801	S571	-1794	465	1861	S511	-2514	465
1682	S690	-366	285	1742	S630	-1086	285	1802	S570	-1806	285	1862	S510	-2526	285
1683	S689	-378	375	1743	S629	-1098	375	1803	S569	-1818	375	1863	S509	-2538	375
1684	S688	-390	465	1744	S628	-1110	465	1804	S568	-1830	465	1864	S508	-2550	465
1685	S687	-402	285	1745	S627	-1122	285	1805	S567	-1842	285	1865	S507	-2562	285
1686	S686	-414	375	1746	S626	-1134	375	1806	S566	-1854	375	1866	S506	-2574	375
1687	S685	-426	465	1747	S625	-1146	465	1807	S565	-1866	465	1867	S505	-2586	465
1688	S684	-438	285	1748	S624	-1158	285	1808	S564	-1878	285	1868	S504	-2598	285
1689	S683	-450	375	1749	S623	-1170	375	1809	S563	-1890	375	1869	S503	-2610	375
1690	S682	-462	465	1750	S622	-1182	465	1810	S562	-1902	465	1870	S502	-2622	465
1691	S681	-474	285	1751	S621	-1194	285	1811	S561	-1914	285	1871	S501	-2634	285
1692	S680	-486	375	1752	S620	-1206	375	1812	S560	-1926	375	1872	S500	-2646	375
1693	S679	-498	465	1753	S619	-1218	465	1813	S559	-1938	465	1873	S499	-2658	465
1694	S678	-510	285	1754	S618	-1230	285	1814	S558	-1950	285	1874	S498	-2670	285
1695	S677	-522	375	1755	S617	-1242	375	1815	S557	-1962	375	1875	S497	-2682	375
1696	S676	-534	465	1756	S616	-1254	465	1816	S556	-1974	465	1876	S496	-2694	465
1697	S675	-546	285	1757	S615	-1266	285	1817	S555	-1986	285	1877	S495	-2706	285
1698	S674	-558	375	1758	S614	-1278	375	1818	S554	-1998	375	1878	S494	-2718	375
1699	S673	-570	465	1759	S613	-1290	465	1819	S553	-2010	465	1879	S493	-2730	465
1700	S672	-582	285	1760	S612	-1302	285	1820	S552	-2022	285	1880	S492	-2742	285
1701	S671	-594	375	1761	S611	-1314	375	1821	S551	-2034	375	1881	S491	-2754	375
1702	S670	-606	465	1762	S610	-1326	465	1822	S550	-2046	465	1882	S490	-2766	465
1703	S669	-618	285	1763	S609	-1338	285	1823	S549	-2058	285	1883	S489	-2778	285
1704	S668	-630	375	1764	S608	-1350	375	1824	S548	-2070	375	1884	S488	-2790	375
1705	S667	-642	465	1765	S607	-1362	465	1825	S547	-2082	465	1885	S487	-2802	465
1706	S666	-654	285	1766	S606	-1374	285	1826	S546	-2094	285	1886	S486	-2814	285
1707	S665	-666	375	1767	S605	-1386	375	1827	S545	-2106	375	1887	S485	-2826	375
1708	S664	-678	465	1768	S604	-1398	465	1828	S544	-2118	465	1888	S484	-2838	465
1709	S663	-690	285	1769	S603	-1410	285	1829	S543	-2130	285	1889	S483	-2850	285
1710	S662	-702	375	1770	S602	-1422	375	1830	S542	-2142	375	1890	S482	-2862	375
1711	S661	-714	465	1771	S601	-1434	465	1831	S541	-2154	465	1891	S481	-2874	465
1712	S660	-726	285	1772	S600	-1446	285	1832	S540	-2166	285	1892	S480	-2886	285
1713	S659	-738	375	1773	S599	-1458	375	1833	S539	-2178	375	1893	S479	-2898	375
1714	S658	-750	465	1774	S598	-1470	465	1834	S538	-2190	465	1894	S478	-2910	465
1715	S657	-762	285	1775	S597	-1482	285	1835	S537	-2202	285	1895	S477	-2922	285
1716	S656	-774	375	1776	S596	-1494	375	1836	S536	-2214	375	1896	S476	-2934	375
1717	S655	-786	465	1777	S595	-1506	465	1837	S535	-2226	465	1897	S475	-2946	465
1718	S654	-798	285	1778	S594	-1518	285	1838	S534	-2238	285	1898	S474	-2958	285
1719	S653	-810	375	1779	S593	-1530	375	1839	S533	-2250	375	1899	S473	-2970	375
1720	S652	-822	465	1780	S592	-1542	465	1840	S532	-2262	465	1900	S472	-2982	465
1721	S651	-834	285	1781	S591	-1554	285	1841	S531	-2274	285	1901	S471	-2994	285
1722	S650	-846	375	1782	S590	-1566	375	1842	S530	-2286	375	1902	S470	-3006	375
1723	S649	-858	465	1783	S589	-1578	465	1843	S529	-2298	465	1903	S469	-3018	465
1724	S648	-870	285	1784	S588	-1590	285	1844	S528	-2310	285	1904	S468	-3030	285
1725	S647	-882	375	1785	S587	-1602	375	1845	S527	-2322	375	1905	S467	-3042	375
1726	S646	-894	465	1786	S586	-1614	465	1846	S526	-2334	465	1906	S466	-3054	465
1727	S645	-906	285	1787	S585	-1626	285	1847	S525	-2346	285	1907	S465	-3066	285
1728	S644	-918	375	1788	S584	-1638	375	1848	S524	-2358	375	1908	S464	-3078	375
1729	S643	-930	465	1789	S583	-1650	465	1849	S523	-2370	465	1909	S463	-3090	465
1730	S642	-942	285	1790	S582	-1662	285	1850	S522	-2382	285	1910	S462	-3102	285
1731	S641	-954	375	1791	S581	-1674	375	1851	S521	-2394	375	1911	S461	-3114	375
1732	S640	-966	465	1792	S580	-1686	465	1852	S520	-2406	465	1912	S460	-3126	465
1733	S639	-978	285	1793	S579	-1698	285	1853	S519	-2418	285	1913	S459	-3138	285
1734	S638	-990	375	1794	S578	-1710	375	1854	S518	-2430	375	1914	S458	-3150	375
1735	S637	-1002	465	1795	S577	-1722	465	1855	S517	-2442	465	1915	S457	-3162	465
1736	S636	-1014	285	1796	S576	-1734	285	1856	S516	-2454	285	1916	S456	-3174	285
1737	S635	-1026	375	1797	S575	-1746	375	1857	S515	-2466	375	1917	S455	-3186	375
1738	S634	-1038	465	1798	S574	-1758	465	1858	S514	-2478	465	1918	S454	-3198	465
1739	S633	-1050	285	1799	S573	-1770	285	1859	S513	-2490	285	1919	S453	-3210	285
1740	S632	-1062	375	1800	S572	-1782	375	1860	S512	-2502	375	1920	S452	-3222	375

Himax Confidential
Do Not Copy

No.	Name	X	Y	No.	Name	X	Y	No.	Name	X	Y	No.	Name	X	Y
1921	S451	-3234	465	1981	S391	-3954	465	2041	S342	-4794	285	2101	S282	-5514	285
1922	S450	-3246	285	1982	S390	-3966	285	2042	S341	-4806	375	2102	S281	-5526	375
1923	S449	-3258	375	1983	S389	-3978	375	2043	S340	-4818	465	2103	S280	-5538	465
1924	S448	-3270	465	1984	S388	-3990	465	2044	S339	-4830	285	2104	S279	-5550	285
1925	S447	-3282	285	1985	S387	-4002	285	2045	S338	-4842	375	2105	S278	-5562	375
1926	S446	-3294	375	1986	S386	-4014	375	2046	S337	-4854	465	2106	S277	-5574	465
1927	S445	-3306	465	1987	S385	-4026	465	2047	S336	-4866	285	2107	S276	-5586	285
1928	S444	-3318	285	1988	S384	-4038	285	2048	S335	-4878	375	2108	S275	-5598	375
1929	S443	-3330	375	1989	S383	-4050	375	2049	S334	-4890	465	2109	S274	-5610	465
1930	S442	-3342	465	1990	S382	-4062	465	2050	S333	-4902	285	2110	S273	-5622	285
1931	S441	-3354	285	1991	S381	-4074	285	2051	S332	-4914	375	2111	S272	-5634	375
1932	S440	-3366	375	1992	S380	-4086	375	2052	S331	-4926	465	2112	S271	-5646	465
1933	S439	-3378	465	1993	S379	-4098	465	2053	S330	-4938	285	2113	S270	-5658	285
1934	S438	-3390	285	1994	S378	-4110	285	2054	S329	-4950	375	2114	S269	-5670	375
1935	S437	-3402	375	1995	S377	-4122	375	2055	S328	-4962	465	2115	S268	-5682	465
1936	S436	-3414	465	1996	S376	-4134	465	2056	S327	-4974	285	2116	S267	-5694	285
1937	S435	-3426	285	1997	S375	-4146	285	2057	S326	-4986	375	2117	S266	-5706	375
1938	S434	-3438	375	1998	S374	-4158	375	2058	S325	-4998	465	2118	S265	-5718	465
1939	S433	-3450	465	1999	S373	-4170	465	2059	S324	-5010	285	2119	S264	-5730	285
1940	S432	-3462	285	2000	S372	-4182	285	2060	S323	-5022	375	2120	S263	-5742	375
1941	S431	-3474	375	2001	S371	-4194	375	2061	S322	-5034	465	2121	S262	-5754	465
1942	S430	-3486	465	2002	S370	-4206	465	2062	S321	-5046	285	2122	S261	-5766	285
1943	S429	-3498	285	2003	S369	-4218	285	2063	S320	-5058	375	2123	S260	-5778	375
1944	S428	-3510	375	2004	S368	-4230	375	2064	S319	-5070	465	2124	S259	-5790	465
1945	S427	-3522	465	2005	S367	-4242	465	2065	S318	-5082	285	2125	S258	-5802	285
1946	S426	-3534	285	2006	S366	-4254	285	2066	S317	-5094	375	2126	S257	-5814	375
1947	S425	-3546	375	2007	S365	-4266	375	2067	S316	-5106	465	2127	S256	-5826	465
1948	S424	-3558	465	2008	S364	-4278	465	2068	S315	-5118	285	2128	S255	-5838	285
1949	S423	-3570	285	2009	S363	-4290	285	2069	S314	-5130	375	2129	S254	-5850	375
1950	S422	-3582	375	2010	S362	-4302	375	2070	S313	-5142	465	2130	S253	-5862	465
1951	S421	-3594	465	2011	S361	-4314	465	2071	S312	-5154	285	2131	S252	-5874	285
1952	S420	-3606	285	2012	DUMMY	-4326	285	2072	S311	-5166	375	2132	S251	-5886	375
1953	S419	-3618	375	2013	DUMMY	-4338	375	2073	S310	-5178	465	2133	S250	-5898	465
1954	S418	-3630	465	2014	DUMMY	-4350	465	2074	S309	-5190	285	2134	S249	-5910	285
1955	S417	-3642	285	2015	DUMMY	-4386	465	2075	S308	-5202	375	2135	S248	-5922	375
1956	S416	-3654	375	2016	DUMMY	-4422	465	2076	S307	-5214	465	2136	S247	-5934	465
1957	S415	-3666	465	2017	DUMMY	-4458	465	2077	S306	-5226	285	2137	S246	-5946	285
1958	S414	-3678	285	2018	DUMMY	-4494	465	2078	S305	-5238	375	2138	S245	-5958	375
1959	S413	-3690	375	2019	DUMMY	-4530	465	2079	S304	-5250	465	2139	S244	-5970	465
1960	S412	-3702	465	2020	DUMMY	-4542	285	2080	S303	-5262	285	2140	S243	-5982	285
1961	S411	-3714	285	2021	DUMMY	-4554	375	2081	S302	-5274	375	2141	S242	-5994	375
1962	S410	-3726	375	2022	DUMMY	-4566	465	2082	S301	-5286	465	2142	S241	-6006	465
1963	S409	-3738	465	2023	S360	-4578	285	2083	S300	-5298	285	2143	S240	-6018	285
1964	S408	-3750	285	2024	S359	-4590	375	2084	S299	-5310	375	2144	S239	-6030	375
1965	S407	-3762	375	2025	S358	-4602	465	2085	S298	-5322	465	2145	S238	-6042	465
1966	S406	-3774	465	2026	S357	-4614	285	2086	S297	-5334	285	2146	S237	-6054	285
1967	S405	-3786	285	2027	S356	-4626	375	2087	S296	-5346	375	2147	S236	-6066	375
1968	S404	-3798	375	2028	S355	-4638	465	2088	S295	-5358	465	2148	S235	-6078	465
1969	S403	-3810	465	2029	S354	-4650	285	2089	S294	-5370	285	2149	S234	-6090	285
1970	S402	-3822	285	2030	S353	-4662	375	2090	S293	-5382	375	2150	S233	-6102	375
1971	S401	-3834	375	2031	S352	-4674	465	2091	S292	-5394	465	2151	S232	-6114	465
1972	S400	-3846	465	2032	S351	-4686	285	2092	S291	-5406	285	2152	S231	-6126	285
1973	S399	-3858	285	2033	S350	-4698	375	2093	S290	-5418	375	2153	S230	-6138	375
1974	S398	-3870	375	2034	S349	-4710	465	2094	S289	-5430	465	2154	S229	-6150	465
1975	S397	-3882	465	2035	S348	-4722	285	2095	S288	-5442	285	2155	S228	-6162	285
1976	S396	-3894	285	2036	S347	-4734	375	2096	S287	-5454	375	2156	S227	-6174	375
1977	S395	-3906	375	2037	S346	-4746	465	2097	S286	-5466	465	2157	S226	-6186	465
1978	S394	-3918	465	2038	S345	-4758	285	2098	S285	-5478	285	2158	S225	-6198	285
1979	S393	-3930	285	2039	S344	-4770	375	2099	S284	-5490	375	2159	S224	-6210	375
1980	S392	-3942	375	2040	S343	-4782	465	2100	S283	-5502	465	2160	S223	-6222	465

Himax Confidential
Do Not Copy

No.	Name	X	Y	No.	Name	X	Y	No.	Name	X	Y	No.	Name	X	Y
2161	S222	-6234	285	2221	S162	-6954	285	2281	S102	-7674	285	2341	S42	-8394	285
2162	S221	-6246	375	2222	S161	-6966	375	2282	S101	-7686	375	2342	S41	-8406	375
2163	S220	-6258	465	2223	S160	-6978	465	2283	S100	-7698	465	2343	S40	-8418	465
2164	S219	-6270	285	2224	S159	-6990	285	2284	S99	-7710	285	2344	S39	-8430	285
2165	S218	-6282	375	2225	S158	-7002	375	2285	S98	-7722	375	2345	S38	-8442	375
2166	S217	-6294	465	2226	S157	-7014	465	2286	S97	-7734	465	2346	S37	-8454	465
2167	S216	-6306	285	2227	S156	-7026	285	2287	S96	-7746	285	2347	S36	-8466	285
2168	S215	-6318	375	2228	S155	-7038	375	2288	S95	-7758	375	2348	S35	-8478	375
2169	S214	-6330	465	2229	S154	-7050	465	2289	S94	-7770	465	2349	S34	-8490	465
2170	S213	-6342	285	2230	S153	-7062	285	2290	S93	-7782	285	2350	S33	-8502	285
2171	S212	-6354	375	2231	S152	-7074	375	2291	S92	-7794	375	2351	S32	-8514	375
2172	S211	-6366	465	2232	S151	-7086	465	2292	S91	-7806	465	2352	S31	-8526	465
2173	S210	-6378	285	2233	S150	-7098	285	2293	S90	-7818	285	2353	S30	-8538	285
2174	S209	-6390	375	2234	S149	-7110	375	2294	S89	-7830	375	2354	S29	-8550	375
2175	S208	-6402	465	2235	S148	-7122	465	2295	S88	-7842	465	2355	S28	-8562	465
2176	S207	-6414	285	2236	S147	-7134	285	2296	S87	-7854	285	2356	S27	-8574	285
2177	S206	-6426	375	2237	S146	-7146	375	2297	S86	-7866	375	2357	S26	-8586	375
2178	S205	-6438	465	2238	S145	-7158	465	2298	S85	-7878	465	2358	S25	-8598	465
2179	S204	-6450	285	2239	S144	-7170	285	2299	S84	-7890	285	2359	S24	-8610	285
2180	S203	-6462	375	2240	S143	-7182	375	2300	S83	-7902	375	2360	S23	-8622	375
2181	S202	-6474	465	2241	S142	-7194	465	2301	S82	-7914	465	2361	S22	-8634	465
2182	S201	-6486	285	2242	S141	-7206	285	2302	S81	-7926	285	2362	S21	-8646	285
2183	S200	-6498	375	2243	S140	-7218	375	2303	S80	-7938	375	2363	S20	-8658	375
2184	S199	-6510	465	2244	S139	-7230	465	2304	S79	-7950	465	2364	S19	-8670	465
2185	S198	-6522	285	2245	S138	-7242	285	2305	S78	-7962	285	2365	S18	-8682	285
2186	S197	-6534	375	2246	S137	-7254	375	2306	S77	-7974	375	2366	S17	-8694	375
2187	S196	-6546	465	2247	S136	-7266	465	2307	S76	-7986	465	2367	S16	-8706	465
2188	S195	-6558	285	2248	S135	-7278	285	2308	S75	-7998	285	2368	S15	-8718	285
2189	S194	-6570	375	2249	S134	-7290	375	2309	S74	-8010	375	2369	S14	-8730	375
2190	S193	-6582	465	2250	S133	-7302	465	2310	S73	-8022	465	2370	S13	-8742	465
2191	S192	-6594	285	2251	S132	-7314	285	2311	S72	-8034	285	2371	S12	-8754	285
2192	S191	-6606	375	2252	S131	-7326	375	2312	S71	-8046	375	2372	S11	-8766	375
2193	S190	-6618	465	2253	S130	-7338	465	2313	S70	-8058	465	2373	S10	-8778	465
2194	S189	-6630	285	2254	S129	-7350	285	2314	S69	-8070	285	2374	S9	-8790	285
2195	S188	-6642	375	2255	S128	-7362	375	2315	S68	-8082	375	2375	S8	-8802	375
2196	S187	-6654	465	2256	S127	-7374	465	2316	S67	-8094	465	2376	S7	-8814	465
2197	S186	-6666	285	2257	S126	-7386	285	2317	S66	-8106	285	2377	S6	-8826	285
2198	S185	-6678	375	2258	S125	-7398	375	2318	S65	-8118	375	2378	S5	-8838	375
2199	S184	-6690	465	2259	S124	-7410	465	2319	S64	-8130	465	2379	S4	-8850	465
2200	S183	-6702	285	2260	S123	-7422	285	2320	S63	-8142	285	2380	S3	-8862	285
2201	S182	-6714	375	2261	S122	-7434	375	2321	S62	-8154	375	2381	S2	-8874	375
2202	S181	-6726	465	2262	S121	-7446	465	2322	S61	-8166	465	2382	S1	-8886	465
2203	S180	-6738	285	2263	S120	-7458	285	2323	S60	-8178	285	2383	DUMMY	-8898	285
2204	S179	-6750	375	2264	S119	-7470	375	2324	S59	-8190	375	2384	DUMMY	-8910	375
2205	S178	-6762	465	2265	S118	-7482	465	2325	S58	-8202	465	2385	DUMMY	-8922	465
2206	S177	-6774	285	2266	S117	-7494	285	2326	S57	-8214	285	2386	VCOM	-9090	285
2207	S176	-6786	375	2267	S116	-7506	375	2327	S56	-8226	375	2387	VCOM	-9102	375
2208	S175	-6798	465	2268	S115	-7518	465	2328	S55	-8238	465	2388	VCOM	-9114	465
2209	S174	-6810	285	2269	S114	-7530	285	2329	S54	-8250	285	2389	VCOM	-9126	285
2210	S173	-6822	375	2270	S113	-7542	375	2330	S53	-8262	375	2390	VCOM	-9138	375
2211	S172	-6834	465	2271	S112	-7554	465	2331	S52	-8274	465	2391	VCOM	-9150	465
2212	S171	-6846	285	2272	S111	-7566	285	2332	S51	-8286	285	2392	VGL	-9198	285
2213	S170	-6858	375	2273	S110	-7578	375	2333	S50	-8298	375	2393	VGL	-9210	375
2214	S169	-6870	465	2274	S109	-7590	465	2334	S49	-8310	465	2394	VGL	-9222	465
2215	S168	-6882	285	2275	S108	-7602	285	2335	S48	-8322	285	2395	G863	-9270	285
2216	S167	-6894	375	2276	S107	-7614	375	2336	S47	-8334	375	2396	G861	-9282	375
2217	S166	-6906	465	2277	S106	-7626	465	2337	S46	-8346	465	2397	G859	-9294	465
2218	S165	-6918	285	2278	S105	-7638	285	2338	S45	-8358	285	2398	G857	-9306	285
2219	S164	-6930	375	2279	S104	-7650	375	2339	S44	-8370	375	2399	G855	-9318	375
2220	S163	-6942	465	2280	S103	-7662	465	2340	S43	-8382	465	2400	G853	-9330	465

Himax Confidential
Do Not Copy

No.	Name	X	Y
2401	G851	-9342	285
2402	G849	-9354	375
2403	G847	-9366	465
2404	G845	-9378	285
2405	G843	-9390	375
2406	G841	-9402	465
2407	G839	-9414	285
2408	G837	-9426	375
2409	G835	-9438	465
2410	G833	-9450	285
2411	G831	-9462	375
2412	G829	-9474	465
2413	G827	-9486	285
2414	G825	-9498	375
2415	G823	-9510	465
2416	G821	-9522	285
2417	G819	-9534	375
2418	G817	-9546	465
2419	G815	-9558	285
2420	G813	-9570	375
2421	G811	-9582	465
2422	G809	-9594	285
2423	G807	-9606	375
2424	G805	-9618	465
2425	G803	-9630	285
2426	G801	-9642	375
2427	G799	-9654	465
2428	G797	-9666	285
2429	G795	-9678	375
2430	G793	-9690	465
2431	G791	-9702	285
2432	G789	-9714	375
2433	G787	-9726	465
2434	G785	-9738	285
2435	G783	-9750	375
2436	G781	-9762	465
2437	G779	-9774	285
2438	G777	-9786	375
2439	G775	-9798	465
2440	G773	-9810	285
2441	G771	-9822	375
2442	G769	-9834	465
2443	G767	-9846	285
2444	G765	-9858	375
2445	G763	-9870	465
2446	G761	-9882	285
2447	G759	-9894	375
2448	G757	-9906	465
2449	G755	-9918	285
2450	G753	-9930	375
2451	G751	-9942	465
2452	G749	-9954	285
2453	G747	-9966	375
2454	G745	-9978	465
2455	G743	-9990	285
2456	G741	-10002	375
2457	G739	-10014	465
2458	G737	-10026	285
2459	G735	-10038	375
2460	G733	-10050	465

No.	Name	X	Y
2461	G731	-10062	285
2462	G729	-10074	375
2463	G727	-10086	465
2464	G725	-10098	285
2465	G723	-10110	375
2466	G721	-10122	465
2467	G719	-10134	285
2468	G717	-10146	375
2469	G715	-10158	465
2470	G713	-10170	285
2471	G711	-10182	375
2472	G709	-10194	465
2473	G707	-10206	285
2474	G705	-10218	375
2475	G703	-10230	465
2476	G701	-10242	285
2477	G699	-10254	375
2478	G697	-10266	465
2479	G695	-10278	285
2480	G693	-10290	375
2481	G691	-10302	465
2482	G689	-10314	285
2483	G687	-10326	375
2484	G685	-10338	465
2485	G683	-10350	285
2486	G681	-10362	375
2487	G679	-10374	465
2488	G677	-10386	285
2489	G675	-10398	375
2490	G673	-10410	465
2491	G671	-10422	285
2492	G669	-10434	375
2493	G667	-10446	465
2494	G665	-10458	285
2495	G663	-10470	375
2496	G661	-10482	465
2497	G659	-10494	285
2498	G657	-10506	375
2499	G655	-10518	465
2500	G653	-10530	285
2501	G651	-10542	375
2502	G649	-10554	465
2503	G647	-10566	285
2504	G645	-10578	375
2505	G643	-10590	465
2506	G641	-10602	285
2507	G639	-10614	375
2508	G637	-10626	465
2509	G635	-10638	285
2510	G633	-10650	375
2511	G631	-10662	465
2512	G629	-10674	285
2513	G627	-10686	375
2514	G625	-10698	465
2515	G623	-10710	285
2516	G621	-10722	375
2517	G619	-10734	465
2518	G617	-10746	285
2519	G615	-10758	375
2520	G613	-10770	465

No.	Name	X	Y
2521	G611	-10782	285
2522	G609	-10794	375
2523	G607	-10806	465
2524	G605	-10818	285
2525	G603	-10830	375
2526	G601	-10842	465
2527	G599	-10854	285
2528	G597	-10866	375
2529	G595	-10878	465
2530	G593	-10890	285
2531	G591	-10902	375
2532	G589	-10914	465
2533	G587	-10926	285
2534	G585	-10938	375
2535	G583	-10950	465
2536	G581	-10962	285
2537	G579	-10974	375
2538	G577	-10986	465
2539	G575	-10998	285
2540	G573	-11010	375
2541	G571	-11022	465
2542	G569	-11034	285
2543	G567	-11046	375
2544	G565	-11058	465
2545	G563	-11070	285
2546	G561	-11082	375
2547	G559	-11094	465
2548	G557	-11106	285
2549	G555	-11118	375
2550	G553	-11130	465
2551	G551	-11142	285
2552	G549	-11154	375
2553	G547	-11166	465
2554	G545	-11178	285
2555	G543	-11190	375
2556	G541	-11202	465
2557	G539	-11214	285
2558	G537	-11226	375
2559	G535	-11238	465
2560	G533	-11250	285
2561	G531	-11262	375
2562	G529	-11274	465
2563	G527	-11286	285
2564	G525	-11298	375
2565	G523	-11310	465
2566	G521	-11322	285
2567	G519	-11334	375
2568	G517	-11346	465
2569	G515	-11358	285
2570	G513	-11370	375
2571	G511	-11382	465
2572	G509	-11394	285
2573	G507	-11406	375
2574	G505	-11418	465
2575	G503	-11430	285
2576	G501	-11442	375
2577	G499	-11454	465
2578	G497	-11466	285
2579	G495	-11478	375
2580	G493	-11490	465

No.	Name	X	Y
2581	G491	-11502	285
2582	G489	-11514	375
2583	G487	-11526	465
2584	G485	-11538	285
2585	G483	-11550	375
2586	G481	-11562	465
2587	G479	-11574	285
2588	G477	-11586	375
2589	G475	-11598	465
2590	G473	-11610	285
2591	G471	-11622	375
2592	G469	-11634	465
2593	G467	-11646	285
2594	G465	-11658	375
2595	G463	-11670	465
2596	G461	-11682	285
2597	G459	-11694	375
2598	G457	-11706	465
2599	G455	-11718	285
2600	G453	-11730	375
2601	G451	-11742	465
2602	G449	-11754	285
2603	G447	-11766	375
2604	G445	-11778	465
2605	G443	-11790	285
2606	G441	-11802	375
2607	G439	-11814	465
2608	G437	-11826	285
2609	G435	-11838	375
2610	G433	-11850	465
2611	DUMMY	-11862	285
2612	DUMMY	-11874	375
2613	DUMMY	-11886	465

Alignment mark	X	Y
A+	11890	0
A-	-11890	0

Himax Confidential
Do Not Copy

3.4.1 Bump Arrangement

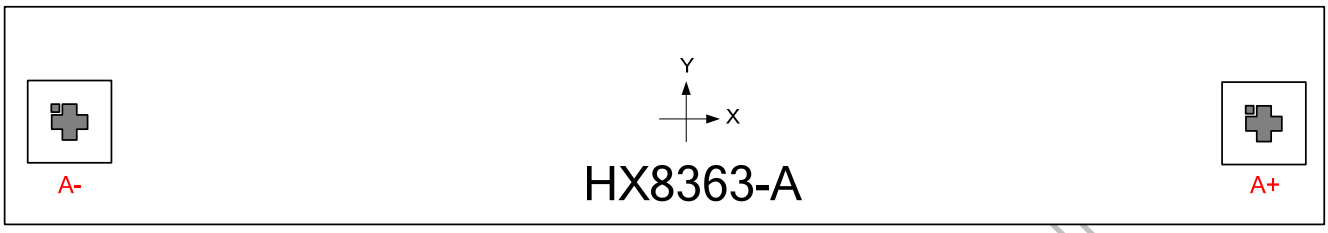

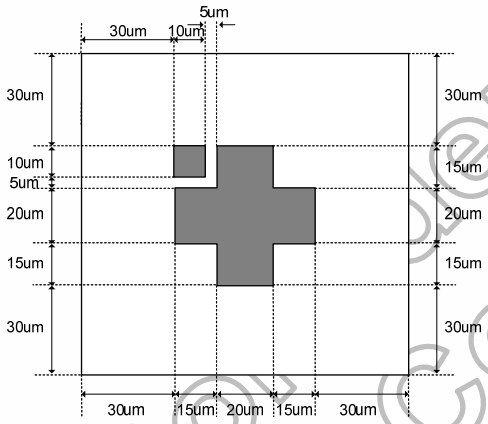

A+ (11890,0), A- (-11890,0)

Himax Confidential
Do Not Copy

Input PAD	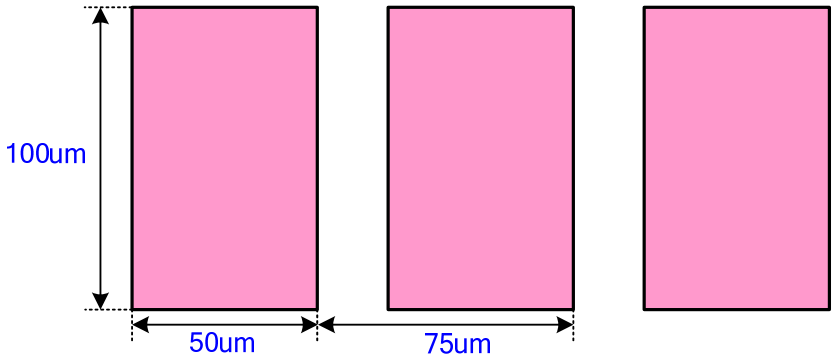
Output PAD	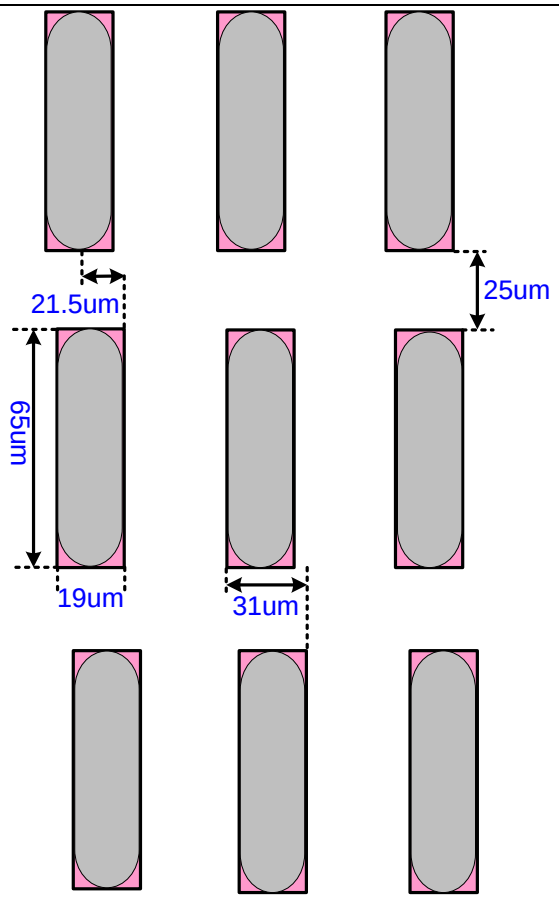

This information contained herein is the exclusive property of Himax and shall not be distributed, reproduced, or disclosed in whole or in part without prior written permission of Himax.

4. Interface

4.1 System Interface

The HX83xx-A supports 3-wire serial peripheral interface and RGB interface, MIPI DSI interface. Serial peripheral interface is always effective and it can be used to access internal command and parameter. The RGB interface is only used to access display data and display directly via source output. MIPI DSI can access both internal command and display data.

BS1	BS0	interface mode	DB pins
0	0	3 wire serial + RGB interface (SCL Risingl edge)	RGB:16/18/24 bit
0	1	DSI command mode	DSI_CP, DSI_CN, DSI_D0P, DSI_D0N, DSI_D1P, DSI_D1N
1	0	Reserve	-
1	1	Reserve	-

Table 4.1 Interface selection

Himax Confidential
Do Not Copy

This information contained herein is the exclusive property of Himax and shall not be distributed, reproduced, or disclosed in whole or in part without prior written permission of Himax.

4.1.1 Serial Data Transfer Interface

The HX83xx-A supports 3 wire serial data transfer interface. The 3 wire serial bus uses chip select line (NCS), serial input/output data SDI/SDO and the serial transfer clock line SCL).

Serial data write mode

The 3-Pin serial data packet contains a control bit DNC and a transmission byte. If DNC is low, the transmission byte is command byte. If DNC is high, the transmission byte is stored to command register. The MSB is transmitted first. The serial interface is initialized when NCS is high. In this state, SCL clock pulse or SDI/SDO data have no effect. A falling edge on NCS enables the serial interface and indicates the start of data transmission.

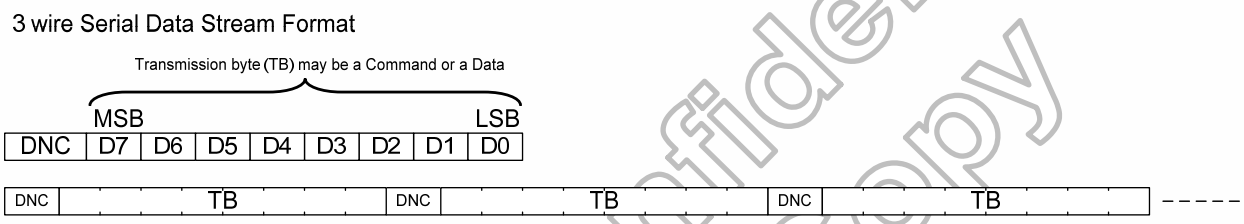

Figure 4.1 Serial Data stream, write mode

Himax Confidential
Do Not Copy

This information contained herein is the exclusive property of Himax and shall not be distributed, reproduced, or disclosed in whole or in part without prior written permission of Himax.

3 wire Serial Interface Protocol

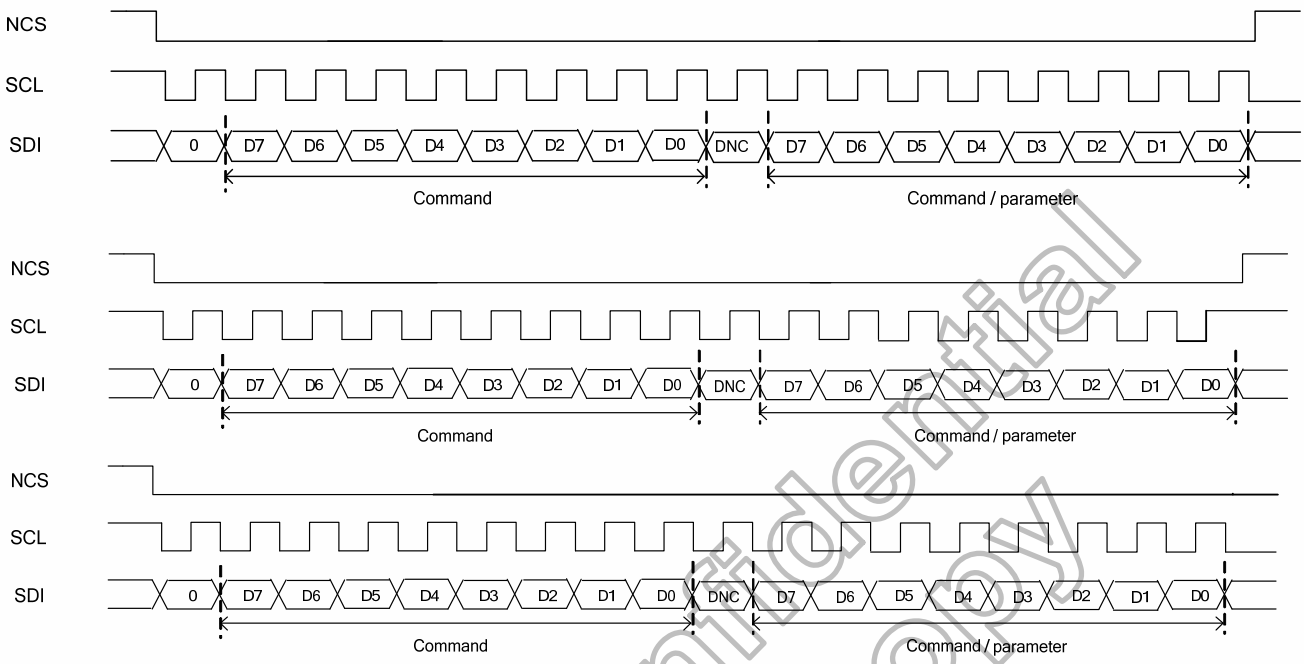

Figure 4.2 Serial Interface protocol 3 wire serial interface (write mode)

Himax Confidential
Do Not Copy

Serial Data Read Mode

The micro controller firstly has to send a command and then the following byte is transmitted in the opposite direction. The read mode has three types of command data transmitted (8- /24- /32-bit) according command code.

3 wire Serial Interface Protocol

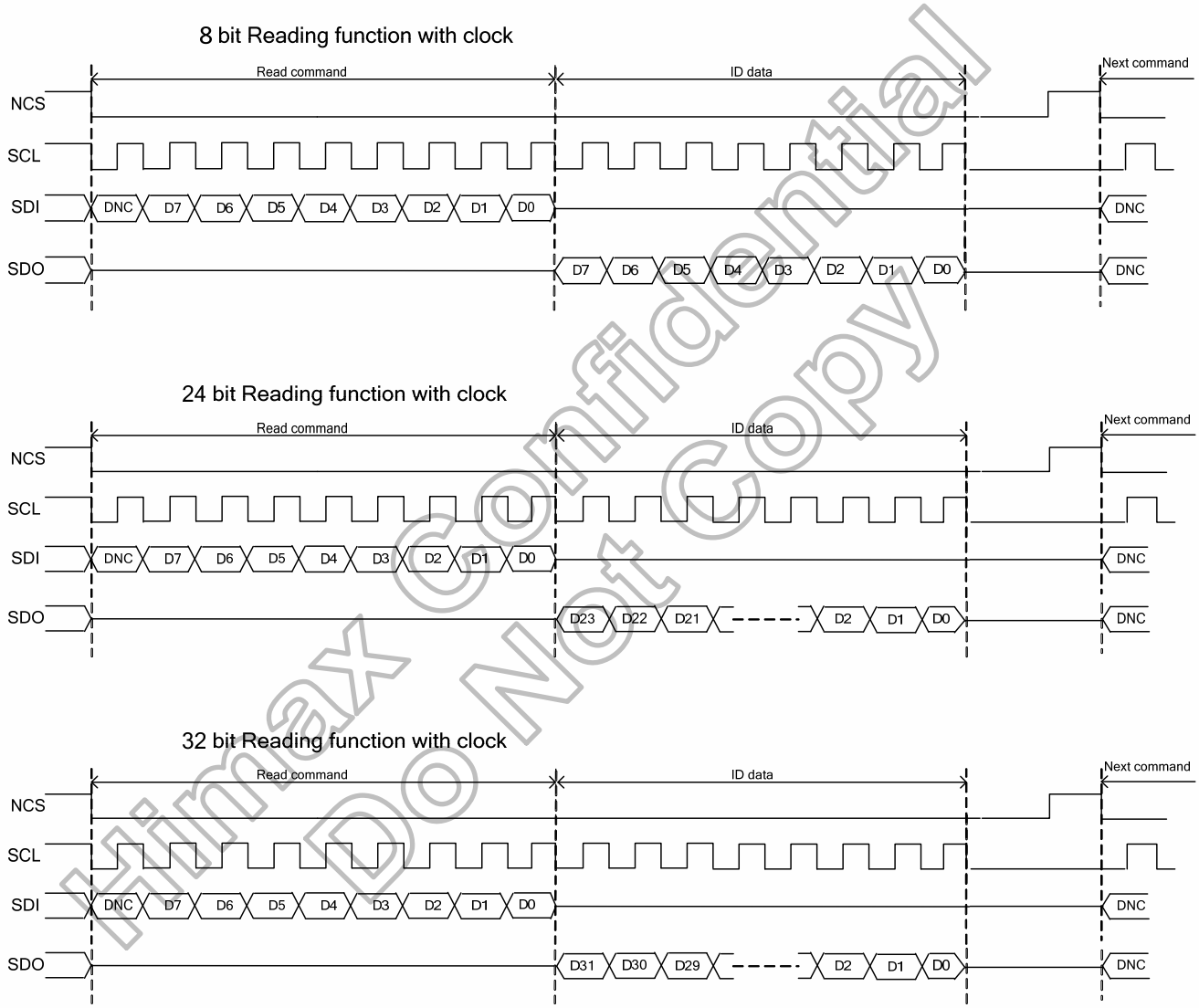

Figure 4.3 3 wire Serial Interface protocol, read mode

Himax Confidential
Do Not Copy

If there is a break on data transmission when transmitting a command before a whole byte has been completed, then the display module will reset the interface so that it will be ready to receive the same byte re-transmitted when the chip select line (NCS) is next activated. See the following figure.

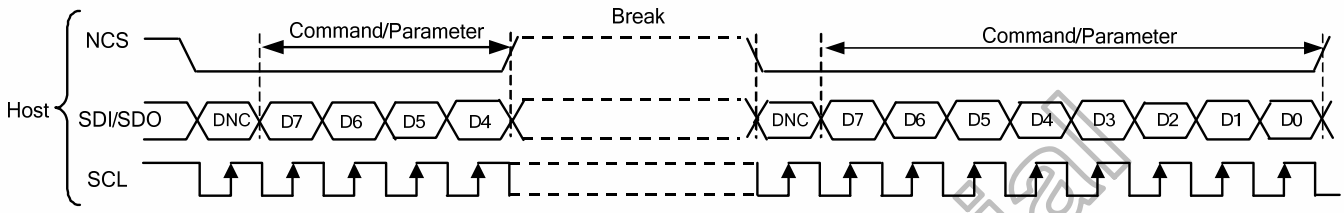

Figure 4.4 Display Module Data Transfer Recovery

Himax Confidential
Do Not Copy

This information contained herein is the exclusive property of Himax and shall not be distributed, reproduced, or disclosed in whole or in part without prior written permission of Himax.

4.2 RGB Interface

The HX83xx-A supports RGB interface that is used 3 wire serial data transfer interface to transmit/receive command.

The HX83xx-A uses 16, 18 or 24-bit parallel RGB interface which includes: HSYNC, VSYNC, ENABLE, DCK, DB[23…0] –lines. The interface is active after Power On sequence. Pixel clock (DCK) runs all the time without stopping and it is used to enter HSYNC, VSYNC, ENABLE and DB[23…0] –lines states when there is a rising edge of the DCK. The DCK cannot be used as continues internal clock for other functions of the display module e.g. Sleep In –mode etc. Vertical synchronization (VSYNC) is used to tell when there is received a new frame of the display. This is negative ('-', '0', low) active and its state is read to the display module by a rising edge of the DCK-line. Horizontal synchronization (HSYNC) is used to tell when a new line of the frame is received. This is negative ('-', '0', low) active and its state is read to the display module by a rising edge of the DCK-line. Data enable (ENABLE) is used to tell when there is received RGB information that should be transferred on the display. This is positive ('+', '1', high) active and its state is read to the display module by a rising edge of the DCK-line. DB[23…0] (24 bit: R7-R0, G7-G0 and B7-B0; 18 bit: R5-R0, G5-G0 and B5-B0; 16 bit: R4- R0, G5-G0 and B4-B0) are used to tell what is the information of the image that is transferred on the display (when ENABLE =1 and there is a rising edge of DCK). DB[23…0] – lines can be set to "0" (low) or "1" (high). These lines are read by a rising edge of the DCK-line.

The pixel clock cycle is described in the following figure.

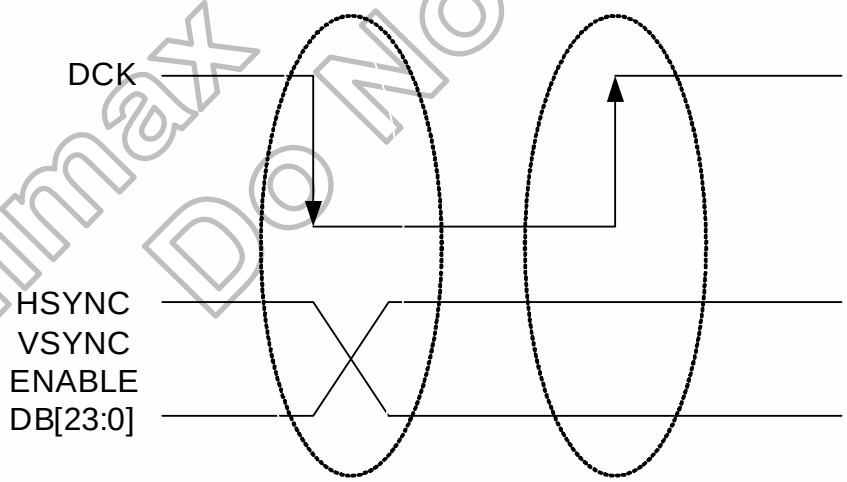

Note: DCK is an unsynchronized signal (It can be stopped).
Figure 4.5 DCK cycle

Himax Confidential
Do Not Copy

This information contained herein is the exclusive property of Himax and shall not be distributed, reproduced, or disclosed in whole or in part without prior written permission of Himax.

16 bit/pixel Color Order on the RGB I/F

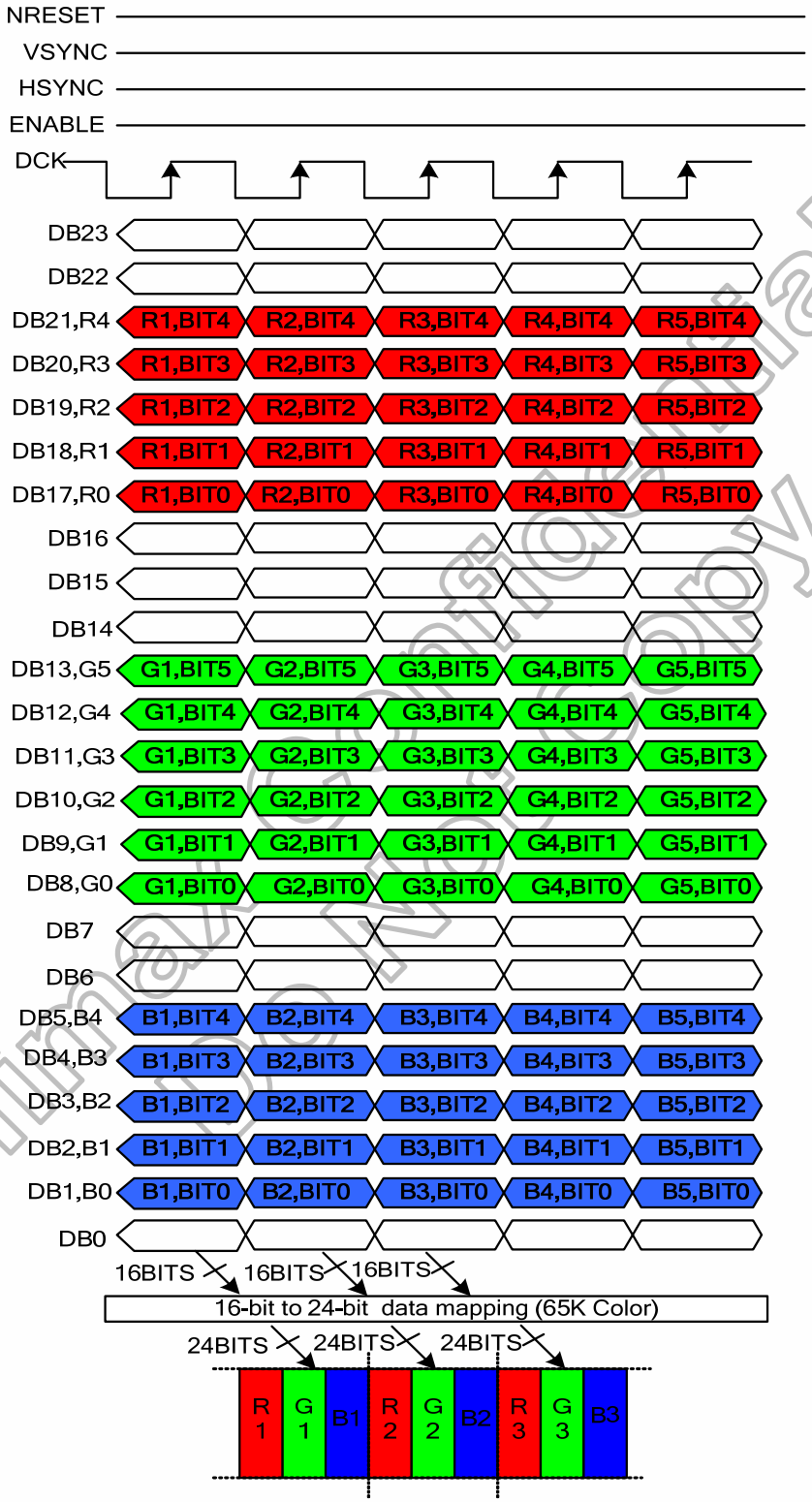

Note: The Data order is shown as follows, MSB = DB23, LSB = DB0 and Picture Data is MSB = Bit5, LSB = Bit0 for Green data and MSB = Bit4, LSB = Bit0 for Red and Blue data. DB23, DB22, DB16, DB15, DB14, DB7, DB6 and DB0 are set to high or low.

Figure 4.6 16 bit/pixel Color Order on the RGB I/F

Himax Confidential
Do Not Copy

This information contained herein is the exclusive property of Himax and shall not be distributed, reproduced, or disclosed in whole or in part without prior written permission of Himax.

18 bit/pixel Color Order on the RGB I/F

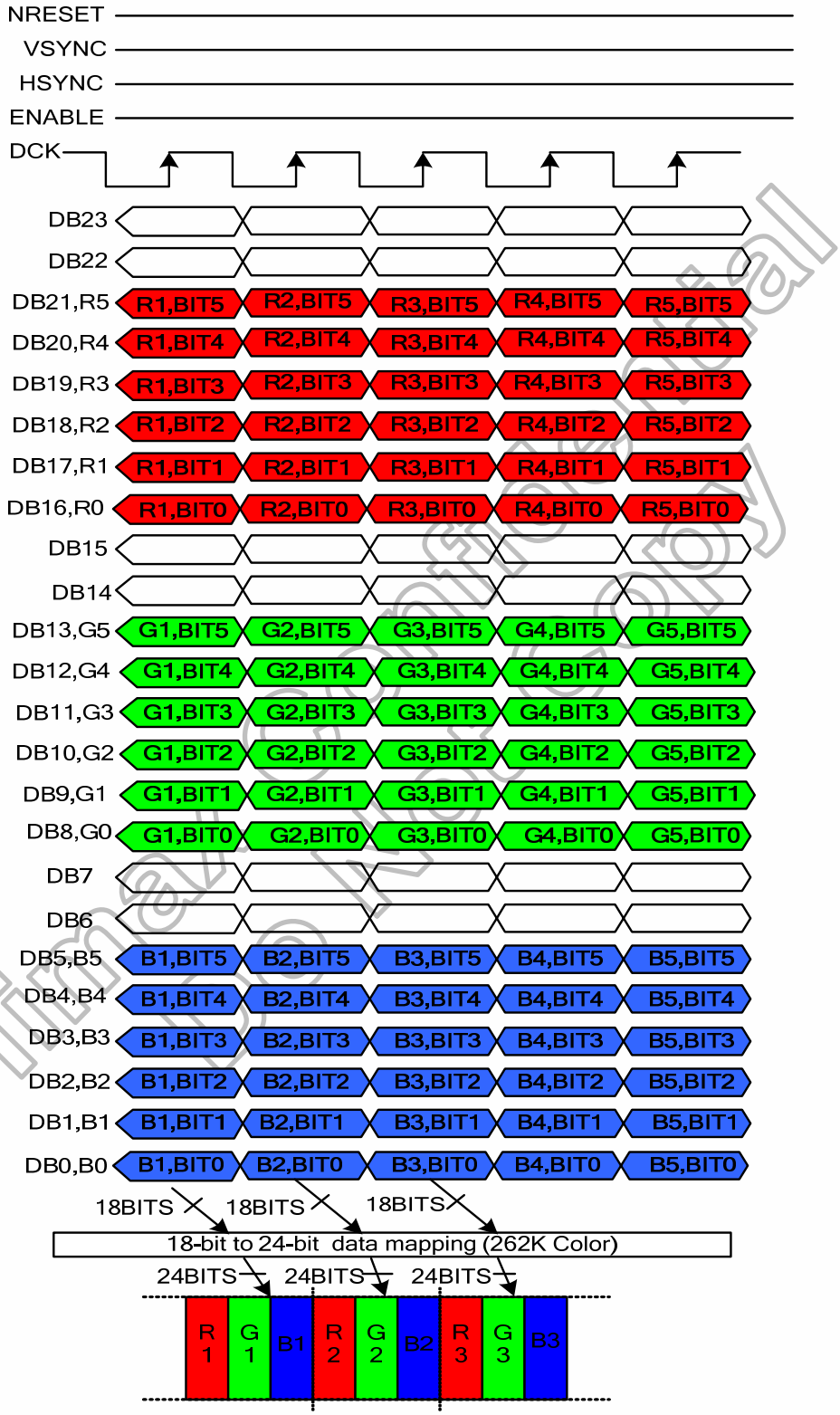

Note: The Data order is shown as follows, MSB = DB23, LSB = DB0 and Picture Data is MSB = Bit5, LSB = Bit0 for Red, Green and Blue data. DB23, DB22, DB15, DB14, DB7 and DB6 are set to high or low.

Figure 4.7 18 bit/pixel Color Order on the RGB I/F

Himax Confidential
Do Not Copy

24 bit/pixel Color Order on the RGB I/F

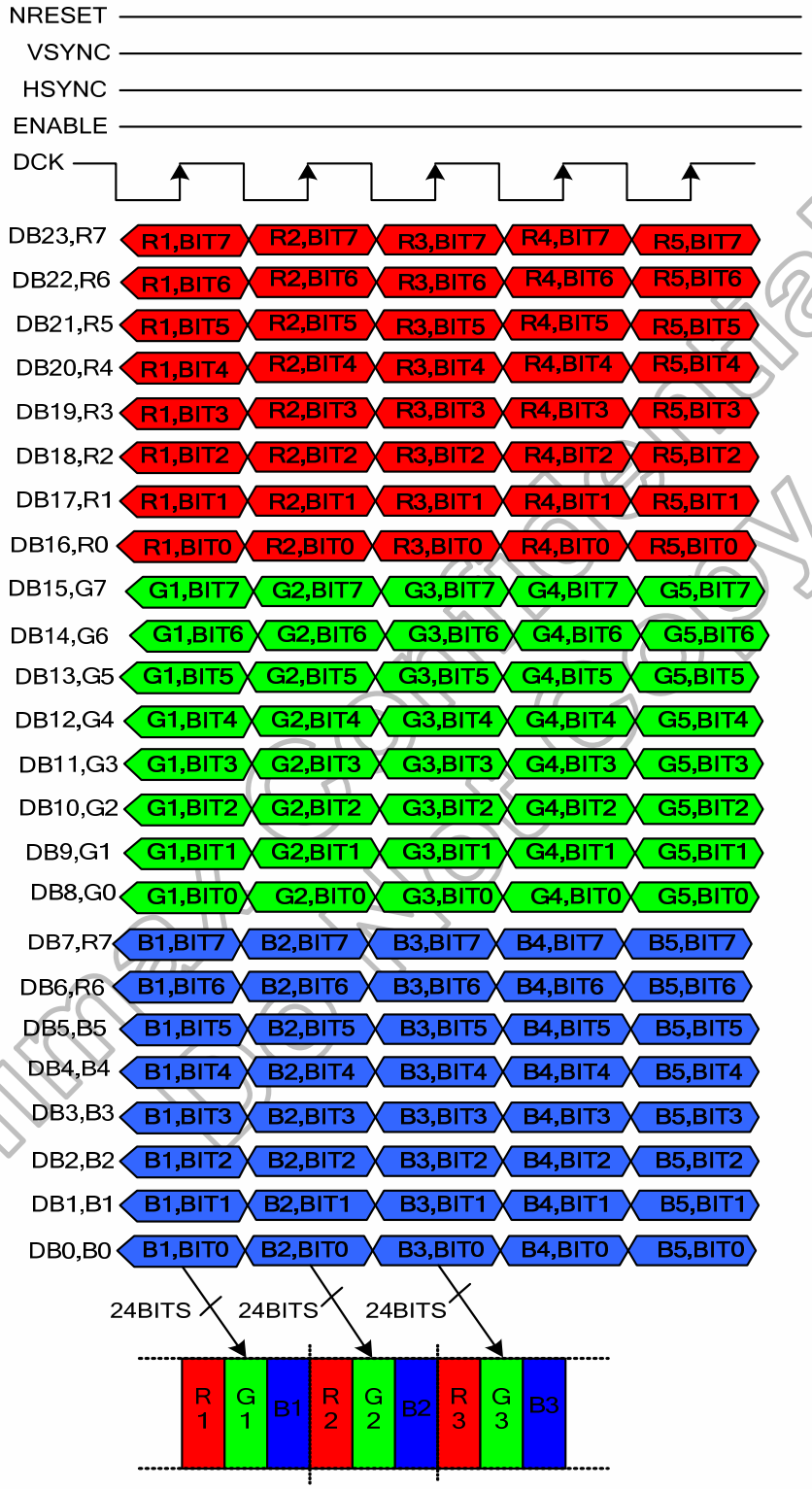

Note: The Data order is shown as follows, MSB = DB23, LSB = DB0 and Picture Data is MSB = Bit7, LSB = Bit0 for Red, Green and Blue data.

Figure 4.8 24bit/pixel Color Order on the RGB I/F

Himax Confidential
This information contained herein is the exclusive property of Himax and shall not be distributed, reproduced, or disclosed in whole or in part without prior written permission of Himax.

General Timing Diagram

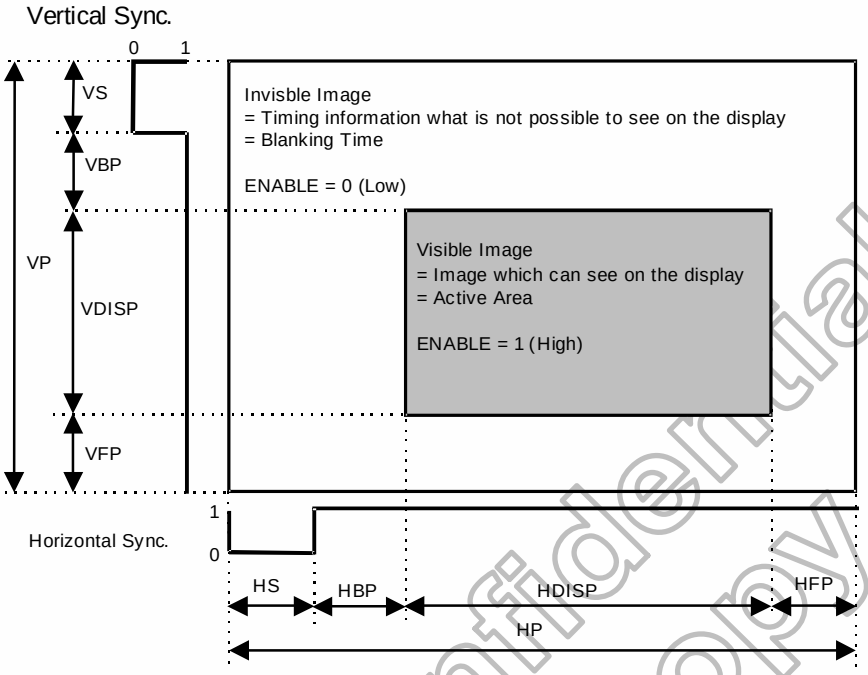

Figure 4.9 General Timing Diagram

The image information must be correct on the display, when the timings are in range on the interface. However, the image information might be incorrect on the display, when timings are out of the range on the interface (Out of the range timings cannot cause any damage on the display module or it cannot cause any damage on the host side). The correct image information must be displayed automatically (by the display module) on the next frame (vertical sync.), when there is returned from out of the range to in range interface timings.

Himax Confidential
Do Not Copy

This information contained herein is the exclusive property of Himax and shall not be distributed, reproduced, or disclosed in whole or in part without prior written permission of Himax.

4.3 DSI Protocol

The Protocol layer appends packet-protocol information and headers. The receiver side of a DSI Link performs the converse of the transmitter side, decomposing the packet into parallel data, signal events and commands. The DSI protocol permits multiple packets which is useful for events such as peripheral initialization, where many registers may be loaded separate write commands at system startup. Figure 5.31 illustrates multiple HS Transmission packets.

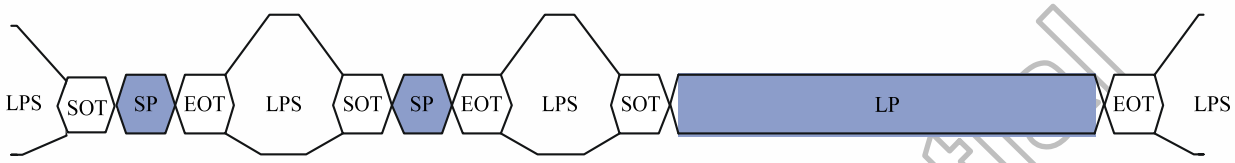

LPS：Low power state
SOT：Start of Transmission
SP：Short Packet
LP：Long Packet
EOT：End of Transmission

Figure 4.10 Multiple HS Transmission packets

The packet includes two types which are Long packet and short packet. The first byte of the packet, the Data Identifier (DI), includes information specifying the length of the packet. Command Mode systems send commands and an associated set of parameters, with the number of parameters depending on the command type.

Short packets specify the payload length using the Data Type field and are from two to nine bytes in length. Short packet is used for most Command Mode commands and associated parameters. Where short packets format include an 8-bit Data ID followed by zero to seven bytes and an 8-bit ECC. Figure 5.32 shows the structure of the Short packet.

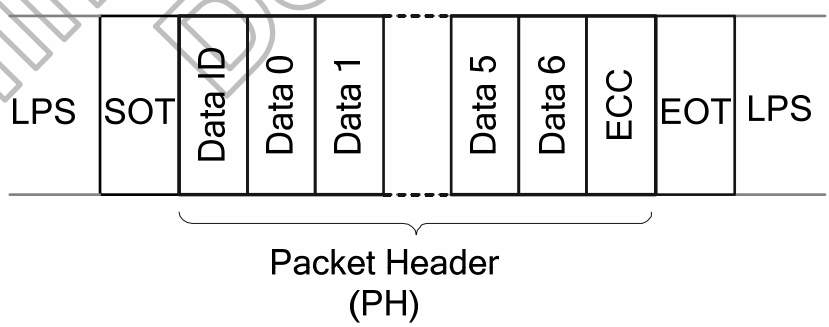

DI(Data ID)：Contain Virtual Channel Identifier and Data Type.
ECC(Error Correction Code)：The Error Correction Code allows single-bit errors to be corrected and 2-bit errors to be detected in the Packet Header.

Figure 4.11 Structure of the Short packet

Himax Confidential
Do Not Copy

Long packets specify the payload length using a two-byte Word Count field and then the payload maybe from 0 to 65,541 bytes in length. Long packets permit transmission of large blocks of pixel or other data.. Figure 5.33 shows the structure of the Long packet. Long Packet Header composed of three elements: an 8-bit Data Identifier, a 16-bit Word Count, and 8-bit ECC. The Packet Footer has one element, a 16-bit checksum. Long packets can be from 6 to 65,541 bytes in length.
Where 65,541 bytes = (2^{16}-1) + 4 bytes PH + 2 bytes PF

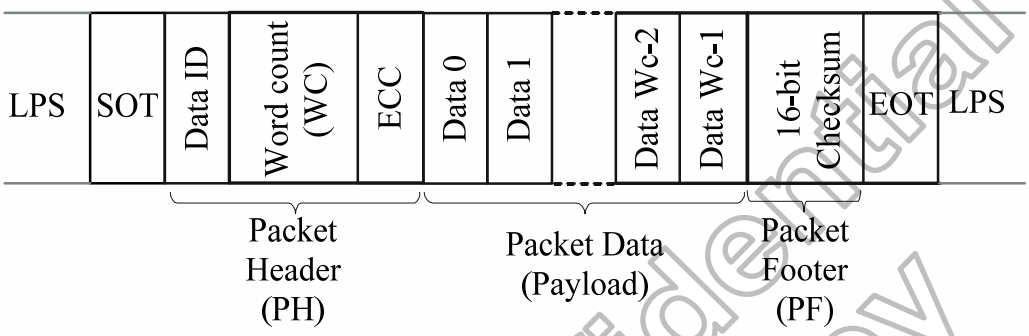

DI (Data ID)：Contain Virtual Channel Identifier and Data Type.
WC (Word Count)：The receiver use WC to define packet end.
ECC (Error Correction Code)：The Error Correction Code allows single-bit errors to be corrected and 2-bit errors to be detected in the Packet Header.
PF(Packet Footer)：Mean 16-bit Checksum.

Figure 4.12 Structure of the Long packet

According to packet form, basic elements include DI and ECC. Figure 5.34 the shows format of Data ID.

DI7	DI6	DI5	DI4	DI3	DI2	DI1	DI0
VC (Virtual Channel)		DT (Data Type)					

DI[7:6] **è** These two bits identify the data as directed to one of four virtual channels.
DI[5:0]: These six bits specify the Data Type, which specifies the size, format and, in some cases, the interpretation of the packet contents.

Figure 4.13 The format of Data ID.

Himax Confidential
Do Not Copy

Due to Data Type (DT) mean format of transmission type, Figure 4.63 show Short- / Long- packet transmission command sequence.

Long packet write Command / Parameters / Pixel Datas

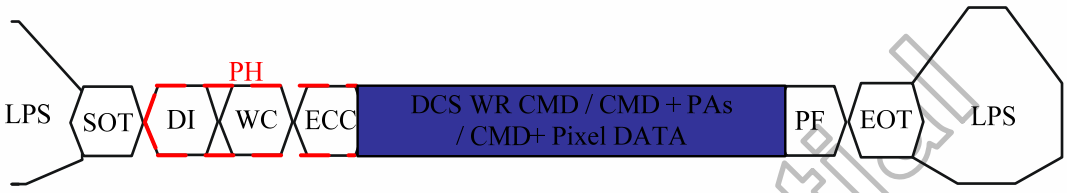

DI ➔ Write suitable Data type.
WC ➔ Write number of Payload Data.
Ex: One CMD write, WC setting as 1.
CMD + PAs write, WC setting as number of (CMD+PAs).
CMD + DATA write, WC setting as number of (CMD + Pixel DATA).

Short packet write Command / Parameters

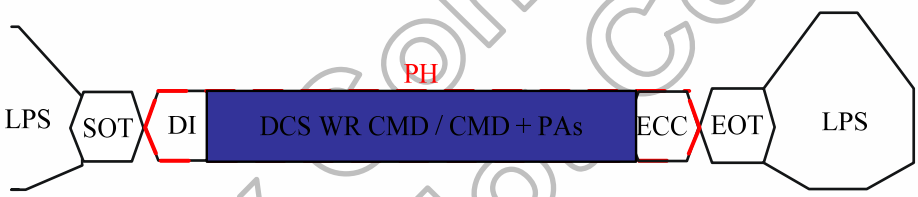

DI ➔ Write suitable Data type.
Ex: One CMD write, DI + DCS WR CMD
CMD + PAs write, DI + DCS WR CMD + PAs

Figure 4.14 show Short- / Long- packet transmission command sequence

Himax Confidential
Do Not Copy

4.3.1 Processor to peripheral Direction packets Data types

The set of transaction types sent from the host processor to a peripheral, such as a display module, are shown in Table 4.8 Data Types for Processor-sourced Packets.

Data Type, Hex	Data Type, Binary	Description Packet	Size
01h	00 0001	Sync Event, V Sync Start	Short
11h	01 0001	Sync Event, V Sync End	Short
21h	10 0001	Sync Event, H Sync Start	Short
31h	11 0001	Sync Event, H Sync End	Short
02h	00 0010	Color Mode (CM) Off Command	Short
12h	01 0010	Color Mode (CM) On Command	Short
22h	10 0010	Shut Down Peripheral Command	Short
32h	11 0010	Turn On Peripheral Command	Short
06h	00 0110	DCS READ, no parameters	Short
37h	11 0111	Set Maximum Return Packet Size	Short
09h	00 1001	Null Packet, no data	Long
19h	01 1001	Blanking Packet, no data	Long
39h	11 1001	DCS Long Write/write_LUT Command Packet	Long
0Eh	00 1110	Packed Pixel Stream, 16-bit RGB, 5-6-5 Format	Long
1Eh	01 1110	Packed Pixel Stream, 18-bit RGB, 6-6-6 Format	Long
2Eh	10 1110	Loosely Packed Pixel Stream, 18-bit RGB, 6-6-6 Format	Long
3Eh	11 1110	Packed Pixel Stream, 24-bit RGB, 8-8-8 Format (This project is not use)	Long
X0h and XFh, unspecified	xx 0000	DO NOT USE	
	xx 1111	All unspecified codes are reserved	

Table 4.2 Data Types for Processor-sourced Packets

Himax Confidential
Do Not Copy

This information contained herein is the exclusive property of Himax and shall not be distributed, reproduced, or disclosed in whole or in part without prior written permission of Himax.

Under tables list all detail function of all data types

Sync Event (H Start, H End, V Start, V End), Data Type = xx 0001 (x1h)

Data Type, Hex	Function Description	Number of bytes
01h	V Sync start, Start of VSA pulse.	2 bytes (DI + ECC)
11h	V Sync End, End of VSA pulse.	
21h	H Sync Start, Start of HSA pulse.	
31h	H Sync End, End of HSA pulse.	

Note:
V Sync Start and V Sync End event represents the start and end of the VSA, respectively. Similarly H Sync Start and H Sync End event represents the start and end of the HSA, respectively.

Color Mode Status (Color Mode On, Color Mode Off)

Data Type, Hex	Function Description	Number of bytes
02h	Color Mode On that switches a Video Mode display module to a low-color mode for power saving.	2 bytes (DI + ECC)
12h	Color Mode Off that switches a Video Mode display module from low-color display to normal display.	

Display Status (Shutdown Command, Turn-On command)

Data Type, Hex	Function Description	Number of bytes
22h	Shutdown Peripheral command that turns off the display in a Video Mode display for power saving.	2 bytes (DI + ECC)
32h	Turn On Peripheral command that turns on the display in Video Mode display for normal display.	

Note:
When use shutdown command, interface shall remain powered in order to receive the turn-on, or wake-up, command.

DCS Command Setting

Data Type, Hex	Function Description	Number of bytes
06h	DCS Read command, the returned data may be of Short or Long packet format.	3 bytes (DI + DCS CMD. + ECC)
39h	DCS Long Write/ Write _ LUT Command is used to send larger blocks of data to a display module that implements the Display Command Set.	Up to 65541 bytes (DI + WC + ECC + DCS CMD. + Payload DATA + PF)

NOTE:
1. For write part, If DCS Short Write command, followed by BTA, the peripheral shall respond with **ACK** when without error was detected in the transmission (Host **à** Slave). Unless an error was detected, the peripheral shall respond with **Acknowledge with Error Report**.

Himax Confidential Do Not Copy

This information contained herein is the exclusive property of Himax and shall not be distributed, reproduced, or disclosed in whole or in part without prior written permission of Himax.

2. When use DCS Read Command, the **Set Max Return Packet Size** command will limit the size of returning packets.
3. The peripheral shall respond to DCS Read Command Request in one of the following ways:

◆ If an error was detected by the peripheral, it shall send *Acknowledge with Error Report*. So the peripheral shall transmit the requested READ data packet with suitable ECC in the same transmission.

◆ If no error was detected by the peripheral, it shall send the requested READ packet (Short or Long) with appropriate ECC and Checksum, if either or both features are enabled.

4. **One byte <= Length of payload DATA <= 2^{WC}-1**

Return Packet Size setting

Data Type, Hex	Function Description	Number of bytes
37h	Set Maximum Return Packet Size that specifies the maximum size of the payload in a Long packet transmitted from peripheral back to the host processor.	4 bytes (DI + WC + ECC)

Note:
The two-byte value is transmitted with LS byte first. And during a power-on or Reset sequence, the Maximum Return Packet Size shall be set by the peripheral to a default value of one.

Variable Data Packet

Data Type, Hex	Function Description	Number of bytes
09h	Null Packet is a mechanism for keeping the serial Data Lane(s) in High-Speed mode while sending dummy data.	Up to 65541 bytes (DI + WC + ECC + DCS CMD. + Payload DATA + PF)
19h	Blanking packet is used to convey blanking timing information in a Long packet.	

Note:
1. When **Null Packet**, the Payload Data belong “null” Data, actual data values sent are irrelevant because the peripheral does not capture or store the data.
2. When **Blanking packet**, the packet represents a period between active scan lines of a Video Mode display,

Himax Confidential
Do Not Copy

This information contained herein is the exclusive property of Himax and shall not be distributed, reproduced, or disclosed in whole or in part without prior written permission of Himax.

Data Stream Format

Data Type, Hex	Function Description	Number of bytes
0Eh	Packed Pixel Stream 16-Bit Format is used to transmit image data formatted as 16-bit pixels to a Video Mode display module. Pixel format is "(5 bits) red, (6 bits) green and (5 bits) blue".	Up to 65541 bytes (DI + WC + ECC + DCS CMD. + Payload DATA + PF)

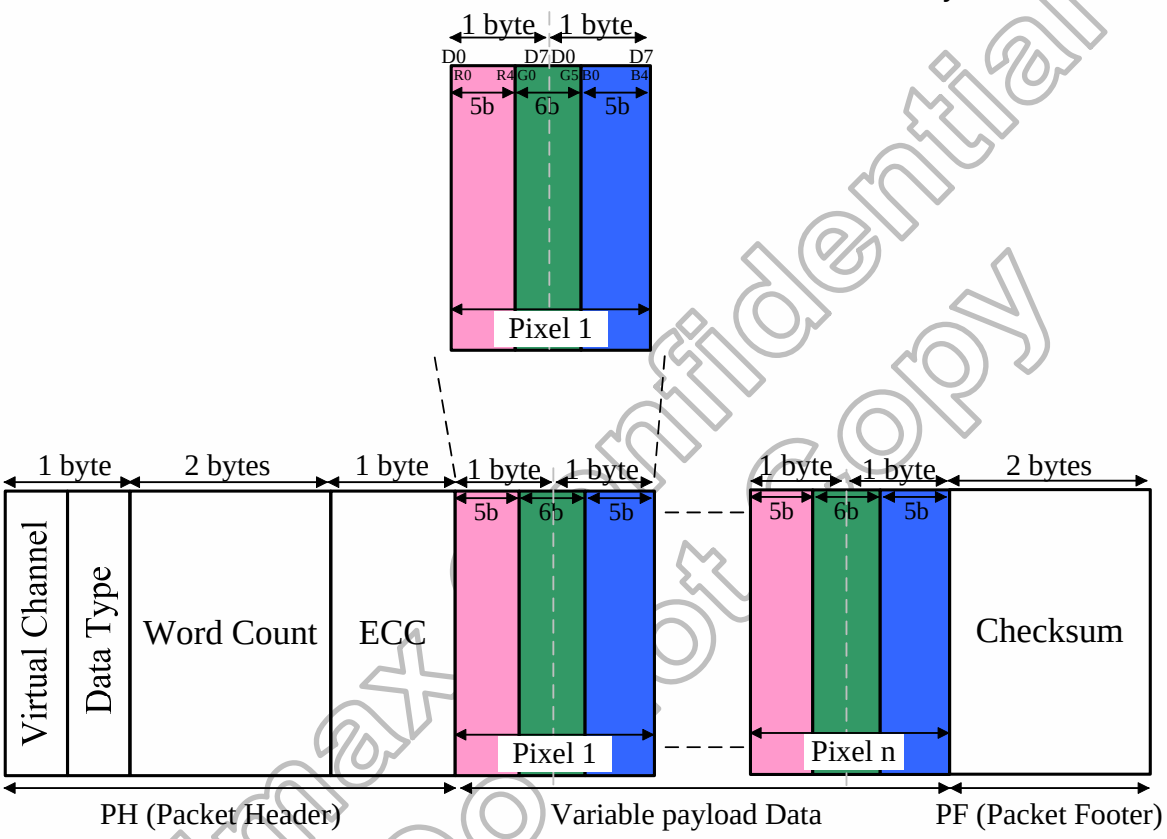

Note:
Within a color component, the "LSB is sent first, the MSB last ".

Himax Confidential
Do not copy

Data Stream Format

Data Type, Hex	Function Description	Number of bytes
1Eh	Packed Pixel Stream 18-Bit Format is used to transmit image data formatted as 18-bit pixels to a Video Mode display module. Pixel format is "(6 bits) red, (6 bits) green and (6 bits) blue".	Up to 65541 bytes (DI + WC + ECC + DCS CMD. + Payload DATA + PF)

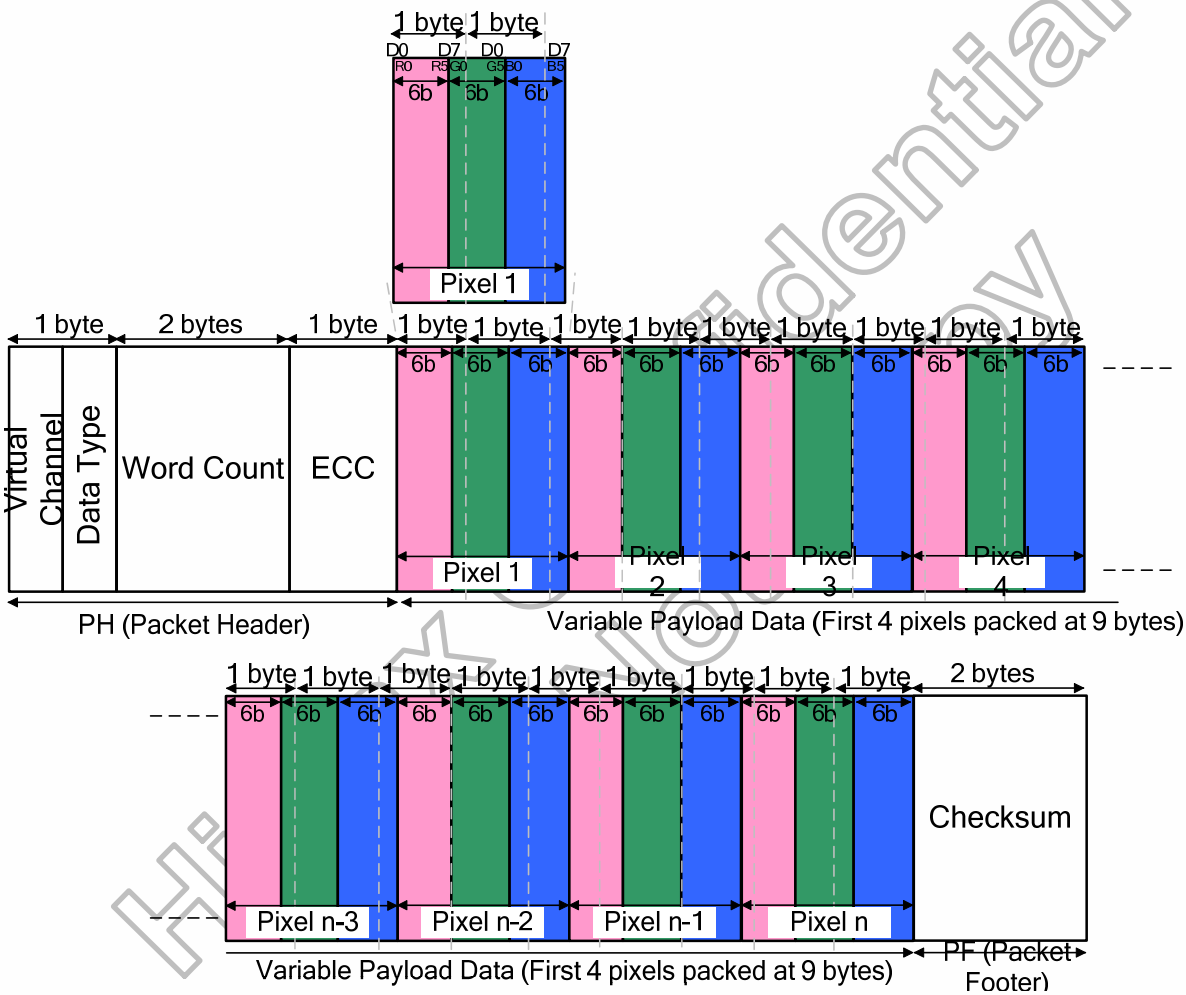

Note:
Within a color component, the LSB is sent first and the MSB last and pixel boundaries only line up with byte boundaries every four pixels (nine bytes). Preferably, display modules employing this format have a horizontal extent (width in pixels) evenly divisible by four, so no partial bytes remain at the end of the display line data. It is possible to send pixel data that represent a line width that is not a multiple of four pixels, but display logic on the receiver end shall dispose of the extra bits of the partial byte at the end of active display and ensure a "clean start" for the next line.

Himax Confidential

Data Stream Format

Data Type, Hex	Function Description	Number of bytes
2Eh	Packed Pixel Stream 18-Bit Format, each R, G, or B color component is one byte form, but the valid pixel bits occupy bits [7:2] and bits [1:0] of are ignored. Pixel format is “(6 bits) red, (6 bits) green and (6 bits) blue”.	Up to 65541 bytes (DI + WC + ECC + DCS CMD. + Payload DATA + PF)

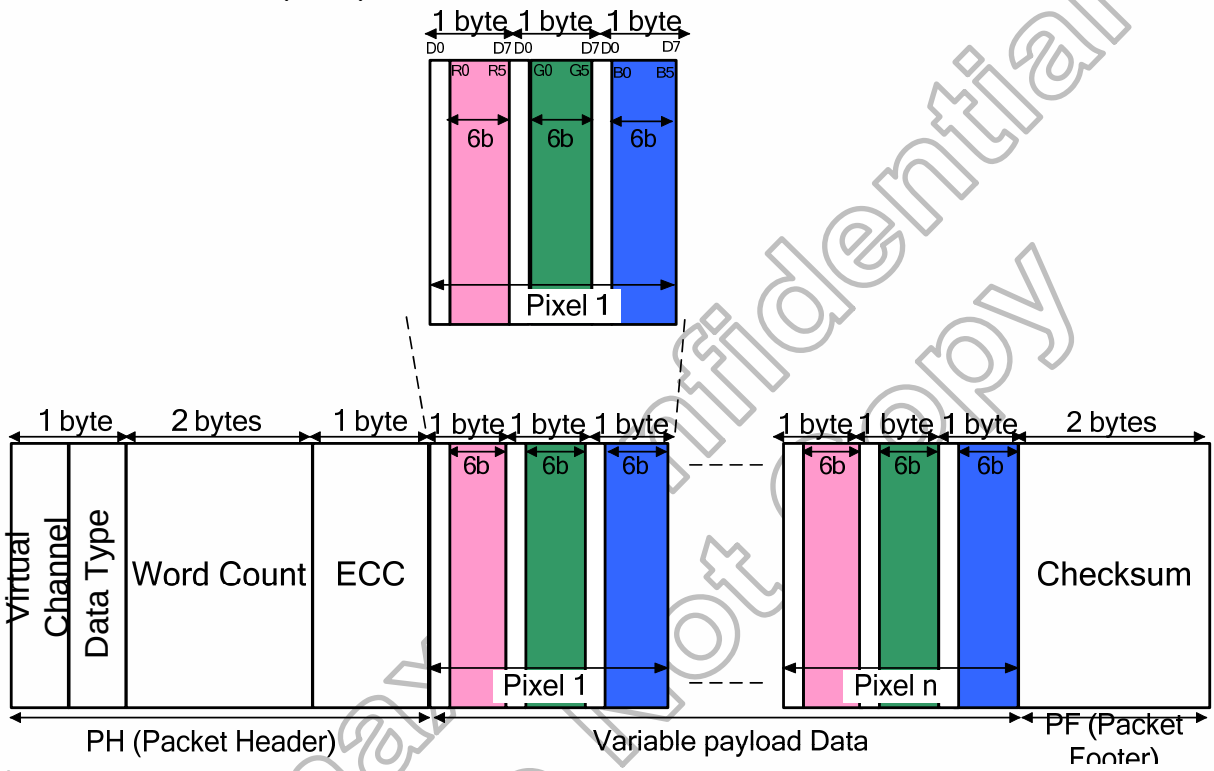

Note:
Within a color component, the LSB is sent first, the MSB last and With this format, pixel boundaries line up with byte boundaries every three bytes.

Himax Confidential
Do Not Copy

Packed Pixel Stream, 24bit Format		
Data Type, Hex	**Function Description**	**Number of bytes**
3Eh	Packed Pixel Stream 24-Bit Format is used to transmit image data formatted as 24-bit pixels to a Video Mode display module. Pixel format is (8 bits) red, (8 bits) green and (8 bits) blue.	Up to 65541 bytes (DI + WC + ECC + DCS CMD. + Payload DATA + PF)

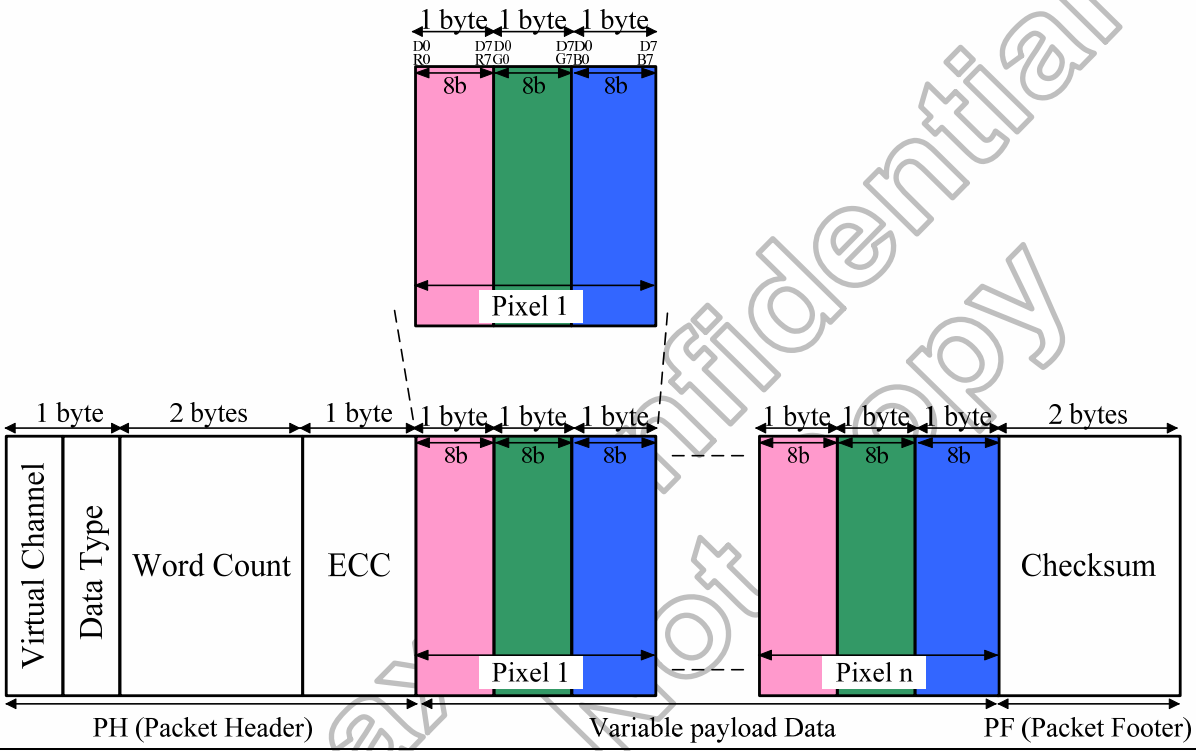

Note: Within a color component, the LSB is sent first, the MSB last and With this format, pixel boundaries line up with byte boundaries every three bytes.

Himax Confidential
Do Not Copy

4.3.2 Peripheral to Processor (Reverse Direction)

All Command Mode systems require bidirectional capability for returning READ data, ACK or error information to the host processor. Command Mode that use DCS shall have a bidirectional data path. Short packets and the header of Long packets may use ECC and Checksum to provide a higher level of data integrity. The Checksum feature enables detection of errors in the payload of Long packets. The packet structure for peripheral-to-processor transactions is the same as for the processor-to-peripheral direction.

In general, if the host processor completes a transmission to the peripheral with **BTA** asserted, the peripheral shall respond with one or more appropriate packet(s), and then return bus ownership to the host processor. If **BTA** is not asserted following a transmission from the host processor, the peripheral shall not communicate an Acknowledge or other error information back to the host processor.

The processor-to-peripheral transactions with **BTA** asserted, can contain under form.

1. Following a **non-Read command** in which no error was detected, the peripheral shall respond with Acknowledge.
2. Following a **Read request** in which no error was detected, the peripheral shall send the requested READ data.
3. Following a **Read request in which the ECC error** was detected and corrected, the Peripheral shall send the requested READ data in a Long or Short packet, followed by a 4-byte (Acknowledge with Error Report) packet in the same LP transmission. The Error Report shall have the ECC Error flag set.
4. Following a **non-Read command in which the ECC error** was detected and corrected, the peripheral shall proceed to execute the command, and shall respond to BTA by sending a 4-byte (Acknowledge with Error Report) packet, the Error Report shall have the ECC Error flag set.
5. Following any command in which **SoT Error, SoT Sync Error, EoT Sync Error, LP Transmit Sync Error, checksum error or DSI VC ID Invalid** was detected, or the DSI command was not recognized, the peripheral shall send a 4-byte Acknowledge with Error Report response, with the appropriate error flags set in the two-byte error field. Only the ACK/Error Report packet shall be transmitted; no read or write accesses shall take place on the peripheral in response.

Which,

1. “Acknowledge” includes 2 bytes which are DI (VC + Acknowledge Data Type) and ECC.
2. “Acknowledge with Error Report” include 4 bytes which are DI, 2 bytes Error report and ECC.
3. “Response to Read Request” contains 2 types which are Short packet and long packet.

Himax Confidential
Do Not Copy

This information contained herein is the exclusive property of Himax and shall not be distributed, reproduced, or disclosed in whole or in part without prior written permission of Himax.

An error report is comprised of two bytes following the DI byte, with an ECC byte following the error report bytes. Table 5.4 shows the Error Report Bit Definitions.

Bit	Description
0	SoT Error
1	SoT Sync Error
2	EoT Sync Error
3	Escape Mode Entry Command Error
4	Low-Power Transmit Sync Error
5	HS Receive Timeout Error
6	reserved
7	reserved
8	ECC Error, single-bit (detected and corrected)
9	ECC Error, multi-bit (detected, not corrected)
10	Checksum Error (long packet only)
11	DSI Data Type Not Recognized
12	DSI VC ID Invalid
13	reserved
14	reserved
15	reserved

Table 4.3 shows the Error Report Bit Definitions.

Data Type, Hex	Data Type, Binary	Description Packet	Size
02h	00 0010	Acknowledge with Error Report	Short
1Ch	01 1100	DCS Long READ Response	Long

Table 4.4 The complete set of peripheral-to-processor Data Types.

Acknowledge types

Data Type, Hex	Function Description	Number of bytes
02	Get Acknowledge with Error report when Error occurs from processor transmission.	4 bytes (DI + Error report + ECC)

DCS Command Read types

Data Type, Hex	Function Description	Number of bytes
1Ch	This is the long-packet response to DCS Read Request.	Up to 9 bytes (DI + Data0 ~ Data6 + ECC)

Himax Confidential
Do Not Copy

This information contained herein is the exclusive property of Himax and shall not be distributed, reproduced, or disclosed in whole or in part without prior written permission of Himax.

5. Function Description

5.1 Gamma characteristic correction function

The HX83xx-A offers two kinds of Gamma adjustment ways to come to accord with LC characteristic, one kind is through Source Driver directly, another one is adjusted by the digital gamma correction. The Gamma adjustment way is select by internal register DGC_EN bit.

A) Gamma adjustment of Source Driver

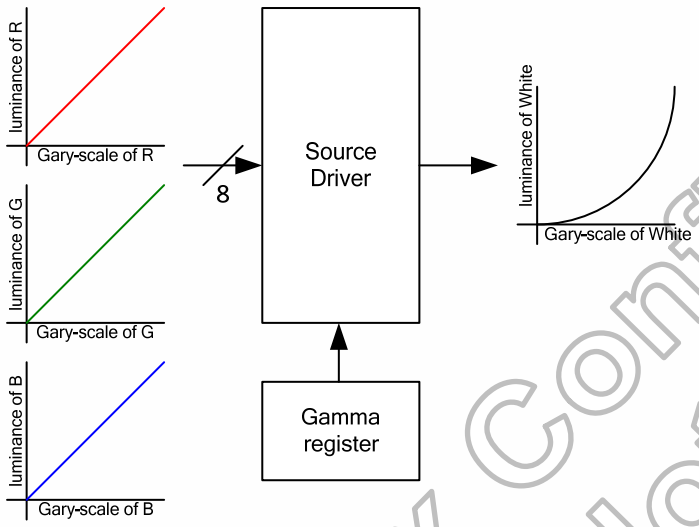

B) Gamma adjustment of Digital Gamma Correction

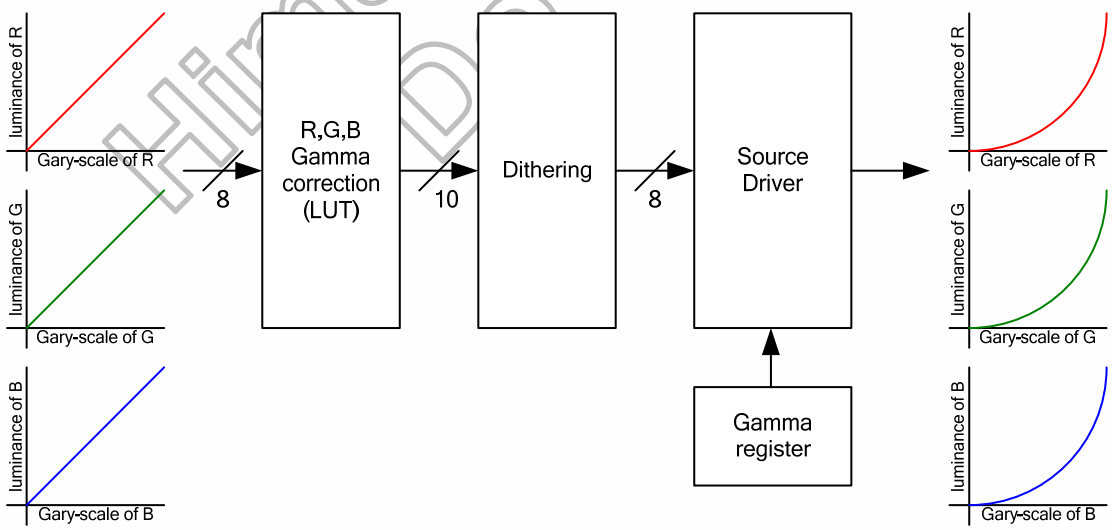

Figure 5.1 Gamma adjustments different of source driver with digital gamma correction

Himax Confidential
Do Not Copy

This information contained herein is the exclusive property of Himax and shall not be distributed, reproduced, or disclosed in whole or in part without prior written permission of Himax.

5.2 Gamma Characteristic Correction Function

The HX83xx-A incorporates gamma adjustment function for the 16,777,216-color display. Gamma adjustment operation is implemented by deciding the 17 grayscale levels firstly in gamma adjustment control registers to match the LCD panel. Then total 512 grayscale levels are generated in grayscale voltage generator. These registers are available for both polarities.

Himax Confidential
Do Not Copy

This information contained herein is the exclusive property of Himax and shall not be distributed, reproduced, or disclosed in whole or in part without prior written permission of Himax.

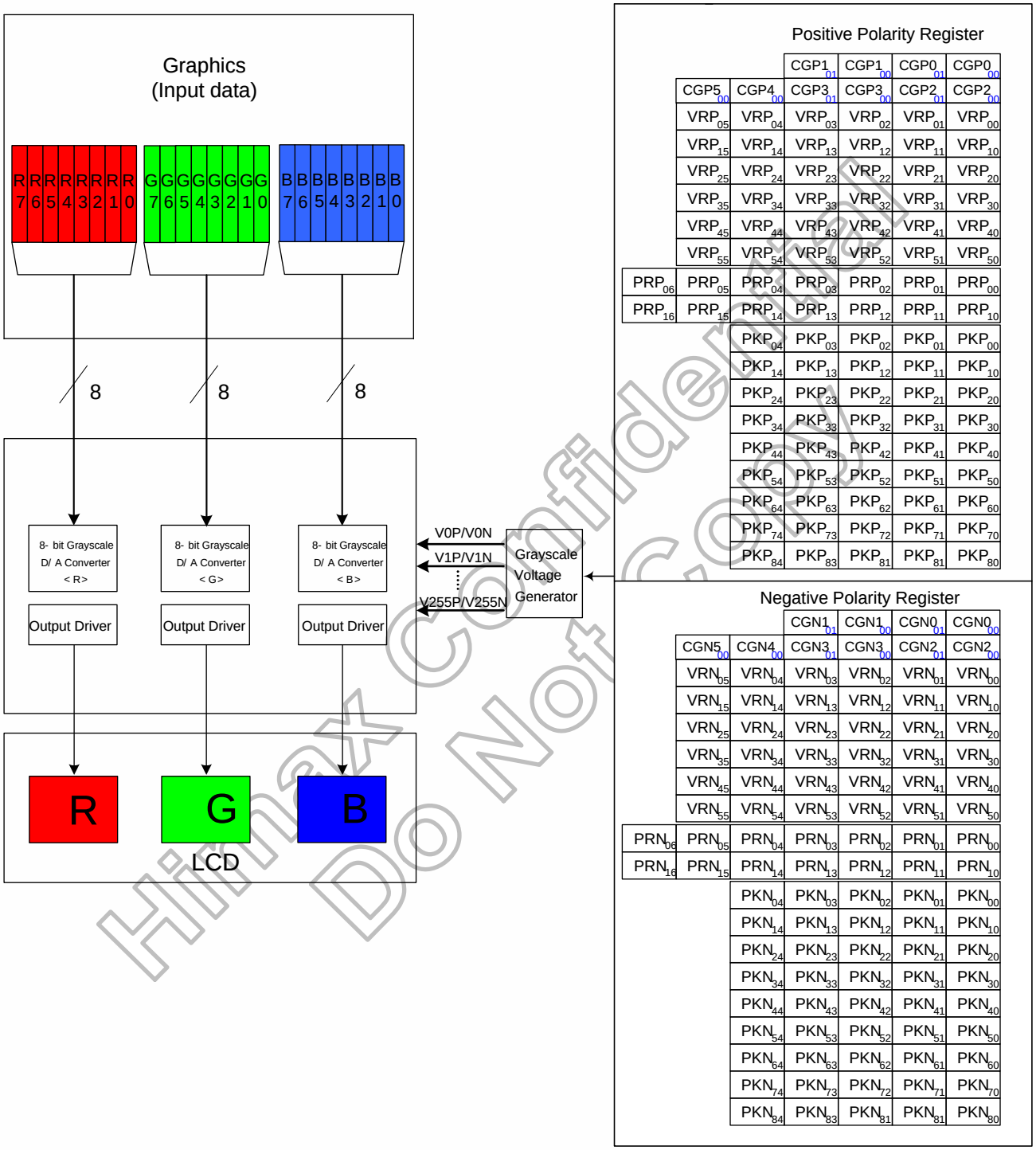

Figure 5.2 Grayscale Control

Himax Confidential
Do Not Copy

Gamma-Characteristics Adjustment Register

This HX83xx-A has register groups for specifying a series grayscale voltage that meets the Gamma-characteristics for the LCD panel used. These registers are divided into two groups, which correspond to the gradient, amplitude, and macro adjustment of the voltage for the grayscale characteristics. The polarity of each register can be specified independently.

(1) Offset adjustment registers

The offset adjustment variable registers are used to adjust the amplitude of the grayscale voltage. This function is implemented by controlling these variable resisters in the top and bottom of the gamma resister stream for reference gamma voltage generation. These registers are available for both positive and negative polarities.

(2) Gamma center adjustment registers

The gamma center adjustment registers are used to adjust the reference gamma voltage in the middle level of grayscale without changing the dynamic range. This function is implemented by choosing one input of 88 to 1 selector in the gamma resister stream for reference gamma voltage generation. These registers are available for both positive and negative polarities.

(3) Gamma macro adjustment registers

The gamma macro adjustment registers can be used for fine adjustment of the reference gamma voltage. This function is implemented by controlling the 32-to-1 selectors (PKP/N0~5), each of which has 5 inputs and generates one reference voltage output (Vg(P/N)3, 7, 19, 25, 32, 38, 44, 56, 60).

Register Groups	Positive Polarity	Negative Polarity	Description
Center Adjustment	PRP0 6-0	PRN0 6-0	Variable resistor (PRP/N0) for center adjustment
	PRP1 6-0	PRN1 6-0	Variable resistor (PRP/N1)for center adjustment
Macro Adjustment	PKP0 4-0	PKN0 4-0	32-to-1 selector (voltage level of grayscale 3)
	PKP1 4-0	PKN1 4-0	32-to-1 selector (voltage level of grayscale 7)
	PKP2 4-0	PKN2 4-0	32-to-1 selector (voltage level of grayscale 19)
	PKP3 4-0	PKN3 4-0	32-to-1 selector (voltage level of grayscale 25)
	PKP4 4-0	PKN4 4-0	32-to-1 selector (voltage level of grayscale 32 for positive polarity and grayscale 31 for negative polarity)
	PKP5 4-0	PKN5 4-0	32-to-1 selector (voltage level of grayscale 38)
	PKP6 4-0	PKN6 4-0	32-to-1 selector (voltage level of grayscale 44)
	PKP7 4-0	PKN7 4-0	32-to-1 selector (voltage level of grayscale 56)
	PKP8 4-0	PKN8 4-0	32-to-1 selector (voltage level of grayscale 60)
Offset Adjustment	VRP0 5-0	VRN0 5-0	Variable resistor (VRP/N0)for offset adjustment
	VRP1 5-0	VRN1 5-0	Variable resistor (VRP/N1)for offset adjustment
	VRP2 5-0	VRN2 5-0	Variable resistor (VRP/N2)for offset adjustment
	VRP3 5-0	VRN3 5-0	Variable resistor (VRP/N3)for offset adjustment
	VRP4 5-0	VRN4 5-0	Variable resistor (VRP/N4)for offset adjustment
	VRP5 5-0	VRN5 5-0	Variable resistor (VRP/N5)for offset adjustment

Table 5.1 Gamma-Adjustment Registers

Himax Confidential
Do Not Copy

This information contained herein is the exclusive property of Himax and shall not be distributed, reproduced, or disclosed in whole or in part without prior written permission of Himax.

Gamma Resister Stream and 8 to 1 Selector

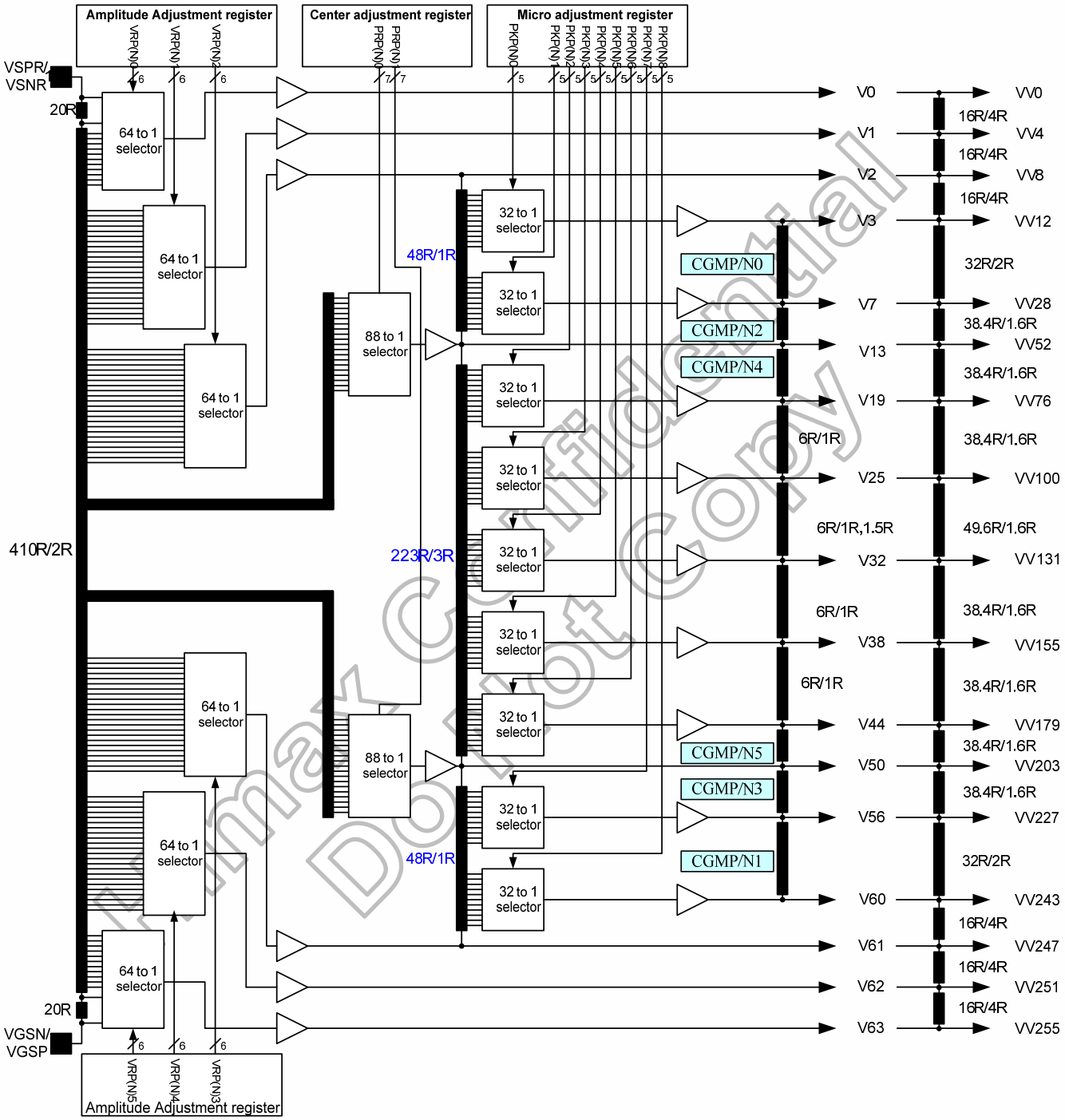

Figure 5.3 Gamma Resister Stream and Gamma Reference Voltage

Himax Confidential
Do Not Copy

CGMP/N0	0	1	2	3
	1R	3R	3.5R	3.5R
	1R	2.5R	2.5R	2.5R
	1R	2R	1.8R	2R
	1R	2R	1.5R	2R

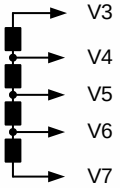

CGMP/N1	0	1	2	3
	1R	2R	1.5R	2R
	1R	2R	1.8R	2R
	1R	2.5R	2.5R	2.5R
	1R	3R	3.5R	3.5R

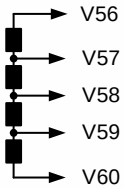

CGMP/N2	0	1	2	3
	1R	3R	4R	4.5R
	1R	3R	3R	4R
	1R	2.5R	3R	3R
	1R	2.5R	3R	3R
	1R	2.5R	2.5R	2.5R
	1R	2.5R	2.5R	2.5R

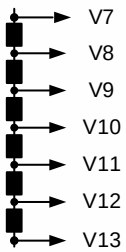

CGMP/N3	0	1	2	3
	1R	2.5R	2.5R	2.5R
	1R	2.5R	2.5R	2.5R
	1R	2.5R	3R	3R
	1R	2.5R	3R	3R
	1R	3R	3R	4R
	1R	3R	4R	4.5R

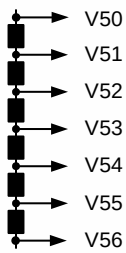

CGMP/N4	0	1
	1R	1.5R
	1R	1R
	1R	1R
	1R	1R
	1R	1R
	1R	1R

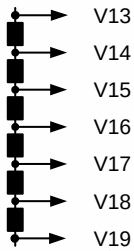

CGMP/N5	0	1
	1R	1R
	1R	1R
	1R	1R
	1R	1R
	1R	1R
	1R	1.5R

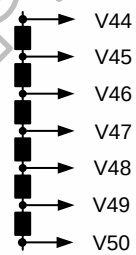

Figure 5.4 Gamma Resister Stream

Himax Confidential
Do Not Copy

Variable Resister

There are two types of variable resistors, one is for center adjustment and the other is for offset adjustment. The resistances are decided by setting values in the center adjustment, offset adjustment registers. Their relationships are shown below.

Value in Register VR(P/N)0 5-0	Resistance VR(P/N)0
000000	0R
000001	20R
000010	22R
000011	24R
•	•
•	•
011101	76R
011110	78R
011111	80R
100000	82R
100001	84R
100010	86R
•	•
•	•
111101	140R
111110	142R
111111	144R

Value in Register VR(P/N)1 5-0	Resistance VR(P/N)1
000000	0R
000001	2R
000010	4R
000011	6R
•	•
•	•
011101	58R
011110	60R
011111	62R
100000	64R
100001	66R
100010	68R
•	•
•	•
111101	122R
111110	124R
111111	126R

Value in Register VR(P/N)2 5-0	Resistance VR(P/N)2
000000	0R
000001	2R
000010	4R
000011	6R
•	•
•	•
011101	58R
011110	60R
011111	62R
100000	64R
100001	66R
100010	68R
•	•
•	•
111101	122R
111110	124R
111111	126R

Value in Register VR(P/N)3 5-0	Resistance VR(P/N)3
000000	0R
000001	2R
000010	4R
•	•
•	•
011101	58R
011110	60R
011111	62R
100000	64R
100001	66R
100010	68R
•	•
•	•
111100	120R
111101	122R
111110	124R
111111	126R

Value in Register VR(P/N)4 5-0	Resistance VR(P/N)4
000000	0R
000001	2R
000010	4R
•	•
•	•
011101	58R
011110	60R
011111	62R
100000	64R
100001	66R
100010	68R
•	•
•	•
111100	120R
111101	122R
111110	124R
111111	126R

Value in Register VR(P/N)5 5-0	Resistance VR(P/N)2
000000	0R
000001	2R
000010	4R
•	•
•	•
011101	58R
011110	60R
011111	62R
100000	64R
100001	66R
100010	68R
•	•
•	•
111100	120R
111101	122R
111110	124R
111111	144R

Table 5.2 Offset Adjustment 0 ~ 5

Value in Register PR(P/N)0 6-0	Resistance PR(P/N)0
0000000	0R
0000001	2R
0000010	4R
•	•
•	•
1010101	170R
1010110	172R
1010111	174R

Value in Register PR(P/N)1 6-0	Resistance PR(P/N)1
0000000	0R
0000001	2R
0000010	4R
•	•
•	•
1010101	170R
1010110	172R
1010111	174R

Table 5.3 Center Adjustment

Himax Confidential
Do Not Copy

This information contained herein is the exclusive property of Himax and shall not be distributed, reproduced, or disclosed in whole or in part without prior written permission of Himax.

The grayscale levels are determined by the following formulas:

Reference Voltage	Macro Adjustment Value	VinP/N0 Formula
VinP0	VRP0 5-0 = 000000	VSPR
	VRP0 5-0 = 000001	((450R - 20R) / 450R) * (VSPR - VGSP) + VGSP
	VRP0 5-0 = 000010	((450R - 22R) / 450R) * (VSPR - VGSP) + VGSP
	VRP0 5-0 = 000011	((450R - 24R) / 450R) * (VSPR - VGSP) + VGSP
	VRP0 5-0 = 000100	((450R - 26R) / 450R) * (VSPR - VGSP) + VGSP
	VRP0 5-0 = 000101	((450R - 28R) / 450R) * (VSPR - VGSP) + VGSP
	VRP0 5-0 = 000110	((450R - 30R) / 450R) * (VSPR - VGSP) + VGSP
	VRP0 5-0 = 000111	((450R - 32R) / 450R) * (VSPR - VGSP) + VGSP
	VRP0 5-0 = 001000	((450R - 34R) / 450R) * (VSPR - VGSP) + VGSP
	VRP0 5-0 = 001001	((450R - 36R) / 450R) * (VSPR - VGSP) + VGSP
	VRP0 5-0 = 001010	((450R - 38R) / 450R) * (VSPR - VGSP) + VGSP
	VRP0 5-0 = 001011	((450R - 40R) / 450R) * (VSPR - VGSP) + VGSP
	VRP0 5-0 = 001100	((450R - 42R) / 450R) * (VSPR - VGSP) + VGSP
	VRP0 5-0 = 001101	((450R - 44R) / 450R) * (VSPR - VGSP) + VGSP
	VRP0 5-0 = 001110	((450R - 46R) / 450R) * (VSPR - VGSP) + VGSP
	VRP0 5-0 = 001111	((450R - 48R) / 450R) * (VSPR - VGSP) + VGSP
	VRP0 5-0 = 010000	((450R - 50R) / 450R) * (VSPR - VGSP) + VGSP
	VRP0 5-0 = 010001	((450R - 52R) / 450R) * (VSPR - VGSP) + VGSP
	VRP0 5-0 = 010010	((450R - 54R) / 450R) * (VSPR - VGSP) + VGSP
	VRP0 5-0 = 010011	((450R - 56R) / 450R) * (VSPR - VGSP) + VGSP
	VRP0 5-0 = 010100	((450R - 58R) / 450R) * (VSPR - VGSP) + VGSP
	VRP0 5-0 = 010101	((450R - 60R) / 450R) * (VSPR - VGSP) + VGSP
	VRP0 5-0 = 010110	((450R - 62R) / 450R) * (VSPR - VGSP) + VGSP
	VRP0 5-0 = 010111	((450R - 64R) / 450R) * (VSPR - VGSP) + VGSP
	VRP0 5-0 = 011000	((450R - 66R) / 450R) * (VSPR - VGSP) + VGSP
	VRP0 5-0 = 011001	((450R - 68R) / 450R) * (VSPR - VGSP) + VGSP
	VRP0 5-0 = 011010	((450R - 70R) / 450R) * (VSPR - VGSP) + VGSP
	VRP0 5-0 = 011011	((450R - 72R) / 450R) * (VSPR - VGSP) + VGSP
	VRP0 5-0 = 011100	((450R - 74R) / 450R) * (VSPR - VGSP) + VGSP
	VRP0 5-0 = 011101	((450R - 76R) / 450R) * (VSPR - VGSP) + VGSP
	VRP0 5-0 = 011110	((450R - 78R) / 450R) * (VSPR - VGSP) + VGSP
	VRP0 5-0 = 011111	((450R - 80R) / 450R) * (VSPR - VGSP) + VGSP
	VRP0 5-0 = 100000	((450R - 82R) / 450R) * (VSPR - VGSP) + VGSP
	VRP0 5-0 = 100001	((450R - 84R) / 450R) * (VSPR - VGSP) + VGSP
	VRP0 5-0 = 100010	((450R - 86R) / 450R) * (VSPR - VGSP) + VGSP
	VRP0 5-0 = 100011	((450R - 88R) / 450R) * (VSPR - VGSP) + VGSP
	VRP0 5-0 = 100100	((450R - 90R) / 450R) * (VSPR - VGSP) + VGSP
	VRP0 5-0 = 100101	((450R - 92R) / 450R) * (VSPR - VGSP) + VGSP
	VRP0 5-0 = 100110	((450R - 94R) / 450R) * (VSPR - VGSP) + VGSP
	VRP0 5-0 = 100111	((450R - 96R) / 450R) * (VSPR - VGSP) + VGSP
	VRP0 5-0 = 101000	((450R - 98R) / 450R) * (VSPR - VGSP) + VGSP
	VRP0 5-0 = 101001	((450R - 100R) / 450R) * (VSPR - VGSP) + VGSP
	VRP0 5-0 = 101010	((450R - 102R) / 450R) * (VSPR - VGSP) + VGSP
	VRP0 5-0 = 101011	((450R - 104R) / 450R) * (VSPR - VGSP) + VGSP
	VRP0 5-0 = 101100	((450R - 106R) / 450R) * (VSPR - VGSP) + VGSP
	VRP0 5-0 = 101101	((450R - 108R) / 450R) * (VSPR - VGSP) + VGSP
	VRP0 5-0 = 101110	((450R - 110R) / 450R) * (VSPR - VGSP) + VGSP
	VRP0 5-0 = 101111	((450R - 112R) / 450R) * (VSPR - VGSP) + VGSP
	VRP0 5-0 = 110000	((450R - 114R) / 450R) * (VSPR - VGSP) + VGSP
	VRP0 5-0 = 110001	((450R - 116R) / 450R) * (VSPR - VGSP) + VGSP
	VRP0 5-0 = 110010	((450R - 118R) / 450R) * (VSPR - VGSP) + VGSP
	VRP0 5-0 = 110011	((450R - 120R) / 450R) * (VSPR - VGSP) + VGSP
	VRP0 5-0 = 110100	((450R - 122R) / 450R) * (VSPR - VGSP) + VGSP
	VRP0 5-0 = 110101	((450R - 124R) / 450R) * (VSPR - VGSP) + VGSP
	VRP0 5-0 = 110110	((450R - 126R) / 450R) * (VSPR - VGSP) + VGSP
	VRP0 5-0 = 110111	((450R - 128R) / 450R) * (VSPR - VGSP) + VGSP
	VRP0 5-0 = 111000	((450R - 130R) / 450R) * (VSPR - VGSP) + VGSP
	VRP0 5-0 = 111001	((450R - 132R) / 450R) * (VSPR - VGSP) + VGSP
	VRP0 5-0 = 111010	((450R - 134R) / 450R) * (VSPR - VGSP) + VGSP
	VRP0 5-0 = 111011	((450R - 136R) / 450R) * (VSPR - VGSP) + VGSP
	VRP0 5-0 = 111100	((450R - 138R) / 450R) * (VSPR - VGSP) + VGSP
	VRP0 5-0 = 111101	((450R - 140R) / 450R) * (VSPR - VGSP) + VGSP
	VRP0 5-0 = 111110	((450R - 142R) / 450R) * (VSPR - VGSP) + VGSP
	VRP0 5-0 = 111111	((450R - 144R) / 450R) * (VSPR - VGSP) + VGSP

Table 5.4 VinP 0

Himax Confidential
Do Not Copy

Reference Voltage	Macro Adjustment Value	VinP/N1 Formula
VinP1	VRP1 5-0 = 000000	(430R / 450R) * (VSPR - VGSP) + VGSP
	VRP1 5-0 = 000001	((430R - 2R) / 450R) * (VSPR - VGSP) + VGSP
	VRP1 5-0 = 000010	((430R - 4R) / 450R) * (VSPR - VGSP) + VGSP
	VRP1 5-0 = 000011	((430R - 6R) / 450R) * (VSPR - VGSP) + VGSP
	VRP1 5-0 = 000100	((430R - 8R) / 450R) * (VSPR - VGSP) + VGSP
	VRP1 5-0 = 000101	((430R - 10R) / 450R) * (VSPR - VGSP) + VGSP
	VRP1 5-0 = 000110	((430R - 12R) / 450R) * (VSPR - VGSP) + VGSP
	VRP1 5-0 = 000111	((430R - 14R) / 450R) * (VSPR - VGSP) + VGSP
	VRP1 5-0 = 001000	((430R - 16R) / 450R) * (VSPR - VGSP) + VGSP
	VRP1 5-0 = 001001	((430R - 18R) / 450R) * (VSPR - VGSP) + VGSP
	VRP1 5-0 = 001010	((430R - 20R) / 450R) * (VSPR - VGSP) + VGSP
	VRP1 5-0 = 001011	((430R - 22R) / 450R) * (VSPR - VGSP) + VGSP
	VRP1 5-0 = 001100	((430R - 24R) / 450R) * (VSPR - VGSP) + VGSP
	VRP1 5-0 = 001101	((430R - 26R) / 450R) * (VSPR - VGSP) + VGSP
	VRP1 5-0 = 001110	((430R - 28R) / 450R) * (VSPR - VGSP) + VGSP
	VRP1 5-0 = 001111	((430R - 30R) / 450R) * (VSPR - VGSP) + VGSP
	VRP1 5-0 = 010000	((430R - 32R) / 450R) * (VSPR - VGSP) + VGSP
	VRP1 5-0 = 010001	((430R - 34R) / 450R) * (VSPR - VGSP) + VGSP
	VRP1 5-0 = 010010	((430R - 36R) / 450R) * (VSPR - VGSP) + VGSP
	VRP1 5-0 = 010011	((430R - 38R) / 450R) * (VSPR - VGSP) + VGSP
	VRP1 5-0 = 010100	((430R - 40R) / 450R) * (VSPR - VGSP) + VGSP
	VRP1 5-0 = 010101	((430R - 42R) / 450R) * (VSPR - VGSP) + VGSP
	VRP1 5-0 = 010110	((430R - 44R) / 450R) * (VSPR - VGSP) + VGSP
	VRP1 5-0 = 010111	((430R - 46R) / 450R) * (VSPR - VGSP) + VGSP
	VRP1 5-0 = 011000	((430R - 48R) / 450R) * (VSPR - VGSP) + VGSP
	VRP1 5-0 = 011001	((430R - 50R) / 450R) * (VSPR - VGSP) + VGSP
	VRP1 5-0 = 011010	((430R - 52R) / 450R) * (VSPR - VGSP) + VGSP
	VRP1 5-0 = 011011	((430R - 54R) / 450R) * (VSPR - VGSP) + VGSP
	VRP1 5-0 = 011100	((430R - 56R) / 450R) * (VSPR - VGSP) + VGSP
	VRP1 5-0 = 011101	((430R - 58R) / 450R) * (VSPR - VGSP) + VGSP
	VRP1 5-0 = 011110	((430R - 60R) / 450R) * (VSPR - VGSP) + VGSP
	VRP1 5-0 = 011111	((430R - 62R) / 450R) * (VSPR - VGSP) + VGSP
	VRP1 5-0 = 100000	((430R - 64R) / 450R) * (VSPR - VGSP) + VGSP
	VRP1 5-0 = 100001	((430R - 66R) / 450R) * (VSPR - VGSP) + VGSP
	VRP1 5-0 = 100010	((430R - 68R) / 450R) * (VSPR - VGSP) + VGSP
	VRP1 5-0 = 100011	((430R - 70R) / 450R) * (VSPR - VGSP) + VGSP
	VRP1 5-0 = 100100	((430R - 72R) / 450R) * (VSPR - VGSP) + VGSP
	VRP1 5-0 = 100101	((430R - 74R) / 450R) * (VSPR - VGSP) + VGSP
	VRP1 5-0 = 100110	((430R - 76R) / 450R) * (VSPR - VGSP) + VGSP
	VRP1 5-0 = 100111	((430R - 78R) / 450R) * (VSPR - VGSP) + VGSP
	VRP1 5-0 = 101000	((430R - 80R) / 450R) * (VSPR - VGSP) + VGSP
	VRP1 5-0 = 101001	((430R - 82R) / 450R) * (VSPR - VGSP) + VGSP
	VRP1 5-0 = 101010	((430R - 84R) / 450R) * (VSPR - VGSP) + VGSP
	VRP1 5-0 = 101011	((430R - 86R) / 450R) * (VSPR - VGSP) + VGSP
	VRP1 5-0 = 101100	((430R - 88R) / 450R) * (VSPR - VGSP) + VGSP
	VRP1 5-0 = 101101	((430R - 90R) / 450R) * (VSPR - VGSP) + VGSP
	VRP1 5-0 = 101110	((430R - 92R) / 450R) * (VSPR - VGSP) + VGSP
	VRP1 5-0 = 101111	((430R - 94R) / 450R) * (VSPR - VGSP) + VGSP
	VRP1 5-0 = 110000	((430R - 96R) / 450R) * (VSPR - VGSP) + VGSP
	VRP1 5-0 = 110001	((430R - 98R) / 450R) * (VSPR - VGSP) + VGSP
	VRP1 5-0 = 110010	((430R - 100R) / 450R) * (VSPR - VGSP) + VGSP
	VRP1 5-0 = 110011	((430R - 102R) / 450R) * (VSPR - VGSP) + VGSP
	VRP1 5-0 = 110100	((430R - 104R) / 450R) * (VSPR - VGSP) + VGSP
	VRP1 5-0 = 110101	((430R - 106R) / 450R) * (VSPR - VGSP) + VGSP
	VRP1 5-0 = 110110	((430R - 108R) / 450R) * (VSPR - VGSP) + VGSP
	VRP1 5-0 = 110111	((430R - 110R) / 450R) * (VSPR - VGSP) + VGSP
	VRP1 5-0 = 111000	((430R - 112R) / 450R) * (VSPR - VGSP) + VGSP
	VRP1 5-0 = 111001	((430R - 114R) / 450R) * (VSPR - VGSP) + VGSP
	VRP1 5-0 = 111010	((430R - 116R) / 450R) * (VSPR - VGSP) + VGSP
	VRP1 5-0 = 111011	((430R - 118R) / 450R) * (VSPR - VGSP) + VGSP
	VRP1 5-0 = 111100	((430R - 120R) / 450R) * (VSPR - VGSP) + VGSP
	VRP1 5-0 = 111101	((430R - 122R) / 450R) * (VSPR - VGSP) + VGSP
	VRP1 5-0 = 111110	((430R - 124R) / 450R) * (VSPR - VGSP) + VGSP
	VRP1 5-0 = 111111	((430R - 126R) / 450R) * (VSPR - VGSP) + VGSP

Table 5.5 VinP 1

Himax Confidential
This information contained herein is the exclusive property of Himax and shall not be distributed, reproduced, or disclosed in whole or in part without prior written permission of Himax.

Reference Voltage	Macro Adjustment Value	VinP/N2 Formula
VinP2	VRP2 5-0 = 000000	(420R / 450R) * (VSPR - VGSP) + VGSP
	VRP2 5-0 = 000001	((420R - 2R) / 450R) * (VSPR - VGSP) + VGSP
	VRP2 5-0 = 000010	((420R - 4R) / 450R) * (VSPR - VGSP) + VGSP
	VRP2 5-0 = 000011	((420R - 6R) / 450R) * (VSPR - VGSP) + VGSP
	VRP2 5-0 = 000100	((420R - 8R) / 450R) * (VSPR - VGSP) + VGSP
	VRP2 5-0 = 000101	((420R - 10R) / 450R) * (VSPR - VGSP) + VGSP
	VRP2 5-0 = 000110	((420R - 12R) / 450R) * (VSPR - VGSP) + VGSP
	VRP2 5-0 = 000111	((420R - 14R) / 450R) * (VSPR - VGSP) + VGSP
	VRP2 5-0 = 001000	((420R - 16R) / 450R) * (VSPR - VGSP) + VGSP
	VRP2 5-0 = 001001	((420R - 18R) / 450R) * (VSPR - VGSP) + VGSP
	VRP2 5-0 = 001010	((420R - 20R) / 450R) * (VSPR - VGSP) + VGSP
	VRP2 5-0 = 001011	((420R - 22R) / 450R) * (VSPR - VGSP) + VGSP
	VRP2 5-0 = 001100	((420R - 24R) / 450R) * (VSPR - VGSP) + VGSP
	VRP2 5-0 = 001101	((420R - 26R) / 450R) * (VSPR - VGSP) + VGSP
	VRP2 5-0 = 001110	((420R - 28R) / 450R) * (VSPR - VGSP) + VGSP
	VRP2 5-0 = 001111	((420R - 30R) / 450R) * (VSPR - VGSP) + VGSP
	VRP2 5-0 = 010000	((420R - 32R) / 450R) * (VSPR - VGSP) + VGSP
	VRP2 5-0 = 010001	((420R - 34R) / 450R) * (VSPR - VGSP) + VGSP
	VRP2 5-0 = 010010	((420R - 36R) / 450R) * (VSPR - VGSP) + VGSP
	VRP2 5-0 = 010011	((420R - 38R) / 450R) * (VSPR - VGSP) + VGSP
	VRP2 5-0 = 010100	((420R - 40R) / 450R) * (VSPR - VGSP) + VGSP
	VRP2 5-0 = 010101	((420R - 42R) / 450R) * (VSPR - VGSP) + VGSP
	VRP2 5-0 = 010110	((420R - 44R) / 450R) * (VSPR - VGSP) + VGSP
	VRP2 5-0 = 010111	((420R - 46R) / 450R) * (VSPR - VGSP) + VGSP
	VRP2 5-0 = 011000	((420R - 48R) / 450R) * (VSPR - VGSP) + VGSP
	VRP2 5-0 = 011001	((420R - 50R) / 450R) * (VSPR - VGSP) + VGSP
	VRP2 5-0 = 011010	((420R - 52R) / 450R) * (VSPR - VGSP) + VGSP
	VRP2 5-0 = 011011	((420R - 54R) / 450R) * (VSPR - VGSP) + VGSP
	VRP2 5-0 = 011100	((420R - 56R) / 450R) * (VSPR - VGSP) + VGSP
	VRP2 5-0 = 011101	((420R - 58R) / 450R) * (VSPR - VGSP) + VGSP
	VRP2 5-0 = 011110	((420R - 60R) / 450R) * (VSPR - VGSP) + VGSP
	VRP2 5-0 = 011111	((420R - 62R) / 450R) * (VSPR - VGSP) + VGSP
	VRP2 5-0 = 100000	((420R - 64R) / 450R) * (VSPR - VGSP) + VGSP
	VRP2 5-0 = 100001	((420R - 66R) / 450R) * (VSPR - VGSP) + VGSP
	VRP2 5-0 = 100010	((420R - 68R) / 450R) * (VSPR - VGSP) + VGSP
	VRP2 5-0 = 100011	((420R - 70R) / 450R) * (VSPR - VGSP) + VGSP
	VRP2 5-0 = 100100	((420R - 72R) / 450R) * (VSPR - VGSP) + VGSP
	VRP2 5-0 = 100101	((420R - 74R) / 450R) * (VSPR - VGSP) + VGSP
	VRP2 5-0 = 100110	((420R - 76R) / 450R) * (VSPR - VGSP) + VGSP
	VRP2 5-0 = 100111	((420R - 78R) / 450R) * (VSPR - VGSP) + VGSP
	VRP2 5-0 = 101000	((420R - 80R) / 450R) * (VSPR - VGSP) + VGSP
	VRP2 5-0 = 101001	((420R - 82R) / 450R) * (VSPR - VGSP) + VGSP
	VRP2 5-0 = 101010	((420R - 84R) / 450R) * (VSPR - VGSP) + VGSP
	VRP2 5-0 = 101011	((420R - 86R) / 450R) * (VSPR - VGSP) + VGSP
	VRP2 5-0 = 101100	((420R - 88R) / 450R) * (VSPR - VGSP) + VGSP
	VRP2 5-0 = 101101	((420R - 90R) / 450R) * (VSPR - VGSP) + VGSP
	VRP2 5-0 = 101110	((420R - 92R) / 450R) * (VSPR - VGSP) + VGSP
	VRP2 5-0 = 101111	((420R - 94R) / 450R) * (VSPR - VGSP) + VGSP
	VRP2 5-0 = 110000	((420R - 96R) / 450R) * (VSPR - VGSP) + VGSP
	VRP2 5-0 = 110001	((420R - 98R) / 450R) * (VSPR - VGSP) + VGSP
	VRP2 5-0 = 110010	((420R - 100R) / 450R) * (VSPR - VGSP) + VGSP
	VRP2 5-0 = 110011	((420R - 102R) / 450R) * (VSPR - VGSP) + VGSP
	VRP2 5-0 = 110100	((420R - 104R) / 450R) * (VSPR - VGSP) + VGSP
	VRP2 5-0 = 110101	((420R - 106R) / 450R) * (VSPR - VGSP) + VGSP
	VRP2 5-0 = 110110	((420R - 108R) / 450R) * (VSPR - VGSP) + VGSP
	VRP2 5-0 = 110111	((420R - 110R) / 450R) * (VSPR - VGSP) + VGSP
	VRP2 5-0 = 111000	((420R - 112R) / 450R) * (VSPR - VGSP) + VGSP
	VRP2 5-0 = 111001	((420R - 114R) / 450R) * (VSPR - VGSP) + VGSP
	VRP2 5-0 = 111010	((420R - 116R) / 450R) * (VSPR - VGSP) + VGSP
	VRP2 5-0 = 111011	((420R - 118R) / 450R) * (VSPR - VGSP) + VGSP
	VRP2 5-0 = 111100	((420R - 120R) / 450R) * (VSPR - VGSP) + VGSP
	VRP2 5-0 = 111101	((420R - 122R) / 450R) * (VSPR - VGSP) + VGSP
	VRP2 5-0 = 111110	((420R - 124R) / 450R) * (VSPR - VGSP) + VGSP
	VRP2 5-0 = 111111	((420R - 126R) / 450R) * (VSPR - VGSP) + VGSP

Table 5.6 VinP 2

Himax Confidential
This information contained herein is the exclusive property of Himax and shall not be distributed, reproduced, or disclosed in whole or in part without prior written permission of Himax.

Reference Voltage	Macro Adjustment Value	VinP/N14 Formula
VinP14	VRP3 5-0 = 000000	(156R / 450R) * (VSPR - VGSP) + VGSP
	VRP3 5-0 = 000001	((156R - 2R) / 450R) * (VSPR - VGSP) + VGSP
	VRP3 5-0 = 000010	((156R - 4R) / 450R) * (VSPR - VGSP) + VGSP
	VRP3 5-0 = 000011	((156R - 6R) / 450R) * (VSPR - VGSP) + VGSP
	VRP3 5-0 = 000100	((156R - 8R) / 450R) * (VSPR - VGSP) + VGSP
	VRP3 5-0 = 000101	((156R - 10R) / 450R) * (VSPR - VGSP) + VGSP
	VRP3 5-0 = 000110	((156R - 12R) / 450R) * (VSPR - VGSP) + VGSP
	VRP3 5-0 = 000111	((156R - 14R) / 450R) * (VSPR - VGSP) + VGSP
	VRP3 5-0 = 001000	((156R - 16R) / 450R) * (VSPR - VGSP) + VGSP
	VRP3 5-0 = 001001	((156R - 18R) / 450R) * (VSPR - VGSP) + VGSP
	VRP3 5-0 = 001010	((156R - 20R) / 450R) * (VSPR - VGSP) + VGSP
	VRP3 5-0 = 001011	((156R - 22R) / 450R) * (VSPR - VGSP) + VGSP
	VRP3 5-0 = 001100	((156R - 24R) / 450R) * (VSPR - VGSP) + VGSP
	VRP3 5-0 = 001101	((156R - 26R) / 450R) * (VSPR - VGSP) + VGSP
	VRP3 5-0 = 001110	((156R - 28R) / 450R) * (VSPR - VGSP) + VGSP
	VRP3 5-0 = 001111	((156R - 30R) / 450R) * (VSPR - VGSP) + VGSP
	VRP3 5-0 = 010000	((156R - 32R) / 450R) * (VSPR - VGSP) + VGSP
	VRP3 5-0 = 010001	((156R - 34R) / 450R) * (VSPR - VGSP) + VGSP
	VRP3 5-0 = 010010	((156R - 36R) / 450R) * (VSPR - VGSP) + VGSP
	VRP3 5-0 = 010011	((156R - 38R) / 450R) * (VSPR - VGSP) + VGSP
	VRP3 5-0 = 010100	((156R - 40R) / 450R) * (VSPR - VGSP) + VGSP
	VRP3 5-0 = 010101	((156R - 42R) / 450R) * (VSPR - VGSP) + VGSP
	VRP3 5-0 = 010110	((156R - 44R) / 450R) * (VSPR - VGSP) + VGSP
	VRP3 5-0 = 010111	((156R - 46R) / 450R) * (VSPR - VGSP) + VGSP
	VRP3 5-0 = 011000	((156R - 48R) / 450R) * (VSPR - VGSP) + VGSP
	VRP3 5-0 = 011001	((156R - 50R) / 450R) * (VSPR - VGSP) + VGSP
	VRP3 5-0 = 011010	((156R - 52R) / 450R) * (VSPR - VGSP) + VGSP
	VRP3 5-0 = 011011	((156R - 54R) / 450R) * (VSPR - VGSP) + VGSP
	VRP3 5-0 = 011100	((156R - 56R) / 450R) * (VSPR - VGSP) + VGSP
	VRP3 5-0 = 011101	((156R - 58R) / 450R) * (VSPR - VGSP) + VGSP
	VRP3 5-0 = 011110	((156R - 60R) / 450R) * (VSPR - VGSP) + VGSP
	VRP3 5-0 = 011111	((156R - 62R) / 450R) * (VSPR - VGSP) + VGSP
	VRP3 5-0 = 100000	((156R - 64R) / 450R) * (VSPR - VGSP) + VGSP
	VRP3 5-0 = 100001	((156R - 66R) / 450R) * (VSPR - VGSP) + VGSP
	VRP3 5-0 = 100010	((156R - 68R) / 450R) * (VSPR - VGSP) + VGSP
	VRP3 5-0 = 100011	((156R - 70R) / 450R) * (VSPR - VGSP) + VGSP
	VRP3 5-0 = 100100	((156R - 72R) / 450R) * (VSPR - VGSP) + VGSP
	VRP3 5-0 = 100101	((156R - 74R) / 450R) * (VSPR - VGSP) + VGSP
	VRP3 5-0 = 100110	((156R - 76R) / 450R) * (VSPR - VGSP) + VGSP
	VRP3 5-0 = 100111	((156R - 78R) / 450R) * (VSPR - VGSP) + VGSP
	VRP3 5-0 = 101000	((156R - 80R) / 450R) * (VSPR - VGSP) + VGSP
	VRP3 5-0 = 101001	((156R - 82R) / 450R) * (VSPR - VGSP) + VGSP
	VRP3 5-0 = 101010	((156R - 84R) / 450R) * (VSPR - VGSP) + VGSP
	VRP3 5-0 = 101011	((156R - 86R) / 450R) * (VSPR - VGSP) + VGSP
	VRP3 5-0 = 101100	((156R - 88R) / 450R) * (VSPR - VGSP) + VGSP
	VRP3 5-0 = 101101	((156R - 90R) / 450R) * (VSPR - VGSP) + VGSP
	VRP3 5-0 = 101110	((156R - 92R) / 450R) * (VSPR - VGSP) + VGSP
	VRP3 5-0 = 101111	((156R - 94R) / 450R) * (VSPR - VGSP) + VGSP
	VRP3 5-0 = 110000	((156R - 96R) / 450R) * (VSPR - VGSP) + VGSP
	VRP3 5-0 = 110001	((156R - 98R) / 450R) * (VSPR - VGSP) + VGSP
	VRP3 5-0 = 110010	((156R - 100R) / 450R) * (VSPR - VGSP) + VGSP
	VRP3 5-0 = 110011	((156R - 102R) / 450R) * (VSPR - VGSP) + VGSP
	VRP3 5-0 = 110100	((156R - 104R) / 450R) * (VSPR - VGSP) + VGSP
	VRP3 5-0 = 110101	((156R - 106R) / 450R) * (VSPR - VGSP) + VGSP
	VRP3 5-0 = 110110	((156R - 108R) / 450R) * (VSPR - VGSP) + VGSP
	VRP3 5-0 = 110111	((156R - 110R) / 450R) * (VSPR - VGSP) + VGSP
	VRP3 5-0 = 111000	((156R - 112R) / 450R) * (VSPR - VGSP) + VGSP
	VRP3 5-0 = 111001	((156R - 114R) / 450R) * (VSPR - VGSP) + VGSP
	VRP3 5-0 = 111010	((156R - 116R) / 450R) * (VSPR - VGSP) + VGSP
	VRP3 5-0 = 111011	((156R - 118R) / 450R) * (VSPR - VGSP) + VGSP
	VRP3 5-0 = 111100	((156R - 120R) / 450R) * (VSPR - VGSP) + VGSP
	VRP3 5-0 = 111101	((156R - 122R) / 450R) * (VSPR - VGSP) + VGSP
	VRP3 5-0 = 111110	((156R - 124R) / 450R) * (VSPR - VGSP) + VGSP
	VRP3 5-0 = 111111	((156R - 126R) / 450R) * (VSPR - VGSP) + VGSP

Table 5.7 VinP 14

Himax Confidential
Do Not Copy

Reference Voltage	Macro Adjustment Value	VinP/N15Formula
VinP15	VRP4 5-0 = 000000	(146R / 450R) * (VSPR - VGSP) + VGSP
	VRP4 5-0 = 000001	((146R - 2R) / 450R) * (VSPR - VGSP) + VGSP
	VRP4 5-0 = 000010	((146R - 4R) / 450R) * (VSPR - VGSP) + VGSP
	VRP4 5-0 = 000011	((146R - 6R) / 450R) * (VSPR - VGSP) + VGSP
	VRP4 5-0 = 000100	((146R - 8R) / 450R) * (VSPR - VGSP) + VGSP
	VRP4 5-0 = 000101	((146R - 10R) / 450R) * (VSPR - VGSP) + VGSP
	VRP4 5-0 = 000110	((146R - 12R) / 450R) * (VSPR - VGSP) + VGSP
	VRP4 5-0 = 000111	((146R - 14R) / 450R) * (VSPR - VGSP) + VGSP
	VRP4 5-0 = 001000	((146R - 16R) / 450R) * (VSPR - VGSP) + VGSP
	VRP4 5-0 = 001001	((146R - 18R) / 450R) * (VSPR - VGSP) + VGSP
	VRP4 5-0 = 001010	((146R - 20R) / 450R) * (VSPR - VGSP) + VGSP
	VRP4 5-0 = 001011	((146R - 22R) / 450R) * (VSPR - VGSP) + VGSP
	VRP4 5-0 = 001100	((146R - 24R) / 450R) * (VSPR - VGSP) + VGSP
	VRP4 5-0 = 001101	((146R - 26R) / 450R) * (VSPR - VGSP) + VGSP
	VRP4 5-0 = 001110	((146R - 28R) / 450R) * (VSPR - VGSP) + VGSP
	VRP4 5-0 = 001111	((146R - 30R) / 450R) * (VSPR - VGSP) + VGSP
	VRP4 5-0 = 010000	((146R - 32R) / 450R) * (VSPR - VGSP) + VGSP
	VRP4 5-0 = 010001	((146R - 34R) / 450R) * (VSPR - VGSP) + VGSP
	VRP4 5-0 = 010010	((146R - 36R) / 450R) * (VSPR - VGSP) + VGSP
	VRP4 5-0 = 010011	((146R - 38R) / 450R) * (VSPR - VGSP) + VGSP
	VRP4 5-0 = 010100	((146R - 40R) / 450R) * (VSPR - VGSP) + VGSP
	VRP4 5-0 = 010101	((146R - 42R) / 450R) * (VSPR - VGSP) + VGSP
	VRP4 5-0 = 010110	((146R - 44R) / 450R) * (VSPR - VGSP) + VGSP
	VRP4 5-0 = 010111	((146R - 46R) / 450R) * (VSPR - VGSP) + VGSP
	VRP4 5-0 = 011000	((146R - 48R) / 450R) * (VSPR - VGSP) + VGSP
	VRP4 5-0 = 011001	((146R - 50R) / 450R) * (VSPR - VGSP) + VGSP
	VRP4 5-0 = 011010	((146R - 52R) / 450R) * (VSPR - VGSP) + VGSP
	VRP4 5-0 = 011011	((146R - 54R) / 450R) * (VSPR - VGSP) + VGSP
	VRP4 5-0 = 011100	((146R - 56R) / 450R) * (VSPR - VGSP) + VGSP
	VRP4 5-0 = 011101	((146R - 58R) / 450R) * (VSPR - VGSP) + VGSP
	VRP4 5-0 = 011110	((146R - 60R) / 450R) * (VSPR - VGSP) + VGSP
	VRP4 5-0 = 011111	((146R - 62R) / 450R) * (VSPR - VGSP) + VGSP
	VRP4 5-0 = 100000	((146R - 64R) / 450R) * (VSPR - VGSP) + VGSP
	VRP4 5-0 = 100001	((146R - 66R) / 450R) * (VSPR - VGSP) + VGSP
	VRP4 5-0 = 100010	((146R - 68R) / 450R) * (VSPR - VGSP) + VGSP
	VRP4 5-0 = 100011	((146R - 70R) / 450R) * (VSPR - VGSP) + VGSP
	VRP4 5-0 = 100100	((146R - 72R) / 450R) * (VSPR - VGSP) + VGSP
	VRP4 5-0 = 100101	((146R - 74R) / 450R) * (VSPR - VGSP) + VGSP
	VRP4 5-0 = 100110	((146R - 76R) / 450R) * (VSPR - VGSP) + VGSP
	VRP4 5-0 = 100111	((146R - 78R) / 450R) * (VSPR - VGSP) + VGSP
	VRP4 5-0 = 101000	((146R - 80R) / 450R) * (VSPR - VGSP) + VGSP
	VRP4 5-0 = 101001	((146R - 82R) / 450R) * (VSPR - VGSP) + VGSP
	VRP4 5-0 = 101010	((146R - 84R) / 450R) * (VSPR - VGSP) + VGSP
	VRP4 5-0 = 101011	((146R - 86R) / 450R) * (VSPR - VGSP) + VGSP
	VRP4 5-0 = 101100	((146R - 88R) / 450R) * (VSPR - VGSP) + VGSP
	VRP4 5-0 = 101101	((146R - 90R) / 450R) * (VSPR - VGSP) + VGSP
	VRP4 5-0 = 101110	((146R - 92R) / 450R) * (VSPR - VGSP) + VGSP
	VRP4 5-0 = 101111	((146R - 94R) / 450R) * (VSPR - VGSP) + VGSP
	VRP4 5-0 = 110000	((146R - 96R) / 450R) * (VSPR - VGSP) + VGSP
	VRP4 5-0 = 110001	((146R - 98R) / 450R) * (VSPR - VGSP) + VGSP
	VRP4 5-0 = 110010	((146R - 100R) / 450R) * (VSPR - VGSP) + VGSP
	VRP4 5-0 = 110011	((146R - 102R) / 450R) * (VSPR - VGSP) + VGSP
	VRP4 5-0 = 110100	((146R - 104R) / 450R) * (VSPR - VGSP) + VGSP
	VRP4 5-0 = 110101	((146R - 106R) / 450R) * (VSPR - VGSP) + VGSP
	VRP4 5-0 = 110110	((146R - 108R) / 450R) * (VSPR - VGSP) + VGSP
	VRP4 5-0 = 110111	((146R - 110R) / 450R) * (VSPR - VGSP) + VGSP
	VRP4 5-0 = 111000	((146R - 112R) / 450R) * (VSPR - VGSP) + VGSP
	VRP4 5-0 = 111001	((146R - 114R) / 450R) * (VSPR - VGSP) + VGSP
	VRP4 5-0 = 111010	((146R - 116R) / 450R) * (VSPR - VGSP) + VGSP
	VRP4 5-0 = 111011	((146R - 118R) / 450R) * (VSPR - VGSP) + VGSP
	VRP4 5-0 = 111100	((146R - 120R) / 450R) * (VSPR - VGSP) + VGSP
	VRP4 5-0 = 111101	((146R - 122R) / 450R) * (VSPR - VGSP) + VGSP
	VRP4 5-0 = 111110	((146R - 124R) / 450R) * (VSPR - VGSP) + VGSP
	VRP4 5-0 = 111111	((146R - 126R) / 450R) * (VSPR - VGSP) + VGSP

Table 5.8 VinP 15

Himax Confidential
This information contained herein is the exclusive property of Himax and shall not be distributed, reproduced, or disclosed in whole or in part without prior written permission of Himax.

Reference Voltage	Macro Adjustment Value	VinP/N16 Formula
VinP16	VRP5 5-0 = 000000	(144R / 450R) * (VSPR - VGSP) + VGSP
	VRP5 5-0 = 000001	((144R - 2R) / 450R) * (VSPR - VGSP) + VGSP
	VRP5 5-0 = 000010	((144R - 4R) / 450R) * (VSPR - VGSP) + VGSP
	VRP5 5-0 = 000011	((144R - 6R) / 450R) * (VSPR - VGSP) + VGSP
	VRP5 5-0 = 000100	((144R - 8R) / 450R) * (VSPR - VGSP) + VGSP
	VRP5 5-0 = 000101	((144R - 10R) / 450R) * (VSPR - VGSP) + VGSP
	VRP5 5-0 = 000110	((144R - 12R) / 450R) * (VSPR - VGSP) + VGSP
	VRP5 5-0 = 000111	((144R - 14R) / 450R) * (VSPR - VGSP) + VGSP
	VRP5 5-0 = 001000	((144R - 16R) / 450R) * (VSPR - VGSP) + VGSP
	VRP5 5-0 = 001001	((144R - 18R) / 450R) * (VSPR - VGSP) + VGSP
	VRP5 5-0 = 001010	((144R - 20R) / 450R) * (VSPR - VGSP) + VGSP
	VRP5 5-0 = 001011	((144R - 22R) / 450R) * (VSPR - VGSP) + VGSP
	VRP5 5-0 = 001100	((144R - 24R) / 450R) * (VSPR - VGSP) + VGSP
	VRP5 5-0 = 001101	((144R - 26R) / 450R) * (VSPR - VGSP) + VGSP
	VRP5 5-0 = 001110	((144R - 28R) / 450R) * (VSPR - VGSP) + VGSP
	VRP5 5-0 = 001111	((144R - 30R) / 450R) * (VSPR - VGSP) + VGSP
	VRP5 5-0 = 010000	((144R - 32R) / 450R) * (VSPR - VGSP) + VGSP
	VRP5 5-0 = 010001	((144R - 34R) / 450R) * (VSPR - VGSP) + VGSP
	VRP5 5-0 = 010010	((144R - 36R) / 450R) * (VSPR - VGSP) + VGSP
	VRP5 5-0 = 010011	((144R - 38R) / 450R) * (VSPR - VGSP) + VGSP
	VRP5 5-0 = 010100	((144R - 40R) / 450R) * (VSPR - VGSP) + VGSP
	VRP5 5-0 = 010101	((144R - 42R) / 450R) * (VSPR - VGSP) + VGSP
	VRP5 5-0 = 010110	((144R - 44R) / 450R) * (VSPR - VGSP) + VGSP
	VRP5 5-0 = 010111	((144R - 46R) / 450R) * (VSPR - VGSP) + VGSP
	VRP5 5-0 = 011000	((144R - 48R) / 450R) * (VSPR - VGSP) + VGSP
	VRP5 5-0 = 011001	((144R - 50R) / 450R) * (VSPR - VGSP) + VGSP
	VRP5 5-0 = 011010	((144R - 52R) / 450R) * (VSPR - VGSP) + VGSP
	VRP5 5-0 = 011011	((144R - 54R) / 450R) * (VSPR - VGSP) + VGSP
	VRP5 5-0 = 011100	((144R - 56R) / 450R) * (VSPR - VGSP) + VGSP
	VRP5 5-0 = 011101	((144R - 58R) / 450R) * (VSPR - VGSP) + VGSP
	VRP5 5-0 = 011110	((144R - 60R) / 450R) * (VSPR - VGSP) + VGSP
	VRP5 5-0 = 011111	((144R - 62R) / 450R) * (VSPR - VGSP) + VGSP
	VRP5 5-0 = 100000	((144R - 64R) / 450R) * (VSPR - VGSP) + VGSP
	VRP5 5-0 = 100001	((144R - 66R) / 450R) * (VSPR - VGSP) + VGSP
	VRP5 5-0 = 100010	((144R - 68R) / 450R) * (VSPR - VGSP) + VGSP
	VRP5 5-0 = 100011	((144R - 70R) / 450R) * (VSPR - VGSP) + VGSP
	VRP5 5-0 = 100100	((144R - 72R) / 450R) * (VSPR - VGSP) + VGSP
	VRP5 5-0 = 100101	((144R - 74R) / 450R) * (VSPR - VGSP) + VGSP
	VRP5 5-0 = 100110	((144R - 76R) / 450R) * (VSPR - VGSP) + VGSP
	VRP5 5-0 = 100111	((144R - 78R) / 450R) * (VSPR - VGSP) + VGSP
	VRP5 5-0 = 101000	((144R - 80R) / 450R) * (VSPR - VGSP) + VGSP
	VRP5 5-0 = 101001	((144R - 82R) / 450R) * (VSPR - VGSP) + VGSP
	VRP5 5-0 = 101010	((144R - 84R) / 450R) * (VSPR - VGSP) + VGSP
	VRP5 5-0 = 101011	((144R - 86R) / 450R) * (VSPR - VGSP) + VGSP
	VRP5 5-0 = 101100	((144R - 88R) / 450R) * (VSPR - VGSP) + VGSP
	VRP5 5-0 = 101101	((144R - 90R) / 450R) * (VSPR - VGSP) + VGSP
	VRP5 5-0 = 101110	((144R - 92R) / 450R) * (VSPR - VGSP) + VGSP
	VRP5 5-0 = 101111	((144R - 94R) / 450R) * (VSPR - VGSP) + VGSP
	VRP5 5-0 = 110000	((144R - 96R) / 450R) * (VSPR - VGSP) + VGSP
	VRP5 5-0 = 110001	((144R - 98R) / 450R) * (VSPR - VGSP) + VGSP
	VRP5 5-0 = 110010	((144R - 100R) / 450R) * (VSPR - VGSP) + VGSP
	VRP5 5-0 = 110011	((144R - 102R) / 450R) * (VSPR - VGSP) + VGSP
	VRP5 5-0 = 110100	((144R - 104R) / 450R) * (VSPR - VGSP) + VGSP
	VRP5 5-0 = 110101	((144R - 106R) / 450R) * (VSPR - VGSP) + VGSP
	VRP5 5-0 = 110110	((144R - 108R) / 450R) * (VSPR - VGSP) + VGSP
	VRP5 5-0 = 110111	((144R - 110R) / 450R) * (VSPR - VGSP) + VGSP
	VRP5 5-0 = 111000	((144R - 112R) / 450R) * (VSPR - VGSP) + VGSP
	VRP5 5-0 = 111001	((144R - 114R) / 450R) * (VSPR - VGSP) + VGSP
	VRP5 5-0 = 111010	((144R - 116R) / 450R) * (VSPR - VGSP) + VGSP
	VRP5 5-0 = 111011	((144R - 118R) / 450R) * (VSPR - VGSP) + VGSP
	VRP5 5-0 = 111100	((144R - 120R) / 450R) * (VSPR - VGSP) + VGSP
	VRP5 5-0 = 111101	((144R - 122R) / 450R) * (VSPR - VGSP) + VGSP
	VRP5 5-0 = 111110	((144R - 124R) / 450R) * (VSPR - VGSP) + VGSP
	VRP5 5-0 = 111111	VGSP

Table 5.9 VinP 16

Himax Confidential
This information contained herein is the exclusive property of Himax and shall not be distributed, reproduced, or disclosed in whole or in part without prior written permission of Himax.

Reference Voltage	Macro Adjustment Value	VinP/N5 Formula
VinP5	PRP0 6-0 = 0000000	(350R / 450R) (VSPR - VGSP) + VGSP
	PRP0 6-0 = 0000001	((350R - 2R) / 450R) * (VSPR - VGSP) + VGSP
	PRP0 6-0 = 0000010	((350R - 4R) / 450R) * (VSPR - VGSP) + VGSP
	PRP0 6-0 = 0000011	((350R – 6R) / 450R) * (VSPR - VGSP) + VGSP
	PRP0 6-0 = 0000100	((350R – 8R) / 450R) * (VSPR - VGSP) + VGSP
	PRP0 6-0 = 0000101	((350R – 10R) / 450R) * (VSPR - VGSP) + VGSP
	PRP0 6-0 = 0000110	((350R – 12R) / 450R) * (VSPR - VGSP) + VGSP
	PRP0 6-0 = 0000111	((350R - 14R) / 450R) * (VSPR - VGSP) + VGSP
	PRP0 6-0 = 0001000	((350R – 16R) / 450R) * (VSPR - VGSP) + VGSP
	PRP0 6-0 = 0001001	((350R – 18R) / 450R) * (VSPR - VGSP) + VGSP
	PRP0 6-0 = 0001010	((350R – 20R) / 450R) * (VSPR - VGSP) + VGSP
	PRP0 6-0 = 0001011	((350R – 22R) / 450R) * (VSPR - VGSP) + VGSP
	PRP0 6-0 = 0001100	((350R – 24R) / 450R) * (VSPR - VGSP) + VGSP
	PRP0 6-0 = 0001101	((350R – 26R) / 450R) * (VSPR - VGSP) + VGSP
	PRP0 6-0 = 0001110	((350R – 28R) / 450R) * (VSPR - VGSP) + VGSP
	PRP0 6-0 = 0001111	((350R – 30R) / 450R) * (VSPR - VGSP) + VGSP
	PRP0 6-0 = 0010000	((350R – 32R) / 450R) * (VSPR - VGSP) + VGSP
	PRP0 6-0 = 0010001	((350R - 34R) / 450R) * (VSPR - VGSP) + VGSP
	PRP0 6-0 = 0010010	((350R – 36R) / 450R) * (VSPR - VGSP) + VGSP
	PRP0 6-0 = 0010011	((350R – 38R) / 450R) * (VSPR - VGSP) + VGSP
	PRP0 6-0 = 0010100	((350R – 40R) / 450R) * (VSPR - VGSP) + VGSP
	PRP0 6-0 = 0010101	((350R – 42R) / 450R) * (VSPR - VGSP) + VGSP
	PRP0 6-0 = 0010110	((350R – 44R) / 450R) * (VSPR - VGSP) + VGSP
	PRP0 6-0 = 0010111	((350R – 46R) / 450R) * (VSPR - VGSP) + VGSP
	PRP0 6-0 = 0011000	((350R – 48R) / 450R) * (VSPR - VGSP) + VGSP
	PRP0 6-0 = 0011001	((350R – 50R) / 450R) * (VSPR - VGSP) + VGSP
	PRP0 6-0 = 0011010	((350R – 52R) / 450R) * (VSPR - VGSP) + VGSP
	PRP0 6-0 = 0011011	((350R - 54R) / 450R) * (VSPR - VGSP) + VGSP
	PRP0 6-0 = 0011100	((350R – 56R) / 450R) * (VSPR - VGSP) + VGSP
	PRP0 6-0 = 0011101	((350R – 58R) / 450R) * (VSPR - VGSP) + VGSP
	PRP0 6-0 = 0011110	((350R – 60R) / 450R) * (VSPR - VGSP) + VGSP
	PRP0 6-0 = 0011111	((350R – 62R) / 450R) * (VSPR - VGSP) + VGSP
	PRP0 6-0 = 0100000	((350R - 64R) / 450R) * (VSPR - VGSP) + VGSP
	PRP0 6-0 = 0100001	((350R – 66R) / 450R) * (VSPR - VGSP) + VGSP
	PRP0 6-0 = 0100010	((350R – 68R) / 450R) * (VSPR - VGSP) + VGSP
	PRP0 6-0 = 0100011	((350R – 70R) / 450R) * (VSPR - VGSP) + VGSP
	PRP0 6-0 = 0100100	((350R – 72R) / 450R) * (VSPR - VGSP) + VGSP
	PRP0 6-0 = 0100101	((350R – 74R) / 450R) * (VSPR - VGSP) + VGSP
	PRP0 6-0 = 0100110	((350R – 76R) / 450R) * (VSPR - VGSP) + VGSP
	PRP0 6-0 = 0100111	((350R – 78R) / 450R) * (VSPR - VGSP) + VGSP
	PRP0 6-0 = 0101000	((350R – 80R) / 450R) * (VSPR - VGSP) + VGSP
	PRP0 6-0 = 0101001	((350R – 82R) / 450R) * (VSPR - VGSP) + VGSP
	PRP0 6-0 = 0101010	((350R - 84R) / 450R) * (VSPR - VGSP) + VGSP
	PRP0 6-0 = 0101011	((350R – 86R) / 450R) * (VSPR - VGSP) + VGSP
	PRP0 6-0 = 0101100	((350R – 88R) / 450R) * (VSPR - VGSP) + VGSP
	PRP0 6-0 = 0101101	((350R – 90R) / 450R) * (VSPR - VGSP) + VGSP
	PRP0 6-0 = 0101110	((350R – 92R) / 450R) * (VSPR - VGSP) + VGSP
	PRP0 6-0 = 0101111	((350R – 94R) / 450R) * (VSPR - VGSP) + VGSP
	PRP0 6-0 = 0110000	((350R – 96R) / 450R) * (VSPR - VGSP) + VGSP
	PRP0 6-0 = 0110001	((350R – 98R) / 450R) * (VSPR - VGSP) + VGSP
	PRP0 6-0 = 0110010	((350R – 100R) / 450R) * (VSPR - VGSP) + VGSP
	PRP0 6-0 = 0110011	((350R – 102R) / 450R) * (VSPR - VGSP) + VGSP
	PRP0 6-0 = 0110100	((350R – 104R) / 450R) * (VSPR - VGSP) + VGSP
	PRP0 6-0 = 0110101	((350R – 106R) / 450R) * (VSPR - VGSP) + VGSP
	PRP0 6-0 = 0110110	((350R – 108R) / 450R) * (VSPR - VGSP) + VGSP
	PRP0 6-0 = 0110111	((350R – 110R) / 450R) * (VSPR - VGSP) + VGSP
	PRP0 6-0 = 0111000	((350R – 112R) / 450R) * (VSPR - VGSP) + VGSP
	PRP0 6-0 = 0111001	((350R – 114R) / 450R) * (VSPR - VGSP) + VGSP
	PRP0 6-0 = 0111010	((350R – 116R) / 450R) * (VSPR - VGSP) + VGSP
	PRP0 6-0 = 0111011	((350R – 118R) / 450R) * (VSPR - VGSP) + VGSP
	PRP0 6-0 = 0111100	((350R – 120R) / 450R) * (VSPR - VGSP) + VGSP
	PRP0 6-0 = 0111101	((350R – 122R) / 450R) * (VSPR - VGSP) + VGSP
	PRP0 6-0 = 0111110	((350R - 124R) / 450R) * (VSPR - VGSP) + VGSP
	PRP0 6-0 = 0111111	((350R – 126R) / 450R) * (VSPR - VGSP) + VGSP
	PRP0 6-0 = 1000000	((350R – 128R) / 450R) * (VSPR - VGSP) + VGSP
	PRP0 6-0 = 1000001	((350R – 130R) / 450R) * (VSPR - VGSP) + VGSP
	PRP0 6-0 = 1000010	((350R - 132R) / 450R) * (VSPR - VGSP) + VGSP
	PRP0 6-0 = 1000011	((350R – 134R) / 450R) * (VSPR - VGSP) + VGSP
	PRP0 6-0 = 1000100	((350R – 136R) / 450R) * (VSPR - VGSP) + VGSP

Himax Confidential
Do Not Copy

	PRP0 6-0 = 1000101	((350R – 138R) / 450R) * (VSPR - VGSP) + VGSP
	PRP0 6-0 = 1000110	((350R – 140R) / 450R) * (VSPR - VGSP) + VGSP
	PRP0 6-0 = 1000111	((350R – 142R) / 450R) * (VSPR - VGSP) + VGSP
	PRP0 6-0 = 1001000	((350R – 144R) / 450R) * (VSPR - VGSP) + VGSP
	PRP0 6-0 = 1001001	((350R – 146R) / 450R) * (VSPR - VGSP) + VGSP
	PRP0 6-0 = 1001010	((350R – 148R) / 450R) * (VSPR - VGSP) + VGSP
	PRP0 6-0 = 1001011	((350R – 150R) / 450R) * (VSPR - VGSP) + VGSP
	PRP0 6-0 = 1001100	((350R - 152R) / 450R) * (VSPR - VGSP) + VGSP
	PRP0 6-0 = 1001101	((350R – 154R) / 450R) * (VSPR - VGSP) + VGSP
	PRP0 6-0 = 1001110	((350R – 156R) / 450R) * (VSPR - VGSP) + VGSP
	PRP0 6-0 = 1001111	((350R – 158R) / 450R) * (VSPR - VGSP) + VGSP
	PRP0 6-0 = 1010000	((350R – 160R) / 450R) * (VSPR - VGSP) + VGSP
	PRP0 6-0 = 1010001	((350R – 162R) / 450R) * (VSPR - VGSP) + VGSP
	PRP0 6-0 = 1010010	((350R – 164R) / 450R) * (VSPR - VGSP) + VGSP
	PRP0 6-0 = 1010011	((350R – 166R) / 450R) * (VSPR - VGSP) + VGSP
	PRP0 6-0 = 1010100	((350R – 168R) / 450R) * (VSPR - VGSP) + VGSP
	PRP0 6-0 = 1010101	((350R – 170R) / 450R) * (VSPR - VGSP) + VGSP
	PRP0 6-0 = 1010110	((350R – 172R) / 450R) * (VSPR - VGSP) + VGSP
	PRP0 6-0 = 1010111	((350R - 174R) / 450R) * (VSPR - VGSP) + VGSP
	PRP0 6-0 = 1011000	-
	PRP0 6-0 = 1011001	-
	PRP0 6-0 = 1011010	-
	PRP0 6-0 = 1011011	-
	PRP0 6-0 = 1011100	-
	PRP0 6-0 = 1011101	-
	PRP0 6-0 = 1011110	-
	PRP0 6-0 = 1011111	-
	PRP0 6-0 = 1100000	-
	PRP0 6-0 = 1100001	-
	PRP0 6-0 = 1100010	-
	PRP0 6-0 = 1100011	-
	PRP0 6-0 = 1100100	-
	PRP0 6-0 = 1100101	-
	PRP0 6-0 = 1100110	-
	PRP0 6-0 = 1100111	-
	PRP0 6-0 = 1101000	-
	PRP0 6-0 = 1101001	-
	PRP0 6-0 = 1101010	-
	PRP0 6-0 = 1101011	-
	PRP0 6-0 = 1101100	-
	PRP0 6-0 = 1101101	-
	PRP0 6-0 = 1101110	-
	PRP0 6-0 = 1101111	-
	PRP0 6-0 = 1110000	-
	PRP0 6-0 = 1110001	-
	PRP0 6-0 = 1110010	-
	PRP0 6-0 = 1110011	-
	PRP0 6-0 = 1110100	-
	PRP0 6-0 = 1110101	-
	PRP0 6-0 = 1110110	-
	PRP0 6-0 = 1110111	-
	PRP0 6-0 = 1111000	-
	PRP0 6-0 = 1111001	-
	PRP0 6-0 = 1111010	-
	PRP0 6-0 = 1111011	-
	PRP0 6-0 = 1111100	-
	PRP0 6-0 = 1111101	-
	PRP0 6-0 = 1111110	-
	PRP0 6-0 = 1111111	-

Table 5.10 VinP5

Himax Confidential
Do Not Copy

Reference Voltage	Macro Adjustment Value	VinP/N11 Formula
VinP11	PRP1 6-0 = 0000000	(274R / 450R) (VSPR - VGSP) + VGSP
	PRP1 6-0 = 0000001	((274R - 2R) / 450R) * (VSPR - VGSP) + VGSP
	PRP1 6-0 = 0000010	((274R - 4R) / 450R) * (VSPR - VGSP) + VGSP
	PRP1 6-0 = 0000011	((274R – 6R) / 450R) * (VSPR - VGSP) + VGSP
	PRP1 6-0 = 0000100	((274R – 8R) / 450R) * (VSPR - VGSP) + VGSP
	PRP1 6-0 = 0000101	((274R – 10R) / 450R) * (VSPR - VGSP) + VGSP
	PRP1 6-0 = 0000110	((274R – 12R) / 450R) * (VSPR - VGSP) + VGSP
	PRP1 6-0 = 0000111	((274R - 14R) / 450R) * (VSPR - VGSP) + VGSP
	PRP1 6-0 = 0001000	((274R – 16R) / 450R) * (VSPR - VGSP) + VGSP
	PRP1 6-0 = 0001001	((274R – 18R) / 450R) * (VSPR - VGSP) + VGSP
	PRP1 6-0 = 0001010	((274R – 20R) / 450R) * (VSPR - VGSP) + VGSP
	PRP1 6-0 = 0001011	((274R – 22R) / 450R) * (VSPR - VGSP) + VGSP
	PRP1 6-0 = 0001100	((274R – 24R) / 450R) * (VSPR - VGSP) + VGSP
	PRP1 6-0 = 0001101	((274R – 26R) / 450R) * (VSPR - VGSP) + VGSP
	PRP1 6-0 = 0001110	((274R – 28R) / 450R) * (VSPR - VGSP) + VGSP
	PRP1 6-0 = 0001111	((274R – 30R) / 450R) * (VSPR - VGSP) + VGSP
	PRP1 6-0 = 0010000	((274R – 32R) / 450R) * (VSPR - VGSP) + VGSP
	PRP1 6-0 = 0010001	((274R - 34R) / 450R) * (VSPR - VGSP) + VGSP
	PRP1 6-0 = 0010010	((274R – 36R) / 450R) * (VSPR - VGSP) + VGSP
	PRP1 6-0 = 0010011	((274R – 38R) / 450R) * (VSPR - VGSP) + VGSP
	PRP1 6-0 = 0010100	((274R – 40R) / 450R) * (VSPR - VGSP) + VGSP
	PRP1 6-0 = 0010101	((274R – 42R) / 450R) * (VSPR - VGSP) + VGSP
	PRP1 6-0 = 0010110	((274R – 44R) / 450R) * (VSPR - VGSP) + VGSP
	PRP1 6-0 = 0010111	((274R – 46R) / 450R) * (VSPR - VGSP) + VGSP
	PRP1 6-0 = 0011000	((274R – 48R) / 450R) * (VSPR - VGSP) + VGSP
	PRP1 6-0 = 0011001	((274R – 50R) / 450R) * (VSPR - VGSP) + VGSP
	PRP1 6-0 = 0011010	((274R – 52R) / 450R) * (VSPR - VGSP) + VGSP
	PRP1 6-0 = 0011011	((274R - 54R) / 450R) * (VSPR - VGSP) + VGSP
	PRP1 6-0 = 0011100	((274R – 56R) / 450R) * (VSPR - VGSP) + VGSP
	PRP1 6-0 = 0011101	((274R – 58R) / 450R) * (VSPR - VGSP) + VGSP
	PRP1 6-0 = 0011110	((274R – 60R) / 450R) * (VSPR - VGSP) + VGSP
	PRP1 6-0 = 0011111	((274R – 62R) / 450R) * (VSPR - VGSP) + VGSP
	PRP1 6-0 = 0100000	((274R - 64R) / 450R) * (VSPR - VGSP) + VGSP
	PRP1 6-0 = 0100001	((274R – 66R) / 450R) * (VSPR - VGSP) + VGSP
	PRP1 6-0 = 0100010	((274R – 68R) / 450R) * (VSPR - VGSP) + VGSP
	PRP1 6-0 = 0100011	((274R – 70R) / 450R) * (VSPR - VGSP) + VGSP
	PRP1 6-0 = 0100100	((274R – 72R) / 450R) * (VSPR - VGSP) + VGSP
	PRP1 6-0 = 0100101	((274R – 74R) / 450R) * (VSPR - VGSP) + VGSP
	PRP1 6-0 = 0100110	((274R – 76R) / 450R) * (VSPR - VGSP) + VGSP
	PRP1 6-0 = 0100111	((274R – 78R) / 450R) * (VSPR - VGSP) + VGSP
	PRP1 6-0 = 0101000	((274R – 80R) / 450R) * (VSPR - VGSP) + VGSP
	PRP1 6-0 = 0101001	((274R – 82R) / 450R) * (VSPR - VGSP) + VGSP
	PRP1 6-0 = 0101010	((274R - 84R) / 450R) * (VSPR - VGSP) + VGSP
	PRP1 6-0 = 0101011	((274R – 86R) / 450R) * (VSPR - VGSP) + VGSP
	PRP1 6-0 = 0101100	((274R – 88R) / 450R) * (VSPR - VGSP) + VGSP
	PRP1 6-0 = 0101101	((274R – 90R) / 450R) * (VSPR - VGSP) + VGSP
	PRP1 6-0 = 0101110	((274R – 92R) / 450R) * (VSPR - VGSP) + VGSP
	PRP1 6-0 = 0101111	((274R – 94R) / 450R) * (VSPR - VGSP) + VGSP
	PRP1 6-0 = 0110000	((274R – 96R) / 450R) * (VSPR - VGSP) + VGSP
	PRP1 6-0 = 0110001	((274R – 98R) / 450R) * (VSPR - VGSP) + VGSP
	PRP1 6-0 = 0110010	((274R – 100R) / 450R) * (VSPR - VGSP) + VGSP
	PRP1 6-0 = 0110011	((274R – 102R) / 450R) * (VSPR - VGSP) + VGSP
	PRP1 6-0 = 0110100	((274R – 104R) / 450R) * (VSPR - VGSP) + VGSP
	PRP1 6-0 = 0110101	((274R – 106R) / 450R) * (VSPR - VGSP) + VGSP
	PRP1 6-0 = 0110110	((274R – 108R) / 450R) * (VSPR - VGSP) + VGSP
	PRP1 6-0 = 0110111	((274R – 110R) / 450R) * (VSPR - VGSP) + VGSP
	PRP1 6-0 = 0111000	((274R – 112R) / 450R) * (VSPR - VGSP) + VGSP
	PRP1 6-0 = 0111001	((274R – 114R) / 450R) * (VSPR - VGSP) + VGSP
	PRP1 6-0 = 0111010	((274R – 116R) / 450R) * (VSPR - VGSP) + VGSP
	PRP1 6-0 = 0111011	((274R – 118R) / 450R) * (VSPR - VGSP) + VGSP
	PRP1 6-0 = 0111100	((274R – 120R) / 450R) * (VSPR - VGSP) + VGSP
	PRP1 6-0 = 0111101	((274R – 122R) / 450R) * (VSPR - VGSP) + VGSP
	PRP1 6-0 = 0111110	((274R - 124R) / 450R) * (VSPR - VGSP) + VGSP
	PRP1 6-0 = 0111111	((274R – 126R) / 450R) * (VSPR - VGSP) + VGSP
	PRP1 6-0 = 1000000	((274R – 128R) / 450R) * (VSPR - VGSP) + VGSP
	PRP1 6-0 = 1000001	((274R – 130R) / 450R) * (VSPR - VGSP) + VGSP
	PRP1 6-0 = 1000010	((274R - 132R) / 450R) * (VSPR - VGSP) + VGSP
	PRP1 6-0 = 1000011	((274R – 134R) / 450R) * (VSPR - VGSP) + VGSP
	PRP1 6-0 = 1000100	((274R – 136R) / 450R) * (VSPR - VGSP) + VGSP

Himax Confidential
Do Not Copy

	PRP1 6-0 = 1000101	((274R – 138R) / 450R) * (VSPR - VGSP) + VGSP
	PRP1 6-0 = 1000110	((274R – 140R) / 450R) * (VSPR - VGSP) + VGSP
	PRP1 6-0 = 1000111	((274R – 142R) / 450R) * (VSPR - VGSP) + VGSP
	PRP1 6-0 = 1001000	((274R – 144R) / 450R) * (VSPR - VGSP) + VGSP
	PRP1 6-0 = 1001001	((274R – 146R) / 450R) * (VSPR - VGSP) + VGSP
	PRP1 6-0 = 1001010	((274R – 148R) / 450R) * (VSPR - VGSP) + VGSP
	PRP1 6-0 = 1001011	((274R – 150R) / 450R) * (VSPR - VGSP) + VGSP
	PRP1 6-0 = 1001100	((274R - 152R) / 450R) * (VSPR - VGSP) + VGSP
	PRP1 6-0 = 1001101	((274R – 154R) / 450R) * (VSPR - VGSP) + VGSP
	PRP1 6-0 = 1001110	((274R – 156R) / 450R) * (VSPR - VGSP) + VGSP
	PRP1 6-0 = 1001111	((274R – 158R) / 450R) * (VSPR - VGSP) + VGSP
	PRP1 6-0 = 1010000	((274R – 160R) / 450R) * (VSPR - VGSP) + VGSP
	PRP1 6-0 = 1010001	((274R – 162R) / 450R) * (VSPR - VGSP) + VGSP
	PRP1 6-0 = 1010010	((274R – 164R) / 450R) * (VSPR - VGSP) + VGSP
	PRP1 6-0 = 1010011	((274R – 166R) / 450R) * (VSPR - VGSP) + VGSP
	PRP1 6-0 = 1010100	((274R – 168R) / 450R) * (VSPR - VGSP) + VGSP
	PRP1 6-0 = 1010101	((274R – 170R) / 450R) * (VSPR - VGSP) + VGSP
	PRP1 6-0 = 1010110	((274R – 172R) / 450R) * (VSPR - VGSP) + VGSP
	PRP1 6-0 = 1010111	((274R - 174R) / 450R) * (VSPR - VGSP) + VGSP
	PRP1 6-0 = 1011000	-
	PRP1 6-0 = 1011001	-
	PRP1 6-0 = 1011010	-
	PRP1 6-0 = 1011011	-
	PRP1 6-0 = 1011100	-
	PRP1 6-0 = 1011101	-
	PRP1 6-0 = 1011110	-
	PRP1 6-0 = 1011111	-
	PRP1 6-0 = 1100000	-
	PRP1 6-0 = 1100001	-
	PRP1 6-0 = 1100010	-
	PRP1 6-0 = 1100011	-
	PRP1 6-0 = 1100100	-
	PRP1 6-0 = 1100101	-
	PRP1 6-0 = 1100110	-
	PRP1 6-0 = 1100111	-
	PRP1 6-0 = 1101000	-
	PRP1 6-0 = 1101001	-
	PRP1 6-0 = 1101010	-
	PRP1 6-0 = 1101011	-
	PRP1 6-0 = 1101100	-
	PRP1 6-0 = 1101101	-
	PRP1 6-0 = 1101110	-
	PRP1 6-0 = 1101111	-
	PRP1 6-0 = 1110000	-
	PRP1 6-0 = 1110001	-
	PRP1 6-0 = 1110010	-
	PRP1 6-0 = 1110011	-
	PRP1 6-0 = 1110100	-
	PRP1 6-0 = 1110101	-
	PRP1 6-0 = 1110110	-
	PRP1 6-0 = 1110111	-
	PRP1 6-0 = 1111000	-
	PRP1 6-0 = 1111001	-
	PRP1 6-0 = 1111010	-
	PRP1 6-0 = 1111011	-
	PRP1 6-0 = 1111100	-
	PRP1 6-0 = 1111101	-
	PRP1 6-0 = 1111110	-
	PRP1 6-0 = 1111111	-

Table 5.11 VinP 11

Himax Confidential
Do Not Copy

Reference Voltage	Macro Adjustment Value	VinP/N3 Formula
VinP3	PKP0 4-0 = 00000	(47R / 48R) * (VinP2 - VinP5) + VinP5
	PKP0 4-0 = 00001	((47R – 1R) / 48R) * (VinP2 - VinP5) + VinP5
	PKP0 4-0 = 00010	((47R – 2R) / 48R) * (VinP2 - VinP5) + VinP5
	PKP0 4-0 = 00011	((47R – 3R) / 48R) * (VinP2 - VinP5) + VinP5
	PKP0 4-0 = 00100	((47R – 4R) / 48R) * (VinP2 - VinP5) + VinP5
	PKP0 4-0 = 00101	((47R – 5R) / 48R) * (VinP2 - VinP5) + VinP5
	PKP0 4-0 = 00110	((47R – 6R) / 48R) * (VinP2 - VinP5) + VinP5
	PKP0 4-0 = 00111	((47R – 7R) / 48R) * (VinP2 - VinP5) + VinP5
	PKP0 4-0 = 01000	((47R – 8R) / 48R) * (VinP2 - VinP5) + VinP5
	PKP0 4-0 = 01001	((47R – 9R) / 48R) * (VinP2 - VinP5) + VinP5
	PKP0 4-0 = 01010	((47R - 10R) / 48R) * (VinP2 - VinP5) + VinP5
	PKP0 4-0 = 01011	((47R - 11R) / 48R) * (VinP2 - VinP5) + VinP5
	PKP0 4-0 = 01100	((47R - 12R) / 48R) * (VinP2 - VinP5) + VinP5
	PKP0 4-0 = 01101	((47R - 13R) / 48R) * (VinP2 - VinP5) + VinP5
	PKP0 4-0 = 01110	((47R - 14R) / 48R) * (VinP2 - VinP5) + VinP5
	PKP0 4-0 = 01111	((47R - 15R) / 48R) * (VinP2 - VinP5) + VinP5
	PKP0 4-0 = 10000	((47R - 16R) / 48R) * (VinP2 - VinP5) + VinP5
	PKP0 4-0 = 10001	((47R - 17R) / 48R) * (VinP2 - VinP5) + VinP5
	PKP0 4-0 = 10010	((47R - 18R) / 48R) * (VinP2 - VinP5) + VinP5
	PKP0 4-0 = 10011	((47R - 19R) / 48R) * (VinP2 - VinP5) + VinP5
	PKP0 4-0 = 10100	((47R - 20R) / 48R) * (VinP2 - VinP5) + VinP5
	PKP0 4-0 = 10101	((47R - 21R) / 48R) * (VinP2 - VinP5) + VinP5
	PKP0 4-0 = 10110	((47R - 22R) / 48R) * (VinP2 - VinP5) + VinP5
	PKP0 4-0 = 10111	((47R - 23R) / 48R) * (VinP2 - VinP5) + VinP5
	PKP0 4-0 = 11000	((47R - 24R) / 48R) * (VinP2 - VinP5) + VinP5
	PKP0 4-0 = 11001	((47R - 25R) / 48R) * (VinP2 - VinP5) + VinP5
	PKP0 4-0 = 11010	((47R - 26R) / 48R) * (VinP2 - VinP5) + VinP5
	PKP0 4-0 = 11011	((47R - 27R) / 48R) * (VinP2 - VinP5) + VinP5
	PKP0 4-0 = 11100	((47R - 28R) / 48R) * (VinP2 - VinP5) + VinP5
	PKP0 4-0 = 11101	((47R - 29R) / 48R) * (VinP2 - VinP5) + VinP5
	PKP0 4-0 = 11110	((47R - 30R) / 48R) * (VinP2 - VinP5) + VinP5
	PKP0 4-0 = 11111	((47R - 31R) / 48R) * (VinP2 - VinP5) + VinP5

Table 5.12 VinP 3

Himax Confidential
Do Not Copy

This information contained herein is the exclusive property of Himax and shall not be distributed, reproduced, or disclosed in whole or in part without prior written permission of Himax.

Reference Voltage	Macro Adjustment Value	VinP4 Formula
VinP4	PKP1 4-0 = 00000	(32R / 48R) * (VinP2 - VinP5) + VinP5
	PKP1 4-0 = 00001	((32R - 1R) / 48R) * (VinP2 - VinP5) + VinP5
	PKP1 4-0 = 00010	((32R - 2R) / 48R) * (VinP2 - VinP5) + VinP5
	PKP1 4-0 = 00011	((32R - 3R) / 48R) * (VinP2 - VinP5) + VinP5
	PKP1 4-0 = 00100	((32R - 4R) / 48R) * (VinP2 - VinP5) + VinP5
	PKP1 4-0 = 00101	((32R - 5R) / 48R) * (VinP2 - VinP5) + VinP5
	PKP1 4-0 = 00110	((32R - 6R) / 48R) * (VinP2 - VinP5) + VinP5
	PKP1 4-0 = 00111	((32R - 7R) / 48R) * (VinP2 - VinP5) + VinP5
	PKP1 4-0 = 01000	((32R - 8R) / 48R) * (VinP2 - VinP5) + VinP5
	PKP1 4-0 = 01001	((32R - 9R) / 48R) * (VinP2 - VinP5) + VinP5
	PKP1 4-0 = 01010	((32R - 10R) / 48R) * (VinP2 - VinP5) + VinP5
	PKP1 4-0 = 01011	((32R - 11R) / 48R) * (VinP2 - VinP5) + VinP5
	PKP1 4-0 = 01100	((32R - 12R) / 48R) * (VinP2 - VinP5) + VinP5
	PKP1 4-0 = 01101	((32R - 13R) / 48R) * (VinP2 - VinP5) + VinP5
	PKP1 4-0 = 01110	((32R - 14R) / 48R) * (VinP2 - VinP5) + VinP5
	PKP1 4-0 = 01111	((32R - 15R) / 48R) * (VinP2 - VinP5) + VinP5
	PKP1 4-0 = 10000	((32R - 16R) / 48R) * (VinP2 - VinP5) + VinP5
	PKP1 4-0 = 10001	((32R - 17R) / 48R) * (VinP2 - VinP5) + VinP5
	PKP1 4-0 = 10010	((32R - 18R) / 48R) * (VinP2 - VinP5) + VinP5
	PKP1 4-0 = 10011	((32R - 19R) / 48R) * (VinP2 - VinP5) + VinP5
	PKP1 4-0 = 10100	((32R - 20R) / 48R) * (VinP2 - VinP5) + VinP5
	PKP1 4-0 = 10101	((32R - 21R) / 48R) * (VinP2 - VinP5) + VinP5
	PKP1 4-0 = 10110	((32R - 22R) / 48R) * (VinP2 - VinP5) + VinP5
	PKP1 4-0 = 10111	((32R - 23R) / 48R) * (VinP2 - VinP5) + VinP5
	PKP1 4-0 = 11000	((32R - 24R) / 48R) * (VinP2 - VinP5) + VinP5
	PKP1 4-0 = 11001	((32R - 25R) / 48R) * (VinP2 - VinP5) + VinP5
	PKP1 4-0 = 11010	((32R - 26R) / 48R) * (VinP2 - VinP5) + VinP5
	PKP1 4-0 = 11011	((32R - 27R) / 48R) * (VinP2 - VinP5) + VinP5
	PKP1 4-0 = 11100	((32R - 28R) / 48R) * (VinP2 - VinP5) + VinP5
	PKP1 4-0 = 11101	((32R - 29R) / 48R) * (VinP2 - VinP5) + VinP5
	PKP1 4-0 = 11110	((32R - 30R) / 48R) * (VinP2 - VinP5) + VinP5
	PKP1 4-0 = 11111	((32R - 31R) / 48R) * (VinP2 - VinP5) + VinP5

Table 5.13 VinP 4

Reference Voltage	Macro Adjustment Value	VinP6 Formula
VinP6	PKP2 4-0 = 00000	(220R / 223R) * (VinP5 - VinP11) + VinP11
	PKP2 4-0 = 00001	((220R - 3R) / 223R) * (VinP5 - VinP11) + VinP11
	PKP2 4-0 = 00010	((220R - 6R) / 223R) * (VinP5 - VinP11) + VinP11
	PKP2 4-0 = 00011	((220R - 9R) / 223R) * (VinP5 - VinP11) + VinP11
	PKP2 4-0 = 00100	((220R - 12R) / 223R) * (VinP5 - VinP11) + VinP11
	PKP2 4-0 = 00101	((220R - 15R) / 223R) * (VinP5 - VinP11) + VinP11
	PKP2 4-0 = 00110	((220R - 18R) / 223R) * (VinP5 - VinP11) + VinP11
	PKP2 4-0 = 00111	((220R - 21R) / 223R) * (VinP5 - VinP11) + VinP11
	PKP2 4-0 = 01000	((220R - 24R) / 223R) * (VinP5 - VinP11) + VinP11
	PKP2 4-0 = 01001	((220R - 27R) / 223R) * (VinP5 - VinP11) + VinP11
	PKP2 4-0 = 01010	((220R - 30R) / 223R) * (VinP5 - VinP11) + VinP11
	PKP2 4-0 = 01011	((220R - 33R) / 223R) * (VinP5 - VinP11) + VinP11
	PKP2 4-0 = 01100	((220R - 36R) / 223R) * (VinP5 - VinP11) + VinP11
	PKP2 4-0 = 01101	((220R - 39R) / 223R) * (VinP5 - VinP11) + VinP11
	PKP2 4-0 = 01110	((220R - 42R) / 223R) * (VinP5 - VinP11) + VinP11
	PKP2 4-0 = 01111	((220R - 45R) / 223R) * (VinP5 - VinP11) + VinP11
	PKP2 4-0 = 10000	((220R - 48R) / 223R) * (VinP5 - VinP11) + VinP11
	PKP2 4-0 = 10001	((220R - 51R) / 223R) * (VinP5 - VinP11) + VinP11
	PKP2 4-0 = 10010	((220R - 54R) / 223R) * (VinP5 - VinP11) + VinP11
	PKP2 4-0 = 10011	((220R - 57R) / 223R) * (VinP5 - VinP11) + VinP11
	PKP2 4-0 = 10100	((220R - 60R) / 223R) * (VinP5 - VinP11) + VinP11
	PKP2 4-0 = 10101	((220R - 63R) / 223R) * (VinP5 - VinP11) + VinP11
	PKP2 4-0 = 10110	((220R - 66R) / 223R) * (VinP5 - VinP11) + VinP11
	PKP2 4-0 = 10111	((220R - 69R) / 223R) * (VinP5 - VinP11) + VinP11
	PKP2 4-0 = 11000	((220R - 72R) / 223R) * (VinP5 - VinP11) + VinP11
	PKP2 4-0 = 11001	((220R - 75R) / 223R) * (VinP5 - VinP11) + VinP11
	PKP2 4-0 = 11010	((220R - 78R) / 223R) * (VinP5 - VinP11) + VinP11
	PKP2 4-0 = 11011	((220R - 81R) / 223R) * (VinP5 - VinP11) + VinP11
	PKP2 4-0 = 11100	((220R - 84R) / 223R) * (VinP5 - VinP11) + VinP11
	PKP2 4-0 = 11101	((220R - 87R) / 223R) * (VinP5 - VinP11) + VinP11
	PKP2 4-0 = 11110	((220R - 90R) / 223R) * (VinP5 - VinP11) + VinP11
	PKP2 4-0 = 11111	((220R - 93R) / 223R) * (VinP5 - VinP11) + VinP11

Table 5.14 VinP 6

Himax Confidential
Do Not Copy

Reference Voltage	Macro Adjustment Value	VinP7 Formula
VinP7	PKP3 4-0 = 00000	(193R / 223R) * (VinP5 - VinP11) + VinP11
	PKP3 4-0 = 00001	((193R - 3R) / 223R) * (VinP5 - VinP11) + VinP11
	PKP3 4-0 = 00010	((193R - 6R) / 223R) * (VinP5 - VinP11) + VinP11
	PKP3 4-0 = 00011	((193R - 9R) / 223R) * (VinP5 - VinP11) + VinP11
	PKP3 4-0 = 00100	((193R - 12R) / 223R) * (VinP5 - VinP11) + VinP11
	PKP3 4-0 = 00101	((193R - 15R) / 223R) * (VinP5 - VinP11) + VinP11
	PKP3 4-0 = 00110	((193R - 18R) / 223R) * (VinP5 - VinP11) + VinP11
	PKP3 4-0 = 00111	((193R - 21R) / 223R) * (VinP5 - VinP11) + VinP11
	PKP3 4-0 = 01000	((193R - 24R) / 223R) * (VinP5 - VinP11) + VinP11
	PKP3 4-0 = 01001	((193R - 27R) / 223R) * (VinP5 - VinP11) + VinP11
	PKP3 4-0 = 01010	((193R - 30R) / 223R) * (VinP5 - VinP11) + VinP11
	PKP3 4-0 = 01011	((193R - 33R) / 223R) * (VinP5 - VinP11) + VinP11
	PKP3 4-0 = 01100	((193R - 36R) / 223R) * (VinP5 - VinP11) + VinP11
	PKP3 4-0 = 01101	((193R - 39R) / 223R) * (VinP5 - VinP11) + VinP11
	PKP3 4-0 = 01110	((193R - 42R) / 223R) * (VinP5 - VinP11) + VinP11
	PKP3 4-0 = 01111	((193R - 45R) / 223R) * (VinP5 - VinP11) + VinP11
	PKP3 4-0 = 10000	((193R - 48R) / 223R) * (VinP5 - VinP11) + VinP11
	PKP3 4-0 = 10001	((193R - 51R) / 223R) * (VinP5 - VinP11) + VinP11
	PKP3 4-0 = 10010	((193R - 54R) / 223R) * (VinP5 - VinP11) + VinP11
	PKP3 4-0 = 10011	((193R - 57R) / 223R) * (VinP5 - VinP11) + VinP11
	PKP3 4-0 = 10100	((193R - 60R) / 223R) * (VinP5 - VinP11) + VinP11
	PKP3 4-0 = 10101	((193R - 63R) / 223R) * (VinP5 - VinP11) + VinP11
	PKP3 4-0 = 10110	((193R - 66R) / 223R) * (VinP5 - VinP11) + VinP11
	PKP3 4-0 = 10111	((193R - 69R) / 223R) * (VinP5 - VinP11) + VinP11
	PKP3 4-0 = 11000	((193R - 72R) / 223R) * (VinP5 - VinP11) + VinP11
	PKP3 4-0 = 11001	((193R - 75R) / 223R) * (VinP5 - VinP11) + VinP11
	PKP3 4-0 = 11010	((193R - 78R) / 223R) * (VinP5 - VinP11) + VinP11
	PKP3 4-0 = 11011	((193R - 81R) / 223R) * (VinP5 - VinP11) + VinP11
	PKP3 4-0 = 11100	((193R - 84R) / 223R) * (VinP5 - VinP11) + VinP11
	PKP3 4-0 = 11101	((193R - 87R) / 223R) * (VinP5 - VinP11) + VinP11
	PKP3 4-0 = 11110	((193R - 90R) / 223R) * (VinP5 - VinP11) + VinP11
	PKP3 4-0 = 11111	((193R - 93R) / 223R) * (VinP5 - VinP11) + VinP11

Table 5.15 VinP 7

Reference Voltage	Macro Adjustment Value	VinP8 Formula
VinP8	PKP4 4-0 = 00000	(158R / 223R) * (VinP5 - VinP11) + VinP11
	PKP4 4-0 = 00001	((158R - 3R) / 223R) * (VinP5 - VinP11) + VinP11
	PKP4 4-0 = 00010	((158R - 6R) / 223R) * (VinP5 - VinP11) + VinP11
	PKP4 4-0 = 00011	((158R - 9R) / 223R) * (VinP5 - VinP11) + VinP11
	PKP4 4-0 = 00100	((158R - 12R) / 223R) * (VinP5 - VinP11) + VinP11
	PKP4 4-0 = 00101	((158R - 15R) / 223R) * (VinP5 - VinP11) + VinP11
	PKP4 4-0 = 00110	((158R - 18R) / 223R) * (VinP5 - VinP11) + VinP11
	PKP4 4-0 = 00111	((158R - 21R) / 223R) * (VinP5 - VinP11) + VinP11
	PKP4 4-0 = 01000	((158R - 24R) / 223R) * (VinP5 - VinP11) + VinP11
	PKP4 4-0 = 01001	((158R - 27R) / 223R) * (VinP5 - VinP11) + VinP11
	PKP4 4-0 = 01010	((158R - 30R) / 223R) * (VinP5 - VinP11) + VinP11
	PKP4 4-0 = 01011	((158R - 33R) / 223R) * (VinP5 - VinP11) + VinP11
	PKP4 4-0 = 01100	((158R - 36R) / 223R) * (VinP5 - VinP11) + VinP11
	PKP4 4-0 = 01101	((158R - 39R) / 223R) * (VinP5 - VinP11) + VinP11
	PKP4 4-0 = 01110	((158R - 42R) / 223R) * (VinP5 - VinP11) + VinP11
	PKP4 4-0 = 01111	((158R - 45R) / 223R) * (VinP5 - VinP11) + VinP11
	PKP4 4-0 = 10000	((158R - 48R) / 223R) * (VinP5 - VinP11) + VinP11
	PKP4 4-0 = 10001	((158R - 51R) / 223R) * (VinP5 - VinP11) + VinP11
	PKP4 4-0 = 10010	((158R - 54R) / 223R) * (VinP5 - VinP11) + VinP11
	PKP4 4-0 = 10011	((158R - 57R) / 223R) * (VinP5 - VinP11) + VinP11
	PKP4 4-0 = 10100	((158R - 60R) / 223R) * (VinP5 - VinP11) + VinP11
	PKP4 4-0 = 10101	((158R - 63R) / 223R) * (VinP5 - VinP11) + VinP11
	PKP4 4-0 = 10110	((158R - 66R) / 223R) * (VinP5 - VinP11) + VinP11
	PKP4 4-0 = 10111	((158R - 69R) / 223R) * (VinP5 - VinP11) + VinP11
	PKP4 4-0 = 11000	((158R - 72R) / 223R) * (VinP5 - VinP11) + VinP11
	PKP4 4-0 = 11001	((158R - 75R) / 223R) * (VinP5 - VinP11) + VinP11
	PKP4 4-0 = 11010	((158R - 78R) / 223R) * (VinP5 - VinP11) + VinP11
	PKP4 4-0 = 11011	((158R - 81R) / 223R) * (VinP5 - VinP11) + VinP11
	PKP4 4-0 = 11100	((158R - 84R) / 223R) * (VinP5 - VinP11) + VinP11
	PKP4 4-0 = 11101	((158R - 87R) / 223R) * (VinP5 - VinP11) + VinP11
	PKP4 4-0 = 11110	((158R - 90R) / 223R) * (VinP5 - VinP11) + VinP11
	PKP4 4-0 = 11111	((158R - 93R) / 223R) * (VinP5 - VinP11) + VinP11

Table 5.16 VinP 8

Himax Confidential
Do Not Copy

Reference Voltage	Macro Adjustment Value	VinP9 Formula
VinP9	PKP5 4-0 = 00000	(123R / 223R) * (VinP5 - VinP11) + VinP11
	PKP5 4-0 = 00001	((123R - 3R) / 223R) * (VinP5 - VinP11) + VinP11
	PKP5 4-0 = 00010	((123R - 6R) / 223R) * (VinP5 - VinP11) + VinP11
	PKP5 4-0 = 00011	((123R - 9R) / 223R) * (VinP5 - VinP11) + VinP11
	PKP5 4-0 = 00100	((123R - 12R) / 223R) * (VinP5 - VinP11) + VinP11
	PKP5 4-0 = 00101	((123R - 15R) / 223R) * (VinP5 - VinP11) + VinP11
	PKP5 4-0 = 00110	((123R - 18R) / 223R) * (VinP5 - VinP11) + VinP11
	PKP5 4-0 = 00111	((123R - 21R) / 223R) * (VinP5 - VinP11) + VinP11
	PKP5 4-0 = 01000	((123R - 24R) / 223R) * (VinP5 - VinP11) + VinP11
	PKP5 4-0 = 01001	((123R - 27R) / 223R) * (VinP5 - VinP11) + VinP11
	PKP5 4-0 = 01010	((123R - 30R) / 223R) * (VinP5 - VinP11) + VinP11
	PKP5 4-0 = 01011	((123R - 33R) / 223R) * (VinP5 - VinP11) + VinP11
	PKP5 4-0 = 01100	((123R - 36R) / 223R) * (VinP5 - VinP11) + VinP11
	PKP5 4-0 = 01101	((123R - 39R) / 223R) * (VinP5 - VinP11) + VinP11
	PKP5 4-0 = 01110	((123R - 42R) / 223R) * (VinP5 - VinP11) + VinP11
	PKP5 4-0 = 01111	((123R - 45R) / 223R) * (VinP5 - VinP11) + VinP11
	PKP5 4-0 = 10000	((123R - 48R) / 223R) * (VinP5 - VinP11) + VinP11
	PKP5 4-0 = 10001	((123R - 51R) / 223R) * (VinP5 - VinP11) + VinP11
	PKP5 4-0 = 10010	((123R - 54R) / 223R) * (VinP5 - VinP11) + VinP11
	PKP5 4-0 = 10011	((123R - 57R) / 223R) * (VinP5 - VinP11) + VinP11
	PKP5 4-0 = 10100	((123R - 60R) / 223R) * (VinP5 - VinP11) + VinP11
	PKP5 4-0 = 10101	((123R - 63R) / 223R) * (VinP5 - VinP11) + VinP11
	PKP5 4-0 = 10110	((123R - 66R) / 223R) * (VinP5 - VinP11) + VinP11
	PKP5 4-0 = 10111	((123R - 69R) / 223R) * (VinP5 - VinP11) + VinP11
	PKP5 4-0 = 11000	((123R - 72R) / 223R) * (VinP5 - VinP11) + VinP11
	PKP5 4-0 = 11001	((123R - 75R) / 223R) * (VinP5 - VinP11) + VinP11
	PKP5 4-0 = 11010	((123R - 78R) / 223R) * (VinP5 - VinP11) + VinP11
	PKP5 4-0 = 11011	((123R - 81R) / 223R) * (VinP5 - VinP11) + VinP11
	PKP5 4-0 = 11100	((123R - 84R) / 223R) * (VinP5 - VinP11) + VinP11
	PKP5 4-0 = 11101	((123R - 87R) / 223R) * (VinP5 - VinP11) + VinP11
	PKP5 4-0 = 11110	((123R - 90R) / 223R) * (VinP5 - VinP11) + VinP11
	PKP5 4-0 = 11111	((123R - 93R) / 223R) * (VinP5 - VinP11) + VinP11

Table 5.17 VinP 9

Reference Voltage	Macro Adjustment Value	VinP10 Formula
VinP10	PKP6 4-0 = 00000	(96R / 223R) * (VinP5 - VinP11) + VinP11
	PKP6 4-0 = 00001	((96R - 3R) / 223R) * (VinP5 - VinP11) + VinP11
	PKP6 4-0 = 00010	((96R - 6R) / 223R) * (VinP5 - VinP11) + VinP11
	PKP6 4-0 = 00011	((96R - 9R) / 223R) * (VinP5 - VinP11) + VinP11
	PKP6 4-0 = 00100	((96R - 12R) / 223R) * (VinP5 - VinP11) + VinP11
	PKP6 4-0 = 00101	((96R - 15R) / 223R) * (VinP5 - VinP11) + VinP11
	PKP6 4-0 = 00110	((96R - 18R) / 223R) * (VinP5 - VinP11) + VinP11
	PKP6 4-0 = 00111	((96R - 21R) / 223R) * (VinP5 - VinP11) + VinP11
	PKP6 4-0 = 01000	((96R - 24R) / 223R) * (VinP5 - VinP11) + VinP11
	PKP6 4-0 = 01001	((96R - 27R) / 223R) * (VinP5 - VinP11) + VinP11
	PKP6 4-0 = 01010	((96R - 30R) / 223R) * (VinP5 - VinP11) + VinP11
	PKP6 4-0 = 01011	((96R - 33R) / 223R) * (VinP5 - VinP11) + VinP11
	PKP6 4-0 = 01100	((96R - 36R) / 223R) * (VinP5 - VinP11) + VinP11
	PKP6 4-0 = 01101	((96R - 39R) / 223R) * (VinP5 - VinP11) + VinP11
	PKP6 4-0 = 01110	((96R - 42R) / 223R) * (VinP5 - VinP11) + VinP11
	PKP6 4-0 = 01111	((96R - 45R) / 223R) * (VinP5 - VinP11) + VinP11
	PKP6 4-0 = 10000	((96R - 48R) / 223R) * (VinP5 - VinP11) + VinP11
	PKP6 4-0 = 10001	((96R - 51R) / 223R) * (VinP5 - VinP11) + VinP11
	PKP6 4-0 = 10010	((96R - 54R) / 223R) * (VinP5 - VinP11) + VinP11
	PKP6 4-0 = 10011	((96R - 57R) / 223R) * (VinP5 - VinP11) + VinP11
	PKP6 4-0 = 10100	((96R - 60R) / 223R) * (VinP5 - VinP11) + VinP11
	PKP6 4-0 = 10101	((96R - 63R) / 223R) * (VinP5 - VinP11) + VinP11
	PKP6 4-0 = 10110	((96R - 66R) / 223R) * (VinP5 - VinP11) + VinP11
	PKP6 4-0 = 10111	((96R - 69R) / 223R) * (VinP5 - VinP11) + VinP11
	PKP6 4-0 = 11000	((96R - 72R) / 223R) * (VinP5 - VinP11) + VinP11
	PKP6 4-0 = 11001	((96R - 75R) / 223R) * (VinP5 - VinP11) + VinP11
	PKP6 4-0 = 11010	((96R - 78R) / 223R) * (VinP5 - VinP11) + VinP11
	PKP6 4-0 = 11011	((96R - 81R) / 223R) * (VinP5 - VinP11) + VinP11
	PKP6 4-0 = 11100	((96R - 84R) / 223R) * (VinP5 - VinP11) + VinP11
	PKP6 4-0 = 11101	((96R - 87R) / 223R) * (VinP5 - VinP11) + VinP11
	PKP6 4-0 = 11110	((96R - 90R) / 223R) * (VinP5 - VinP11) + VinP11
	PKP6 4-0 = 11111	((96R - 93R) / 223R) * (VinP5 - VinP11) + VinP11

Table 5.18 VinP 10

Himax Confidential
Do Not Copy

Reference Voltage	Macro Adjustment Value	VinP12 Formula
VinP12	PKP7 4-0 = 00000	(47R / 48R) * (VinP11 - VinP14) + VinP14
	PKP7 4-0 = 00001	((47R - 1R) / 48R) * (VinP11 - VinP14) + VinP14
	PKP7 4-0 = 00010	((47R - 2R) / 48R) * (VinP11 - VinP14) + VinP14
	PKP7 4-0 = 00011	((47R - 3R) / 48R) * (VinP11 - VinP14) + VinP14
	PKP7 4-0 = 00100	((47R - 4R) / 48R) * (VinP11 - VinP14) + VinP14
	PKP7 4-0 = 00101	((47R - 5R) / 48R) * (VinP11 - VinP14) + VinP14
	PKP7 4-0 = 00110	((47R - 6R) / 48R) * (VinP11 - VinP14) + VinP14
	PKP7 4-0 = 00111	((47R - 7R) / 48R) * (VinP11 - VinP14) + VinP14
	PKP7 4-0 = 01000	((47R - 8R) / 48R) * (VinP11 - VinP14) + VinP14
	PKP7 4-0 = 01001	((47R - 9R) / 48R) * (VinP11 - VinP14) + VinP14
	PKP7 4-0 = 01010	((47R - 10R) / 48R) * (VinP11 - VinP14) + VinP14
	PKP7 4-0 = 01011	((47R - 11R) / 48R) * (VinP11 - VinP14) + VinP14
	PKP7 4-0 = 01100	((47R - 12R) / 48R) * (VinP11 - VinP14) + VinP14
	PKP7 4-0 = 01101	((47R - 13R) / 48R) * (VinP11 - VinP14) + VinP14
	PKP7 4-0 = 01110	((47R - 14R) / 48R) * (VinP11 - VinP14) + VinP14
	PKP7 4-0 = 01111	((47R - 15R) / 48R) * (VinP11 - VinP14) + VinP14
	PKP7 4-0 = 10000	((47R - 16R) / 48R) * (VinP11 - VinP14) + VinP14
	PKP7 4-0 = 10001	((47R - 17R) / 48R) * (VinP11 - VinP14) + VinP14
	PKP7 4-0 = 10010	((47R - 18R) / 48R) * (VinP11 - VinP14) + VinP14
	PKP7 4-0 = 10011	((47R - 19R) / 48R) * (VinP11 - VinP14) + VinP14
	PKP7 4-0 = 10100	((47R - 20R) / 48R) * (VinP11 - VinP14) + VinP14
	PKP7 4-0 = 10101	((47R - 21R) / 48R) * (VinP11 - VinP14) + VinP14
	PKP7 4-0 = 10110	((47R - 22R) / 48R) * (VinP11 - VinP14) + VinP14
	PKP7 4-0 = 10111	((47R - 23R) / 48R) * (VinP11 - VinP14) + VinP14
	PKP7 4-0 = 11000	((47R - 24R) / 48R) * (VinP11 - VinP14) + VinP14
	PKP7 4-0 = 11001	((47R - 25R) / 48R) * (VinP11 - VinP14) + VinP14
	PKP7 4-0 = 11010	((47R - 26R) / 48R) * (VinP11 - VinP14) + VinP14
	PKP7 4-0 = 11011	((47R - 27R) / 48R) * (VinP11 - VinP14) + VinP14
	PKP7 4-0 = 11100	((47R - 28R) / 48R) * (VinP11 - VinP14) + VinP14
	PKP7 4-0 = 11101	((47R - 29R) / 48R) * (VinP11 - VinP14) + VinP14
	PKP7 4-0 = 11110	((47R - 30R) / 48R) * (VinP11 - VinP14) + VinP14
	PKP7 4-0 = 11111	((47R - 31R) / 48R) * (VinP11 - VinP14) + VinP14

Table 5.19 VinP 12

Reference Voltage	Macro Adjustment Value	VinP13 Formula
VinP13	PKP8 4-0 = 00000	(32R / 48R) * (VinP11 - VinP14) + VinP14
	PKP8 4-0 = 00001	((32R - 1R) / 48R) * (VinP11 - VinP14) + VinP14
	PKP8 4-0 = 00010	((32R - 2R) / 48R) * (VinP11 - VinP14) + VinP14
	PKP8 4-0 = 00011	((32R - 3R) / 48R) * (VinP11 - VinP14) + VinP14
	PKP8 4-0 = 00100	((32R - 4R) / 48R) * (VinP11 - VinP14) + VinP14
	PKP8 4-0 = 00101	((32R - 5R) / 48R) * (VinP11 - VinP14) + VinP14
	PKP8 4-0 = 00110	((32R - 6R) / 48R) * (VinP11 - VinP14) + VinP14
	PKP8 4-0 = 00111	((32R - 7R) / 48R) * (VinP11 - VinP14) + VinP14
	PKP8 4-0 = 01000	((32R - 8R) / 48R) * (VinP11 - VinP14) + VinP14
	PKP8 4-0 = 01001	((32R - 9R) / 48R) * (VinP11 - VinP14) + VinP14
	PKP8 4-0 = 01010	((32R - 10R) / 48R) * (VinP11 - VinP14) + VinP14
	PKP8 4-0 = 01011	((32R - 11R) / 48R) * (VinP11 - VinP14) + VinP14
	PKP8 4-0 = 01100	((32R - 12R) / 48R) * (VinP11 - VinP14) + VinP14
	PKP8 4-0 = 01101	((32R - 13R) / 48R) * (VinP11 - VinP14) + VinP14
	PKP8 4-0 = 01110	((32R - 14R) / 48R) * (VinP11 - VinP14) + VinP14
	PKP8 4-0 = 01111	((32R - 15R) / 48R) * (VinP11 - VinP14) + VinP14
	PKP8 4-0 = 10000	((32R - 16R) / 48R) * (VinP11 - VinP14) + VinP14
	PKP8 4-0 = 10001	((32R - 17R) / 48R) * (VinP11 - VinP14) + VinP14
	PKP8 4-0 = 10010	((32R - 18R) / 48R) * (VinP11 - VinP14) + VinP14
	PKP8 4-0 = 10011	((32R - 19R) / 48R) * (VinP11 - VinP14) + VinP14
	PKP8 4-0 = 10100	((32R - 20R) / 48R) * (VinP11 - VinP14) + VinP14
	PKP8 4-0 = 10101	((32R - 21R) / 48R) * (VinP11 - VinP14) + VinP14
	PKP8 4-0 = 10110	((32R - 22R) / 48R) * (VinP11 - VinP14) + VinP14
	PKP8 4-0 = 10111	((32R - 23R) / 48R) * (VinP11 - VinP14) + VinP14
	PKP8 4-0 = 11000	((32R - 24R) / 48R) * (VinP11 - VinP14) + VinP14
	PKP8 4-0 = 11001	((32R - 25R) / 48R) * (VinP11 - VinP14) + VinP14
	PKP8 4-0 = 11010	((32R - 26R) / 48R) * (VinP11 - VinP14) + VinP14
	PKP8 4-0 = 11011	((32R - 27R) / 48R) * (VinP11 - VinP14) + VinP14
	PKP8 4-0 = 11100	((32R - 28R) / 48R) * (VinP11 - VinP14) + VinP14
	PKP8 4-0 = 11101	((32R - 29R) / 48R) * (VinP11 - VinP14) + VinP14
	PKP8 4-0 = 11110	((32R - 30R) / 48R) * (VinP11 - VinP14) + VinP14
	PKP8 4-0 = 11111	((32R - 31R) / 48R) * (VinP11 - VinP14) + VinP14

Table 5.20 VinP 13

Himax Confidential
Do Not Copy

Reference Voltage	Macro Adjustment Value	VinN0 Formula
VinN0	VRN0 5-0 = 000000	VSNR
	VRN0 5-0 = 000001	((450R - 20R) / 450R) * (VSNR - VGSN) + VGSN
	VRN0 5-0 = 000010	((450R - 22R) / 450R) * (VSNR - VGSN) + VGSN
	VRN0 5-0 = 000011	((450R - 24R) / 450R) * (VSNR - VGSN) + VGSN
	VRN0 5-0 = 000100	((450R - 26R) / 450R) * (VSNR - VGSN) + VGSN
	VRN0 5-0 = 000101	((450R - 28R) / 450R) * (VSNR - VGSN) + VGSN
	VRN0 5-0 = 000110	((450R - 30R) / 450R) * (VSNR - VGSN) + VGSN
	VRN0 5-0 = 000111	((450R - 32R) / 450R) * (VSNR - VGSN) + VGSN
	VRN0 5-0 = 001000	((450R - 34R) / 450R) * (VSNR - VGSN) + VGSN
	VRN0 5-0 = 001001	((450R - 36R) / 450R) * (VSNR - VGSN) + VGSN
	VRN0 5-0 = 001010	((450R - 38R) / 450R) * (VSNR - VGSN) + VGSN
	VRN0 5-0 = 001011	((450R - 40R) / 450R) * (VSNR - VGSN) + VGSN
	VRN0 5-0 = 001100	((450R - 42R) / 450R) * (VSNR - VGSN) + VGSN
	VRN0 5-0 = 001101	((450R - 44R) / 450R) * (VSNR - VGSN) + VGSN
	VRN0 5-0 = 001110	((450R - 46R) / 450R) * (VSNR - VGSN) + VGSN
	VRN0 5-0 = 001111	((450R - 48R) / 450R) * (VSNR - VGSN) + VGSN
	VRN0 5-0 = 010000	((450R - 50R) / 450R) * (VSNR - VGSN) + VGSN
	VRN0 5-0 = 010001	((450R - 52R) / 450R) * (VSNR - VGSN) + VGSN
	VRN0 5-0 = 010010	((450R - 54R) / 450R) * (VSNR - VGSN) + VGSN
	VRN0 5-0 = 010011	((450R - 56R) / 450R) * (VSNR - VGSN) + VGSN
	VRN0 5-0 = 010100	((450R - 58R) / 450R) * (VSNR - VGSN) + VGSN
	VRN0 5-0 = 010101	((450R - 60R) / 450R) * (VSNR - VGSN) + VGSN
	VRN0 5-0 = 010110	((450R - 62R) / 450R) * (VSNR - VGSN) + VGSN
	VRN0 5-0 = 010111	((450R - 64R) / 450R) * (VSNR - VGSN) + VGSN
	VRN0 5-0 = 011000	((450R - 66R) / 450R) * (VSNR - VGSN) + VGSN
	VRN0 5-0 = 011001	((450R - 68R) / 450R) * (VSNR - VGSN) + VGSN
	VRN0 5-0 = 011010	((450R - 70R) / 450R) * (VSNR - VGSN) + VGSN
	VRN0 5-0 = 011011	((450R - 72R) / 450R) * (VSNR - VGSN) + VGSN
	VRN0 5-0 = 011100	((450R - 74R) / 450R) * (VSNR - VGSN) + VGSN
	VRN0 5-0 = 011101	((450R - 76R) / 450R) * (VSNR - VGSN) + VGSN
	VRN0 5-0 = 011110	((450R - 78R) / 450R) * (VSNR - VGSN) + VGSN
	VRN0 5-0 = 011111	((450R - 80R) / 450R) * (VSNR - VGSN) + VGSN
	VRN0 5-0 = 100000	((450R - 82R) / 450R) * (VSNR - VGSN) + VGSN
	VRN0 5-0 = 100001	((450R - 84R) / 450R) * (VSNR - VGSN) + VGSN
	VRN0 5-0 = 100010	((450R - 86R) / 450R) * (VSNR - VGSN) + VGSN
	VRN0 5-0 = 100011	((450R - 88R) / 450R) * (VSNR - VGSN) + VGSN
	VRN0 5-0 = 100100	((450R - 90R) / 450R) * (VSNR - VGSN) + VGSN
	VRN0 5-0 = 100101	((450R - 92R) / 450R) * (VSNR - VGSN) + VGSN
	VRN0 5-0 = 100110	((450R - 94R) / 450R) * (VSNR - VGSN) + VGSN
	VRN0 5-0 = 100111	((450R - 96R) / 450R) * (VSNR - VGSN) + VGSN
	VRN0 5-0 = 101000	((450R - 98R) / 450R) * (VSNR - VGSN) + VGSN
	VRN0 5-0 = 101001	((450R - 100R) / 450R) * (VSNR - VGSN) + VGSN
	VRN0 5-0 = 101010	((450R - 102R) / 450R) * (VSNR - VGSN) + VGSN
	VRN0 5-0 = 101011	((450R - 104R) / 450R) * (VSNR - VGSN) + VGSN
	VRN0 5-0 = 101100	((450R - 106R) / 450R) * (VSNR - VGSN) + VGSN
	VRN0 5-0 = 101101	((450R - 108R) / 450R) * (VSNR - VGSN) + VGSN
	VRN0 5-0 = 101110	((450R - 110R) / 450R) * (VSNR - VGSN) + VGSN
	VRN0 5-0 = 101111	((450R - 112R) / 450R) * (VSNR - VGSN) + VGSN
	VRN0 5-0 = 110000	((450R - 114R) / 450R) * (VSNR - VGSN) + VGSN
	VRN0 5-0 = 110001	((450R - 116R) / 450R) * (VSNR - VGSN) + VGSN
	VRN0 5-0 = 110010	((450R - 118R) / 450R) * (VSNR - VGSN) + VGSN
	VRN0 5-0 = 110011	((450R - 120R) / 450R) * (VSNR - VGSN) + VGSN
	VRN0 5-0 = 110100	((450R - 122R) / 450R) * (VSNR - VGSN) + VGSN
	VRN0 5-0 = 110101	((450R - 124R) / 450R) * (VSNR - VGSN) + VGSN
	VRN0 5-0 = 110110	((450R - 126R) / 450R) * (VSNR - VGSN) + VGSN
	VRN0 5-0 = 110111	((450R - 128R) / 450R) * (VSNR - VGSN) + VGSN
	VRN0 5-0 = 111000	((450R - 130R) / 450R) * (VSNR - VGSN) + VGSN
	VRN0 5-0 = 111001	((450R - 132R) / 450R) * (VSNR - VGSN) + VGSN
	VRN0 5-0 = 111010	((450R - 134R) / 450R) * (VSNR - VGSN) + VGSN
	VRN0 5-0 = 111011	((450R - 136R) / 450R) * (VSNR - VGSN) + VGSN
	VRN0 5-0 = 111100	((450R - 138R) / 450R) * (VSNR - VGSN) + VGSN
	VRN0 5-0 = 111101	((450R - 140R) / 450R) * (VSNR - VGSN) + VGSN
	VRN0 5-0 = 111110	((450R - 142R) / 450R) * (VSNR - VGSN) + VGSN
	VRN0 5-0 = 111111	((450R - 144R) / 450R) * (VSNR - VGSN) + VGSN

Table 5.21 VinN 0

Himax Confidential
This information contained herein is the exclusive property of Himax and shall not be distributed, reproduced, or disclosed in whole or in part without prior written permission of Himax.

Reference Voltage	Macro Adjustment Value	VinN1 Formula
VinN1	VRN1 5-0 = 000000	(430R / 450R) * (VSNR - VGSN) + VGSN
	VRN1 5-0 = 000001	((430R - 2R) / 450R) * (VSNR - VGSN) + VGSN
	VRN1 5-0 = 000010	((430R - 4R) / 450R) * (VSNR - VGSN) + VGSN
	VRN1 5-0 = 000011	((430R - 6R) / 450R) * (VSNR - VGSN) + VGSN
	VRN1 5-0 = 000100	((430R - 8R) / 450R) * (VSNR - VGSN) + VGSN
	VRN1 5-0 = 000101	((430R - 10R) / 450R) * (VSNR - VGSN) + VGSN
	VRN1 5-0 = 000110	((430R - 12R) / 450R) * (VSNR - VGSN) + VGSN
	VRN1 5-0 = 000111	((430R - 14R) / 450R) * (VSNR - VGSN) + VGSN
	VRN1 5-0 = 001000	((430R - 16R) / 450R) * (VSNR - VGSN) + VGSN
	VRN1 5-0 = 001001	((430R - 18R) / 450R) * (VSNR - VGSN) + VGSN
	VRN1 5-0 = 001010	((430R - 20R) / 450R) * (VSNR - VGSN) + VGSN
	VRN1 5-0 = 001011	((430R - 22R) / 450R) * (VSNR - VGSN) + VGSN
	VRN1 5-0 = 001100	((430R - 24R) / 450R) * (VSNR - VGSN) + VGSN
	VRN1 5-0 = 001101	((430R - 26R) / 450R) * (VSNR - VGSN) + VGSN
	VRN1 5-0 = 001110	((430R - 28R) / 450R) * (VSNR - VGSN) + VGSN
	VRN1 5-0 = 001111	((430R - 30R) / 450R) * (VSNR - VGSN) + VGSN
	VRN1 5-0 = 010000	((430R - 32R) / 450R) * (VSNR - VGSN) + VGSN
	VRN1 5-0 = 010001	((430R - 34R) / 450R) * (VSNR - VGSN) + VGSN
	VRN1 5-0 = 010010	((430R - 36R) / 450R) * (VSNR - VGSN) + VGSN
	VRN1 5-0 = 010011	((430R - 38R) / 450R) * (VSNR - VGSN) + VGSN
	VRN1 5-0 = 010100	((430R - 40R) / 450R) * (VSNR - VGSN) + VGSN
	VRN1 5-0 = 010101	((430R - 42R) / 450R) * (VSNR - VGSN) + VGSN
	VRN1 5-0 = 010110	((430R - 44R) / 450R) * (VSNR - VGSN) + VGSN
	VRN1 5-0 = 010111	((430R - 46R) / 450R) * (VSNR - VGSN) + VGSN
	VRN1 5-0 = 011000	((430R - 48R) / 450R) * (VSNR - VGSN) + VGSN
	VRN1 5-0 = 011001	((430R - 50R) / 450R) * (VSNR - VGSN) + VGSN
	VRN1 5-0 = 011010	((430R - 52R) / 450R) * (VSNR - VGSN) + VGSN
	VRN1 5-0 = 011011	((430R - 54R) / 450R) * (VSNR - VGSN) + VGSN
	VRN1 5-0 = 011100	((430R - 56R) / 450R) * (VSNR - VGSN) + VGSN
	VRN1 5-0 = 011101	((430R - 58R) / 450R) * (VSNR - VGSN) + VGSN
	VRN1 5-0 = 011110	((430R - 60R) / 450R) * (VSNR - VGSN) + VGSN
	VRN1 5-0 = 011111	((430R - 62R) / 450R) * (VSNR - VGSN) + VGSN
	VRN1 5-0 = 100000	((430R - 64R) / 450R) * (VSNR - VGSN) + VGSN
	VRN1 5-0 = 100001	((430R - 66R) / 450R) * (VSNR - VGSN) + VGSN
	VRN1 5-0 = 100010	((430R - 68R) / 450R) * (VSNR - VGSN) + VGSN
	VRN1 5-0 = 100011	((430R - 70R) / 450R) * (VSNR - VGSN) + VGSN
	VRN1 5-0 = 100100	((430R - 72R) / 450R) * (VSNR - VGSN) + VGSN
	VRN1 5-0 = 100101	((430R - 74R) / 450R) * (VSNR - VGSN) + VGSN
	VRN1 5-0 = 100110	((430R - 76R) / 450R) * (VSNR - VGSN) + VGSN
	VRN1 5-0 = 100111	((430R - 78R) / 450R) * (VSNR - VGSN) + VGSN
	VRN1 5-0 = 101000	((430R - 80R) / 450R) * (VSNR - VGSN) + VGSN
	VRN1 5-0 = 101001	((430R - 82R) / 450R) * (VSNR - VGSN) + VGSN
	VRN1 5-0 = 101010	((430R - 84R) / 450R) * (VSNR - VGSN) + VGSN
	VRN1 5-0 = 101011	((430R - 86R) / 450R) * (VSNR - VGSN) + VGSN
	VRN1 5-0 = 101100	((430R - 88R) / 450R) * (VSNR - VGSN) + VGSN
	VRN1 5-0 = 101101	((430R - 90R) / 450R) * (VSNR - VGSN) + VGSN
	VRN1 5-0 = 101110	((430R - 92R) / 450R) * (VSNR - VGSN) + VGSN
	VRN1 5-0 = 101111	((430R - 94R) / 450R) * (VSNR - VGSN) + VGSN
	VRN1 5-0 = 110000	((430R - 96R) / 450R) * (VSNR - VGSN) + VGSN
	VRN1 5-0 = 110001	((430R - 98R) / 450R) * (VSNR - VGSN) + VGSN
	VRN1 5-0 = 110010	((430R - 100R) / 450R) * (VSNR - VGSN) + VGSN
	VRN1 5-0 = 110011	((430R - 102R) / 450R) * (VSNR - VGSN) + VGSN
	VRN1 5-0 = 110100	((430R - 104R) / 450R) * (VSNR - VGSN) + VGSN
	VRN1 5-0 = 110101	((430R - 106R) / 450R) * (VSNR - VGSN) + VGSN
	VRN1 5-0 = 110110	((430R - 108R) / 450R) * (VSNR - VGSN) + VGSN
	VRN1 5-0 = 110111	((430R - 110R) / 450R) * (VSNR - VGSN) + VGSN
	VRN1 5-0 = 111000	((430R - 112R) / 450R) * (VSNR - VGSN) + VGSN
	VRN1 5-0 = 111001	((430R - 114R) / 450R) * (VSNR - VGSN) + VGSN
	VRN1 5-0 = 111010	((430R - 116R) / 450R) * (VSNR - VGSN) + VGSN
	VRN1 5-0 = 111011	((430R - 118R) / 450R) * (VSNR - VGSN) + VGSN
	VRN1 5-0 = 111100	((430R - 120R) / 450R) * (VSNR - VGSN) + VGSN
	VRN1 5-0 = 111101	((430R - 122R) / 450R) * (VSNR - VGSN) + VGSN
	VRN1 5-0 = 111110	((430R - 124R) / 450R) * (VSNR - VGSN) + VGSN
	VRN1 5-0 = 111111	((430R - 126R) / 450R) * (VSNR - VGSN) + VGSN

Table 5.22 VinN 1

Himax Confidential
This information contained herein is the exclusive property of Himax and shall not be distributed, reproduced, or disclosed in whole or in part without prior written permission of Himax.

Reference Voltage	Macro Adjustment Value	VinN2 Formula
VinN2	VRN2 5-0 = 000000	(420R / 450R) * (VSNR - VGSN) + VGSN
	VRN2 5-0 = 000001	((420R - 2R) / 450R) * (VSNR - VGSN) + VGSN
	VRN2 5-0 = 000010	((420R - 4R) / 450R) * (VSNR - VGSN) + VGSN
	VRN2 5-0 = 000011	((420R - 6R) / 450R) * (VSNR - VGSN) + VGSN
	VRN2 5-0 = 000100	((420R - 8R) / 450R) * (VSNR - VGSN) + VGSN
	VRN2 5-0 = 000101	((420R - 10R) / 450R) * (VSNR - VGSN) + VGSN
	VRN2 5-0 = 000110	((420R - 12R) / 450R) * (VSNR - VGSN) + VGSN
	VRN2 5-0 = 000111	((420R - 14R) / 450R) * (VSNR - VGSN) + VGSN
	VRN2 5-0 = 001000	((420R - 16R) / 450R) * (VSNR - VGSN) + VGSN
	VRN2 5-0 = 001001	((420R - 18R) / 450R) * (VSNR - VGSN) + VGSN
	VRN2 5-0 = 001010	((420R - 20R) / 450R) * (VSNR - VGSN) + VGSN
	VRN2 5-0 = 001011	((420R - 22R) / 450R) * (VSNR - VGSN) + VGSN
	VRN2 5-0 = 001100	((420R - 24R) / 450R) * (VSNR - VGSN) + VGSN
	VRN2 5-0 = 001101	((420R - 26R) / 450R) * (VSNR - VGSN) + VGSN
	VRN2 5-0 = 001110	((420R - 28R) / 450R) * (VSNR - VGSN) + VGSN
	VRN2 5-0 = 001111	((420R - 30R) / 450R) * (VSNR - VGSN) + VGSN
	VRN2 5-0 = 010000	((420R - 32R) / 450R) * (VSNR - VGSN) + VGSN
	VRN2 5-0 = 010001	((420R - 34R) / 450R) * (VSNR - VGSN) + VGSN
	VRN2 5-0 = 010010	((420R - 36R) / 450R) * (VSNR - VGSN) + VGSN
	VRN2 5-0 = 010011	((420R - 38R) / 450R) * (VSNR - VGSN) + VGSN
	VRN2 5-0 = 010100	((420R - 40R) / 450R) * (VSNR - VGSN) + VGSN
	VRN2 5-0 = 010101	((420R - 42R) / 450R) * (VSNR - VGSN) + VGSN
	VRN2 5-0 = 010110	((420R - 44R) / 450R) * (VSNR - VGSN) + VGSN
	VRN2 5-0 = 010111	((420R - 46R) / 450R) * (VSNR - VGSN) + VGSN
	VRN2 5-0 = 011000	((420R - 48R) / 450R) * (VSNR - VGSN) + VGSN
	VRN2 5-0 = 011001	((420R - 50R) / 450R) * (VSNR - VGSN) + VGSN
	VRN2 5-0 = 011010	((420R - 52R) / 450R) * (VSNR - VGSN) + VGSN
	VRN2 5-0 = 011011	((420R - 54R) / 450R) * (VSNR - VGSN) + VGSN
	VRN2 5-0 = 011100	((420R - 56R) / 450R) * (VSNR - VGSN) + VGSN
	VRN2 5-0 = 011101	((420R - 58R) / 450R) * (VSNR - VGSN) + VGSN
	VRN2 5-0 = 011110	((420R - 60R) / 450R) * (VSNR - VGSN) + VGSN
	VRN2 5-0 = 011111	((420R - 62R) / 450R) * (VSNR - VGSN) + VGSN
	VRN2 5-0 = 100000	((420R - 64R) / 450R) * (VSNR - VGSN) + VGSN
	VRN2 5-0 = 100001	((420R - 66R) / 450R) * (VSNR - VGSN) + VGSN
	VRN2 5-0 = 100010	((420R - 68R) / 450R) * (VSNR - VGSN) + VGSN
	VRN2 5-0 = 100011	((420R - 70R) / 450R) * (VSNR - VGSN) + VGSN
	VRN2 5-0 = 100100	((420R - 72R) / 450R) * (VSNR - VGSN) + VGSN
	VRN2 5-0 = 100101	((420R - 74R) / 450R) * (VSNR - VGSN) + VGSN
	VRN2 5-0 = 100110	((420R - 76R) / 450R) * (VSNR - VGSN) + VGSN
	VRN2 5-0 = 100111	((420R - 78R) / 450R) * (VSNR - VGSN) + VGSN
	VRN2 5-0 = 101000	((420R - 80R) / 450R) * (VSNR - VGSN) + VGSN
	VRN2 5-0 = 101001	((420R - 82R) / 450R) * (VSNR - VGSN) + VGSN
	VRN2 5-0 = 101010	((420R - 84R) / 450R) * (VSNR - VGSN) + VGSN
	VRN2 5-0 = 101011	((420R - 86R) / 450R) * (VSNR - VGSN) + VGSN
	VRN2 5-0 = 101100	((420R - 88R) / 450R) * (VSNR - VGSN) + VGSN
	VRN2 5-0 = 101101	((420R - 90R) / 450R) * (VSNR - VGSN) + VGSN
	VRN2 5-0 = 101110	((420R - 92R) / 450R) * (VSNR - VGSN) + VGSN
	VRN2 5-0 = 101111	((420R - 94R) / 450R) * (VSNR - VGSN) + VGSN
	VRN2 5-0 = 110000	((420R - 96R) / 450R) * (VSNR - VGSN) + VGSN
	VRN2 5-0 = 110001	((420R - 98R) / 450R) * (VSNR - VGSN) + VGSN
	VRN2 5-0 = 110010	((420R - 100R) / 450R) * (VSNR - VGSN) + VGSN
	VRN2 5-0 = 110011	((420R - 102R) / 450R) * (VSNR - VGSN) + VGSN
	VRN2 5-0 = 110100	((420R - 104R) / 450R) * (VSNR - VGSN) + VGSN
	VRN2 5-0 = 110101	((420R - 106R) / 450R) * (VSNR - VGSN) + VGSN
	VRN2 5-0 = 110110	((420R - 108R) / 450R) * (VSNR - VGSN) + VGSN
	VRN2 5-0 = 110111	((420R - 110R) / 450R) * (VSNR - VGSN) + VGSN
	VRN2 5-0 = 111000	((420R - 112R) / 450R) * (VSNR - VGSN) + VGSN
	VRN2 5-0 = 111001	((420R - 114R) / 450R) * (VSNR - VGSN) + VGSN
	VRN2 5-0 = 111010	((420R - 116R) / 450R) * (VSNR - VGSN) + VGSN
	VRN2 5-0 = 111011	((420R - 118R) / 450R) * (VSNR - VGSN) + VGSN
	VRN2 5-0 = 111100	((420R - 120R) / 450R) * (VSNR - VGSN) + VGSN
	VRN2 5-0 = 111101	((420R - 122R) / 450R) * (VSNR - VGSN) + VGSN
	VRN2 5-0 = 111110	((420R - 124R) / 450R) * (VSNR - VGSN) + VGSN
	VRN2 5-0 = 111111	((420R - 126R) / 450R) * (VSNR - VGSN) + VGSN

Table 5.23 VinN 2

Himax Confidential
This information contained herein is the exclusive property of Himax and shall not be distributed, reproduced, or disclosed in whole or in part without prior written permission of Himax.

Reference Voltage	Macro Adjustment Value	VinN14 Formula
VinN14	VRN3 5-0 = 000000	(156R / 450R) * (VSNR - VGSN) + VGSN
	VRN3 5-0 = 000001	((156R - 2R) / 450R) * (VSNR - VGSN) + VGSN
	VRN3 5-0 = 000010	((156R - 4R) / 450R) * (VSNR - VGSN) + VGSN
	VRN3 5-0 = 000011	((156R - 6R) / 450R) * (VSNR - VGSN) + VGSN
	VRN3 5-0 = 000100	((156R - 8R) / 450R) * (VSNR - VGSN) + VGSN
	VRN3 5-0 = 000101	((156R - 10R) / 450R) * (VSNR - VGSN) + VGSN
	VRN3 5-0 = 000110	((156R - 12R) / 450R) * (VSNR - VGSN) + VGSN
	VRN3 5-0 = 000111	((156R - 14R) / 450R) * (VSNR - VGSN) + VGSN
	VRN3 5-0 = 001000	((156R - 16R) / 450R) * (VSNR - VGSN) + VGSN
	VRN3 5-0 = 001001	((156R - 18R) / 450R) * (VSNR - VGSN) + VGSN
	VRN3 5-0 = 001010	((156R - 20R) / 450R) * (VSNR - VGSN) + VGSN
	VRN3 5-0 = 001011	((156R - 22R) / 450R) * (VSNR - VGSN) + VGSN
	VRN3 5-0 = 001100	((156R - 24R) / 450R) * (VSNR - VGSN) + VGSN
	VRN3 5-0 = 001101	((156R - 26R) / 450R) * (VSNR - VGSN) + VGSN
	VRN3 5-0 = 001110	((156R - 28R) / 450R) * (VSNR - VGSN) + VGSN
	VRN3 5-0 = 001111	((156R - 30R) / 450R) * (VSNR - VGSN) + VGSN
	VRN3 5-0 = 010000	((156R - 32R) / 450R) * (VSNR - VGSN) + VGSN
	VRN3 5-0 = 010001	((156R - 34R) / 450R) * (VSNR - VGSN) + VGSN
	VRN3 5-0 = 010010	((156R - 36R) / 450R) * (VSNR - VGSN) + VGSN
	VRN3 5-0 = 010011	((156R - 38R) / 450R) * (VSNR - VGSN) + VGSN
	VRN3 5-0 = 010100	((156R - 40R) / 450R) * (VSNR - VGSN) + VGSN
	VRN3 5-0 = 010101	((156R - 42R) / 450R) * (VSNR - VGSN) + VGSN
	VRN3 5-0 = 010110	((156R - 44R) / 450R) * (VSNR - VGSN) + VGSN
	VRN3 5-0 = 010111	((156R - 46R) / 450R) * (VSNR - VGSN) + VGSN
	VRN3 5-0 = 011000	((156R - 48R) / 450R) * (VSNR - VGSN) + VGSN
	VRN3 5-0 = 011001	((156R - 50R) / 450R) * (VSNR - VGSN) + VGSN
	VRN3 5-0 = 011010	((156R - 52R) / 450R) * (VSNR - VGSN) + VGSN
	VRN3 5-0 = 011011	((156R - 54R) / 450R) * (VSNR - VGSN) + VGSN
	VRN3 5-0 = 011100	((156R - 56R) / 450R) * (VSNR - VGSN) + VGSN
	VRN3 5-0 = 011101	((156R - 58R) / 450R) * (VSNR - VGSN) + VGSN
	VRN3 5-0 = 011110	((156R - 60R) / 450R) * (VSNR - VGSN) + VGSN
	VRN3 5-0 = 011111	((156R - 62R) / 450R) * (VSNR - VGSN) + VGSN
	VRN3 5-0 = 100000	((156R - 64R) / 450R) * (VSNR - VGSN) + VGSN
	VRN3 5-0 = 100001	((156R - 66R) / 450R) * (VSNR - VGSN) + VGSN
	VRN3 5-0 = 100010	((156R - 68R) / 450R) * (VSNR - VGSN) + VGSN
	VRN3 5-0 = 100011	((156R - 70R) / 450R) * (VSNR - VGSN) + VGSN
	VRN3 5-0 = 100100	((156R - 72R) / 450R) * (VSNR - VGSN) + VGSN
	VRN3 5-0 = 100101	((156R - 74R) / 450R) * (VSNR - VGSN) + VGSN
	VRN3 5-0 = 100110	((156R - 76R) / 450R) * (VSNR - VGSN) + VGSN
	VRN3 5-0 = 100111	((156R - 78R) / 450R) * (VSNR - VGSN) + VGSN
	VRN3 5-0 = 101000	((156R - 80R) / 450R) * (VSNR - VGSN) + VGSN
	VRN3 5-0 = 101001	((156R - 82R) / 450R) * (VSNR - VGSN) + VGSN
	VRN3 5-0 = 101010	((156R - 84R) / 450R) * (VSNR - VGSN) + VGSN
	VRN3 5-0 = 101011	((156R - 86R) / 450R) * (VSNR - VGSN) + VGSN
	VRN3 5-0 = 101100	((156R - 88R) / 450R) * (VSNR - VGSN) + VGSN
	VRN3 5-0 = 101101	((156R - 90R) / 450R) * (VSNR - VGSN) + VGSN
	VRN3 5-0 = 101110	((156R - 92R) / 450R) * (VSNR - VGSN) + VGSN
	VRN3 5-0 = 101111	((156R - 94R) / 450R) * (VSNR - VGSN) + VGSN
	VRN3 5-0 = 110000	((156R - 96R) / 450R) * (VSNR - VGSN) + VGSN
	VRN3 5-0 = 110001	((156R - 98R) / 450R) * (VSNR - VGSN) + VGSN
	VRN3 5-0 = 110010	((156R - 100R) / 450R) * (VSNR - VGSN) + VGSN
	VRN3 5-0 = 110011	((156R - 102R) / 450R) * (VSNR - VGSN) + VGSN
	VRN3 5-0 = 110100	((156R - 104R) / 450R) * (VSNR - VGSN) + VGSN
	VRN3 5-0 = 110101	((156R - 106R) / 450R) * (VSNR - VGSN) + VGSN
	VRN3 5-0 = 110110	((156R - 108R) / 450R) * (VSNR - VGSN) + VGSN
	VRN3 5-0 = 110111	((156R - 110R) / 450R) * (VSNR - VGSN) + VGSN
	VRN3 5-0 = 111000	((156R - 112R) / 450R) * (VSNR - VGSN) + VGSN
	VRN3 5-0 = 111001	((156R - 114R) / 450R) * (VSNR - VGSN) + VGSN
	VRN3 5-0 = 111010	((156R - 116R) / 450R) * (VSNR - VGSN) + VGSN
	VRN3 5-0 = 111011	((156R - 118R) / 450R) * (VSNR - VGSN) + VGSN
	VRN3 5-0 = 111100	((156R - 120R) / 450R) * (VSNR - VGSN) + VGSN
	VRN3 5-0 = 111101	((156R - 122R) / 450R) * (VSNR - VGSN) + VGSN
	VRN3 5-0 = 111110	((156R - 124R) / 450R) * (VSNR - VGSN) + VGSN
	VRN3 5-0 = 111111	((156R - 126R) / 450R) * (VSNR - VGSN) + VGSN

Table 5.24 VinN 14

Himax Confidential
This information contained herein is the exclusive property of Himax and shall not be distributed, reproduced, or disclosed in whole or in part without prior written permission of Himax.

Reference Voltage	Macro Adjustment Value	VinN15Formula
VinN15	VRN4 5-0 = 000000	(146R / 450R) * (VSNR - VGSN) + VGSN
	VRN4 5-0 = 000001	((146R - 2R) / 450R) * (VSNR - VGSN) + VGSN
	VRN4 5-0 = 000010	((146R - 4R) / 450R) * (VSNR - VGSN) + VGSN
	VRN4 5-0 = 000011	((146R - 6R) / 450R) * (VSNR - VGSN) + VGSN
	VRN4 5-0 = 000100	((146R - 8R) / 450R) * (VSNR - VGSN) + VGSN
	VRN4 5-0 = 000101	((146R - 10R) / 450R) * (VSNR - VGSN) + VGSN
	VRN4 5-0 = 000110	((146R - 12R) / 450R) * (VSNR - VGSN) + VGSN
	VRN4 5-0 = 000111	((146R - 14R) / 450R) * (VSNR - VGSN) + VGSN
	VRN4 5-0 = 001000	((146R - 16R) / 450R) * (VSNR - VGSN) + VGSN
	VRN4 5-0 = 001001	((146R - 18R) / 450R) * (VSNR - VGSN) + VGSN
	VRN4 5-0 = 001010	((146R - 20R) / 450R) * (VSNR - VGSN) + VGSN
	VRN4 5-0 = 001011	((146R - 22R) / 450R) * (VSNR - VGSN) + VGSN
	VRN4 5-0 = 001100	((146R - 24R) / 450R) * (VSNR - VGSN) + VGSN
	VRN4 5-0 = 001101	((146R - 26R) / 450R) * (VSNR - VGSN) + VGSN
	VRN4 5-0 = 001110	((146R - 28R) / 450R) * (VSNR - VGSN) + VGSN
	VRN4 5-0 = 001111	((146R - 30R) / 450R) * (VSNR - VGSN) + VGSN
	VRN4 5-0 = 010000	((146R - 32R) / 450R) * (VSNR - VGSN) + VGSN
	VRN4 5-0 = 010001	((146R - 34R) / 450R) * (VSNR - VGSN) + VGSN
	VRN4 5-0 = 010010	((146R - 36R) / 450R) * (VSNR - VGSN) + VGSN
	VRN4 5-0 = 010011	((146R - 38R) / 450R) * (VSNR - VGSN) + VGSN
	VRN4 5-0 = 010100	((146R - 40R) / 450R) * (VSNR - VGSN) + VGSN
	VRN4 5-0 = 010101	((146R - 42R) / 450R) * (VSNR - VGSN) + VGSN
	VRN4 5-0 = 010110	((146R - 44R) / 450R) * (VSNR - VGSN) + VGSN
	VRN4 5-0 = 010111	((146R - 46R) / 450R) * (VSNR - VGSN) + VGSN
	VRN4 5-0 = 011000	((146R - 48R) / 450R) * (VSNR - VGSN) + VGSN
	VRN4 5-0 = 011001	((146R - 50R) / 450R) * (VSNR - VGSN) + VGSN
	VRN4 5-0 = 011010	((146R - 52R) / 450R) * (VSNR - VGSN) + VGSN
	VRN4 5-0 = 011011	((146R - 54R) / 450R) * (VSNR - VGSN) + VGSN
	VRN4 5-0 = 011100	((146R - 56R) / 450R) * (VSNR - VGSN) + VGSN
	VRN4 5-0 = 011101	((146R - 58R) / 450R) * (VSNR - VGSN) + VGSN
	VRN4 5-0 = 011110	((146R - 60R) / 450R) * (VSNR - VGSN) + VGSN
	VRN4 5-0 = 011111	((146R - 62R) / 450R) * (VSNR - VGSN) + VGSN
	VRN4 5-0 = 100000	((146R - 64R) / 450R) * (VSNR - VGSN) + VGSN
	VRN4 5-0 = 100001	((146R - 66R) / 450R) * (VSNR - VGSN) + VGSN
	VRN4 5-0 = 100010	((146R - 68R) / 450R) * (VSNR - VGSN) + VGSN
	VRN4 5-0 = 100011	((146R - 70R) / 450R) * (VSNR - VGSN) + VGSN
	VRN4 5-0 = 100100	((146R - 72R) / 450R) * (VSNR - VGSN) + VGSN
	VRN4 5-0 = 100101	((146R - 74R) / 450R) * (VSNR - VGSN) + VGSN
	VRN4 5-0 = 100110	((146R - 76R) / 450R) * (VSNR - VGSN) + VGSN
	VRN4 5-0 = 100111	((146R - 78R) / 450R) * (VSNR - VGSN) + VGSN
	VRN4 5-0 = 101000	((146R - 80R) / 450R) * (VSNR - VGSN) + VGSN
	VRN4 5-0 = 101001	((146R - 82R) / 450R) * (VSNR - VGSN) + VGSN
	VRN4 5-0 = 101010	((146R - 84R) / 450R) * (VSNR - VGSN) + VGSN
	VRN4 5-0 = 101011	((146R - 86R) / 450R) * (VSNR - VGSN) + VGSN
	VRN4 5-0 = 101100	((146R - 88R) / 450R) * (VSNR - VGSN) + VGSN
	VRN4 5-0 = 101101	((146R - 90R) / 450R) * (VSNR - VGSN) + VGSN
	VRN4 5-0 = 101110	((146R - 92R) / 450R) * (VSNR - VGSN) + VGSN
	VRN4 5-0 = 101111	((146R - 94R) / 450R) * (VSNR - VGSN) + VGSN
	VRN4 5-0 = 110000	((146R - 96R) / 450R) * (VSNR - VGSN) + VGSN
	VRN4 5-0 = 110001	((146R - 98R) / 450R) * (VSNR - VGSN) + VGSN
	VRN4 5-0 = 110010	((146R - 100R) / 450R) * (VSNR - VGSN) + VGSN
	VRN4 5-0 = 110011	((146R - 102R) / 450R) * (VSNR - VGSN) + VGSN
	VRN4 5-0 = 110100	((146R - 104R) / 450R) * (VSNR - VGSN) + VGSN
	VRN4 5-0 = 110101	((146R - 106R) / 450R) * (VSNR - VGSN) + VGSN
	VRN4 5-0 = 110110	((146R - 108R) / 450R) * (VSNR - VGSN) + VGSN
	VRN4 5-0 = 110111	((146R - 110R) / 450R) * (VSNR - VGSN) + VGSN
	VRN4 5-0 = 111000	((146R - 112R) / 450R) * (VSNR - VGSN) + VGSN
	VRN4 5-0 = 111001	((146R - 114R) / 450R) * (VSNR - VGSN) + VGSN
	VRN4 5-0 = 111010	((146R - 116R) / 450R) * (VSNR - VGSN) + VGSN
	VRN4 5-0 = 111011	((146R - 118R) / 450R) * (VSNR - VGSN) + VGSN
	VRN4 5-0 = 111100	((146R - 120R) / 450R) * (VSNR - VGSN) + VGSN
	VRN4 5-0 = 111101	((146R - 122R) / 450R) * (VSNR - VGSN) + VGSN
	VRN4 5-0 = 111110	((146R - 124R) / 450R) * (VSNR - VGSN) + VGSN
	VRN4 5-0 = 111111	((146R - 126R) / 450R) * (VSNR - VGSN) + VGSN

Table 5.25 VinN 15

Himax Confidential
This information contained herein is the exclusive property of Himax and shall not be distributed, reproduced, or disclosed in whole or in part without prior written permission of Himax.

Reference Voltage	Macro Adjustment Value	VinN16 Formula
VinN16	VRN5 5-0 = 000000	(144R / 450R) * (VSNR - VGSN) + VGSN
	VRN5 5-0 = 000001	((144R - 2R) / 450R) * (VSNR - VGSN) + VGSN
	VRN5 5-0 = 000010	((144R - 4R) / 450R) * (VSNR - VGSN) + VGSN
	VRN5 5-0 = 000011	((144R - 6R) / 450R) * (VSNR - VGSN) + VGSN
	VRN5 5-0 = 000100	((144R - 8R) / 450R) * (VSNR - VGSN) + VGSN
	VRN5 5-0 = 000101	((144R - 10R) / 450R) * (VSNR - VGSN) + VGSN
	VRN5 5-0 = 000110	((144R - 12R) / 450R) * (VSNR - VGSN) + VGSN
	VRN5 5-0 = 000111	((144R - 14R) / 450R) * (VSNR - VGSN) + VGSN
	VRN5 5-0 = 001000	((144R - 16R) / 450R) * (VSNR - VGSN) + VGSN
	VRN5 5-0 = 001001	((144R - 18R) / 450R) * (VSNR - VGSN) + VGSN
	VRN5 5-0 = 001010	((144R - 20R) / 450R) * (VSNR - VGSN) + VGSN
	VRN5 5-0 = 001011	((144R - 22R) / 450R) * (VSNR - VGSN) + VGSN
	VRN5 5-0 = 001100	((144R - 24R) / 450R) * (VSNR - VGSN) + VGSN
	VRN5 5-0 = 001101	((144R - 26R) / 450R) * (VSNR - VGSN) + VGSN
	VRN5 5-0 = 001110	((144R - 28R) / 450R) * (VSNR - VGSN) + VGSN
	VRN5 5-0 = 001111	((144R - 30R) / 450R) * (VSNR - VGSN) + VGSN
	VRN5 5-0 = 010000	((144R - 32R) / 450R) * (VSNR - VGSN) + VGSN
	VRN5 5-0 = 010001	((144R - 34R) / 450R) * (VSNR - VGSN) + VGSN
	VRN5 5-0 = 010010	((144R - 36R) / 450R) * (VSNR - VGSN) + VGSN
	VRN5 5-0 = 010011	((144R - 38R) / 450R) * (VSNR - VGSN) + VGSN
	VRN5 5-0 = 010100	((144R - 40R) / 450R) * (VSNR - VGSN) + VGSN
	VRN5 5-0 = 010101	((144R - 42R) / 450R) * (VSNR - VGSN) + VGSN
	VRN5 5-0 = 010110	((144R - 44R) / 450R) * (VSNR - VGSN) + VGSN
	VRN5 5-0 = 010111	((144R - 46R) / 450R) * (VSNR - VGSN) + VGSN
	VRN5 5-0 = 011000	((144R - 48R) / 450R) * (VSNR - VGSN) + VGSN
	VRN5 5-0 = 011001	((144R - 50R) / 450R) * (VSNR - VGSN) + VGSN
	VRN5 5-0 = 011010	((144R - 52R) / 450R) * (VSNR - VGSN) + VGSN
	VRN5 5-0 = 011011	((144R - 54R) / 450R) * (VSNR - VGSN) + VGSN
	VRN5 5-0 = 011100	((144R - 56R) / 450R) * (VSNR - VGSN) + VGSN
	VRN5 5-0 = 011101	((144R - 58R) / 450R) * (VSNR - VGSN) + VGSN
	VRN5 5-0 = 011110	((144R - 60R) / 450R) * (VSNR - VGSN) + VGSN
	VRN5 5-0 = 011111	((144R - 62R) / 450R) * (VSNR - VGSN) + VGSN
	VRN5 5-0 = 100000	((144R - 64R) / 450R) * (VSNR - VGSN) + VGSN
	VRN5 5-0 = 100001	((144R - 66R) / 450R) * (VSNR - VGSN) + VGSN
	VRN5 5-0 = 100010	((144R - 68R) / 450R) * (VSNR - VGSN) + VGSN
	VRN5 5-0 = 100011	((144R - 70R) / 450R) * (VSNR - VGSN) + VGSN
	VRN5 5-0 = 100100	((144R - 72R) / 450R) * (VSNR - VGSN) + VGSN
	VRN5 5-0 = 100101	((144R - 74R) / 450R) * (VSNR - VGSN) + VGSN
	VRN5 5-0 = 100110	((144R - 76R) / 450R) * (VSNR - VGSN) + VGSN
	VRN5 5-0 = 100111	((144R - 78R) / 450R) * (VSNR - VGSN) + VGSN
	VRN5 5-0 = 101000	((144R - 80R) / 450R) * (VSNR - VGSN) + VGSN
	VRN5 5-0 = 101001	((144R - 82R) / 450R) * (VSNR - VGSN) + VGSN
	VRN5 5-0 = 101010	((144R - 84R) / 450R) * (VSNR - VGSN) + VGSN
	VRN5 5-0 = 101011	((144R - 86R) / 450R) * (VSNR - VGSN) + VGSN
	VRN5 5-0 = 101100	((144R - 88R) / 450R) * (VSNR - VGSN) + VGSN
	VRN5 5-0 = 101101	((144R - 90R) / 450R) * (VSNR - VGSN) + VGSN
	VRN5 5-0 = 101110	((144R - 92R) / 450R) * (VSNR - VGSN) + VGSN
	VRN5 5-0 = 101111	((144R - 94R) / 450R) * (VSNR - VGSN) + VGSN
	VRN5 5-0 = 110000	((144R - 96R) / 450R) * (VSNR - VGSN) + VGSN
	VRN5 5-0 = 110001	((144R - 98R) / 450R) * (VSNR - VGSN) + VGSN
	VRN5 5-0 = 110010	((144R - 100R) / 450R) * (VSNR - VGSN) + VGSN
	VRN5 5-0 = 110011	((144R - 102R) / 450R) * (VSNR - VGSN) + VGSN
	VRN5 5-0 = 110100	((144R - 104R) / 450R) * (VSNR - VGSN) + VGSN
	VRN5 5-0 = 110101	((144R - 106R) / 450R) * (VSNR - VGSN) + VGSN
	VRN5 5-0 = 110110	((144R - 108R) / 450R) * (VSNR - VGSN) + VGSN
	VRN5 5-0 = 110111	((144R - 110R) / 450R) * (VSNR - VGSN) + VGSN
	VRN5 5-0 = 111000	((144R - 112R) / 450R) * (VSNR - VGSN) + VGSN
	VRN5 5-0 = 111001	((144R - 114R) / 450R) * (VSNR - VGSN) + VGSN
	VRN5 5-0 = 111010	((144R - 116R) / 450R) * (VSNR - VGSN) + VGSN
	VRN5 5-0 = 111011	((144R - 118R) / 450R) * (VSNR - VGSN) + VGSN
	VRN5 5-0 = 111100	((144R - 120R) / 450R) * (VSNR - VGSN) + VGSN
	VRN5 5-0 = 111101	((144R - 122R) / 450R) * (VSNR - VGSN) + VGSN
	VRN5 5-0 = 111110	((144R - 124R) / 450R) * (VSNR - VGSN) + VGSN
	VRN5 5-0 = 111111	VGSN

Table 5.26 VinN 16

Himax Confidential
This information contained herein is the exclusive property of Himax and shall not be distributed, reproduced, or disclosed in whole or in part without prior written permission of Himax.

Reference Voltage	Macro Adjustment Value	VinN5 Formula
VinN5	PRN0 6-0 = 0000000	(350R / 450R) (VSNR - VGSN) + VGSN
	PRN0 6-0 = 0000001	((350R - 2R) / 450R) * (VSNR - VGSN) + VGSN
	PRN0 6-0 = 0000010	((350R - 4R) / 450R) * (VSNR - VGSN) + VGSN
	PRN0 6-0 = 0000011	((350R – 6R) / 450R) * (VSNR - VGSN) + VGSN
	PRN0 6-0 = 0000100	((350R – 8R) / 450R) * (VSNR - VGSN) + VGSN
	PRN0 6-0 = 0000101	((350R – 10R) / 450R) * (VSNR - VGSN) + VGSN
	PRN0 6-0 = 0000110	((350R – 12R) / 450R) * (VSNR - VGSN) + VGSN
	PRN0 6-0 = 0000111	((350R - 14R) / 450R) * (VSNR - VGSN) + VGSN
	PRN0 6-0 = 0001000	((350R – 16R) / 450R) * (VSNR - VGSN) + VGSN
	PRN0 6-0 = 0001001	((350R – 18R) / 450R) * (VSNR - VGSN) + VGSN
	PRN0 6-0 = 0001010	((350R – 20R) / 450R) * (VSNR - VGSN) + VGSN
	PRN0 6-0 = 0001011	((350R – 22R) / 450R) * (VSNR - VGSN) + VGSN
	PRN0 6-0 = 0001100	((350R – 24R) / 450R) * (VSNR - VGSN) + VGSN
	PRN0 6-0 = 0001101	((350R – 26R) / 450R) * (VSNR - VGSN) + VGSN
	PRN0 6-0 = 0001110	((350R – 28R) / 450R) * (VSNR - VGSN) + VGSN
	PRN0 6-0 = 0001111	((350R – 30R) / 450R) * (VSNR - VGSN) + VGSN
	PRN0 6-0 = 0010000	((350R – 32R) / 450R) * (VSNR - VGSN) + VGSN
	PRN0 6-0 = 0010001	((350R - 34R) / 450R) * (VSNR - VGSN) + VGSN
	PRN0 6-0 = 0010010	((350R – 36R) / 450R) * (VSNR - VGSN) + VGSN
	PRN0 6-0 = 0010011	((350R – 38R) / 450R) * (VSNR - VGSN) + VGSN
	PRN0 6-0 = 0010100	((350R – 40R) / 450R) * (VSNR - VGSN) + VGSN
	PRN0 6-0 = 0010101	((350R – 42R) / 450R) * (VSNR - VGSN) + VGSN
	PRN0 6-0 = 0010110	((350R – 44R) / 450R) * (VSNR - VGSN) + VGSN
	PRN0 6-0 = 0010111	((350R – 46R) / 450R) * (VSNR - VGSN) + VGSN
	PRN0 6-0 = 0011000	((350R – 48R) / 450R) * (VSNR - VGSN) + VGSN
	PRN0 6-0 = 0011001	((350R – 50R) / 450R) * (VSNR - VGSN) + VGSN
	PRN0 6-0 = 0011010	((350R – 52R) / 450R) * (VSNR - VGSN) + VGSN
	PRN0 6-0 = 0011011	((350R - 54R) / 450R) * (VSNR - VGSN) + VGSN
	PRN0 6-0 = 0011100	((350R – 56R) / 450R) * (VSNR - VGSN) + VGSN
	PRN0 6-0 = 0011101	((350R – 58R) / 450R) * (VSNR - VGSN) + VGSN
	PRN0 6-0 = 0011110	((350R – 60R) / 450R) * (VSNR - VGSN) + VGSN
	PRN0 6-0 = 0011111	((350R – 62R) / 450R) * (VSNR - VGSN) + VGSN
	PRN0 6-0 = 0100000	((350R - 64R) / 450R) * (VSNR - VGSN) + VGSN
	PRN0 6-0 = 0100001	((350R – 66R) / 450R) * (VSNR - VGSN) + VGSN
	PRN0 6-0 = 0100010	((350R – 68R) / 450R) * (VSNR - VGSN) + VGSN
	PRN0 6-0 = 0100011	((350R – 70R) / 450R) * (VSNR - VGSN) + VGSN
	PRN0 6-0 = 0100100	((350R – 72R) / 450R) * (VSNR - VGSN) + VGSN
	PRN0 6-0 = 0100101	((350R – 74R) / 450R) * (VSNR - VGSN) + VGSN
	PRN0 6-0 = 0100110	((350R – 76R) / 450R) * (VSNR - VGSN) + VGSN
	PRN0 6-0 = 0100111	((350R – 78R) / 450R) * (VSNR - VGSN) + VGSN
	PRN0 6-0 = 0101000	((350R – 80R) / 450R) * (VSNR - VGSN) + VGSN
	PRN0 6-0 = 0101001	((350R – 82R) / 450R) * (VSNR - VGSN) + VGSN
	PRN0 6-0 = 0101010	((350R - 84R) / 450R) * (VSNR - VGSN) + VGSN
	PRN0 6-0 = 0101011	((350R – 86R) / 450R) * (VSNR - VGSN) + VGSN
	PRN0 6-0 = 0101100	((350R – 88R) / 450R) * (VSNR - VGSN) + VGSN
	PRN0 6-0 = 0101101	((350R – 90R) / 450R) * (VSNR - VGSN) + VGSN
	PRN0 6-0 = 0101110	((350R – 92R) / 450R) * (VSNR - VGSN) + VGSN
	PRN0 6-0 = 0101111	((350R – 94R) / 450R) * (VSNR - VGSN) + VGSN
	PRN0 6-0 = 0110000	((350R – 96R) / 450R) * (VSNR - VGSN) + VGSN
	PRN0 6-0 = 0110001	((350R – 98R) / 450R) * (VSNR - VGSN) + VGSN
	PRN0 6-0 = 0110010	((350R – 100R) / 450R) * (VSNR - VGSN) + VGSN
	PRN0 6-0 = 0110011	((350R – 102R) / 450R) * (VSNR - VGSN) + VGSN
	PRN0 6-0 = 0110100	((350R – 104R) / 450R) * (VSNR - VGSN) + VGSN
	PRN0 6-0 = 0110101	((350R – 106R) / 450R) * (VSNR - VGSN) + VGSN
	PRN0 6-0 = 0110110	((350R – 108R) / 450R) * (VSNR - VGSN) + VGSN
	PRN0 6-0 = 0110111	((350R – 110R) / 450R) * (VSNR - VGSN) + VGSN
	PRN0 6-0 = 0111000	((350R – 112R) / 450R) * (VSNR - VGSN) + VGSN
	PRN0 6-0 = 0111001	((350R – 114R) / 450R) * (VSNR - VGSN) + VGSN
	PRN0 6-0 = 0111010	((350R – 116R) / 450R) * (VSNR - VGSN) + VGSN
	PRN0 6-0 = 0111011	((350R – 118R) / 450R) * (VSNR - VGSN) + VGSN
	PRN0 6-0 = 0111100	((350R – 120R) / 450R) * (VSNR - VGSN) + VGSN
	PRN0 6-0 = 0111101	((350R – 122R) / 450R) * (VSNR - VGSN) + VGSN
	PRN0 6-0 = 0111110	((350R - 124R) / 450R) * (VSNR - VGSN) + VGSN
	PRN0 6-0 = 0111111	((350R – 126R) / 450R) * (VSNR - VGSN) + VGSN
	PRN0 6-0 = 1000000	((350R – 128R) / 450R) * (VSNR - VGSN) + VGSN
	PRN0 6-0 = 1000001	((350R – 130R) / 450R) * (VSNR - VGSN) + VGSN
	PRN0 6-0 = 1000010	((350R - 132R) / 450R) * (VSNR - VGSN) + VGSN
	PRN0 6-0 = 1000011	((350R – 134R) / 450R) * (VSNR - VGSN) + VGSN
	PRN0 6-0 = 1000100	((350R – 136R) / 450R) * (VSNR - VGSN) + VGSN

Himax Confidential
Do Not Copy

This information contained herein is the exclusive property of Himax and shall not be distributed, reproduced, or disclosed in whole or in part without prior written permission of Himax.

	PRN0 6-0 = 1000101	((350R – 138R) / 450R) * (VSNR - VGSN) + VGSN
	PRN0 6-0 = 1000110	((350R – 140R) / 450R) * (VSNR - VGSN) + VGSN
	PRN0 6-0 = 1000111	((350R – 142R) / 450R) * (VSNR - VGSN) + VGSN
	PRN0 6-0 = 1001000	((350R – 144R) / 450R) * (VSNR - VGSN) + VGSN
	PRN0 6-0 = 1001001	((350R – 146R) / 450R) * (VSNR - VGSN) + VGSN
	PRN0 6-0 = 1001010	((350R – 148R) / 450R) * (VSNR - VGSN) + VGSN
	PRN0 6-0 = 1001011	((350R – 150R) / 450R) * (VSNR - VGSN) + VGSN
	PRN0 6-0 = 1001100	((350R - 152R) / 450R) * (VSNR - VGSN) + VGSN
	PRN0 6-0 = 1001101	((350R – 154R) / 450R) * (VSNR - VGSN) + VGSN
	PRN0 6-0 = 1001110	((350R – 156R) / 450R) * (VSNR - VGSN) + VGSN
	PRN0 6-0 = 1001111	((350R – 158R) / 450R) * (VSNR - VGSN) + VGSN
	PRN0 6-0 = 1010000	((350R – 160R) / 450R) * (VSNR - VGSN) + VGSN
	PRN0 6-0 = 1010001	((350R – 162R) / 450R) * (VSNR - VGSN) + VGSN
	PRN0 6-0 = 1010010	((350R – 164R) / 450R) * (VSNR - VGSN) + VGSN
	PRN0 6-0 = 1010011	((350R – 166R) / 450R) * (VSNR - VGSN) + VGSN
	PRN0 6-0 = 1010100	((350R – 168R) / 450R) * (VSNR - VGSN) + VGSN
	PRN0 6-0 = 1010101	((350R – 170R) / 450R) * (VSNR - VGSN) + VGSN
	PRN0 6-0 = 1010110	((350R – 172R) / 450R) * (VSNR - VGSN) + VGSN
	PRN0 6-0 = 1010111	((350R - 174R) / 450R) * (VSNR - VGSN) + VGSN
	PRN0 6-0 = 1011000	-
	PRN0 6-0 = 1011001	-
	PRN0 6-0 = 1011010	-
	PRN0 6-0 = 1011011	-
	PRN0 6-0 = 1011100	-
	PRN0 6-0 = 1011101	-
	PRN0 6-0 = 1011110	-
	PRN0 6-0 = 1011111	-
	PRN0 6-0 = 1100000	-
	PRN0 6-0 = 1100001	-
	PRN0 6-0 = 1100010	-
	PRN0 6-0 = 1100011	-
	PRN0 6-0 = 1100100	-
	PRN0 6-0 = 1100101	-
	PRN0 6-0 = 1100110	-
	PRN0 6-0 = 1100111	-
	PRN0 6-0 = 1101000	-
	PRN0 6-0 = 1101001	-
	PRN0 6-0 = 1101010	-
	PRN0 6-0 = 1101011	-
	PRN0 6-0 = 1101100	-
	PRN0 6-0 = 1101101	-
	PRN0 6-0 = 1101110	-
	PRN0 6-0 = 1101111	-
	PRN0 6-0 = 1110000	-
	PRN0 6-0 = 1110001	-
	PRN0 6-0 = 1110010	-
	PRN0 6-0 = 1110011	-
	PRN0 6-0 = 1110100	-
	PRN0 6-0 = 1110101	-
	PRN0 6-0 = 1110110	-
	PRN0 6-0 = 1110111	-
	PRN0 6-0 = 1111000	-
	PRN0 6-0 = 1111001	-
	PRN0 6-0 = 1111010	-
	PRN0 6-0 = 1111011	-
	PRN0 6-0 = 1111100	-
	PRN0 6-0 = 1111101	-
	PRN0 6-0 = 1111110	-
	PRN0 6-0 = 1111111	-

Table 5.27 VinN5

Himax Confidential
Do Not Copy

Reference Voltage	Macro Adjustment Value	VinN11 Formula
VinN11	PRN1 6-0 = 0000000	(274R / 450R) (VSNR - VGSN) + VGSN
	PRN1 6-0 = 0000001	((274R - 2R) / 450R) * (VSNR - VGSN) + VGSN
	PRN1 6-0 = 0000010	((274R - 4R) / 450R) * (VSNR - VGSN) + VGSN
	PRN1 6-0 = 0000011	((274R – 6R) / 450R) * (VSNR - VGSN) + VGSN
	PRN1 6-0 = 0000100	((274R – 8R) / 450R) * (VSNR - VGSN) + VGSN
	PRN1 6-0 = 0000101	((274R – 10R) / 450R) * (VSNR - VGSN) + VGSN
	PRN1 6-0 = 0000110	((274R – 12R) / 450R) * (VSNR - VGSN) + VGSN
	PRN1 6-0 = 0000111	((274R - 14R) / 450R) * (VSNR - VGSN) + VGSN
	PRN1 6-0 = 0001000	((274R – 16R) / 450R) * (VSNR - VGSN) + VGSN
	PRN1 6-0 = 0001001	((274R – 18R) / 450R) * (VSNR - VGSN) + VGSN
	PRN1 6-0 = 0001010	((274R – 20R) / 450R) * (VSNR - VGSN) + VGSN
	PRN1 6-0 = 0001011	((274R – 22R) / 450R) * (VSNR - VGSN) + VGSN
	PRN1 6-0 = 0001100	((274R – 24R) / 450R) * (VSNR - VGSN) + VGSN
	PRN1 6-0 = 0001101	((274R – 26R) / 450R) * (VSNR - VGSN) + VGSN
	PRN1 6-0 = 0001110	((274R – 28R) / 450R) * (VSNR - VGSN) + VGSN
	PRN1 6-0 = 0001111	((274R – 30R) / 450R) * (VSNR - VGSN) + VGSN
	PRN1 6-0 = 0010000	((274R – 32R) / 450R) * (VSNR - VGSN) + VGSN
	PRN1 6-0 = 0010001	((274R - 34R) / 450R) * (VSNR - VGSN) + VGSN
	PRN1 6-0 = 0010010	((274R – 36R) / 450R) * (VSNR - VGSN) + VGSN
	PRN1 6-0 = 0010011	((274R – 38R) / 450R) * (VSNR - VGSN) + VGSN
	PRN1 6-0 = 0010100	((274R – 40R) / 450R) * (VSNR - VGSN) + VGSN
	PRN1 6-0 = 0010101	((274R – 42R) / 450R) * (VSNR - VGSN) + VGSN
	PRN1 6-0 = 0010110	((274R – 44R) / 450R) * (VSNR - VGSN) + VGSN
	PRN1 6-0 = 0010111	((274R – 46R) / 450R) * (VSNR - VGSN) + VGSN
	PRN1 6-0 = 0011000	((274R – 48R) / 450R) * (VSNR - VGSN) + VGSN
	PRN1 6-0 = 0011001	((274R – 50R) / 450R) * (VSNR - VGSN) + VGSN
	PRN1 6-0 = 0011010	((274R – 52R) / 450R) * (VSNR - VGSN) + VGSN
	PRN1 6-0 = 0011011	((274R - 54R) / 450R) * (VSNR - VGSN) + VGSN
	PRN1 6-0 = 0011100	((274R – 56R) / 450R) * (VSNR - VGSN) + VGSN
	PRN1 6-0 = 0011101	((274R – 58R) / 450R) * (VSNR - VGSN) + VGSN
	PRN1 6-0 = 0011110	((274R – 60R) / 450R) * (VSNR - VGSN) + VGSN
	PRN1 6-0 = 0011111	((274R – 62R) / 450R) * (VSNR - VGSN) + VGSN
	PRN1 6-0 = 0100000	((274R - 64R) / 450R) * (VSNR - VGSN) + VGSN
	PRN1 6-0 = 0100001	((274R – 66R) / 450R) * (VSNR - VGSN) + VGSN
	PRN1 6-0 = 0100010	((274R – 68R) / 450R) * (VSNR - VGSN) + VGSN
	PRN1 6-0 = 0100011	((274R – 70R) / 450R) * (VSNR - VGSN) + VGSN
	PRN1 6-0 = 0100100	((274R – 72R) / 450R) * (VSNR - VGSN) + VGSN
	PRN1 6-0 = 0100101	((274R – 74R) / 450R) * (VSNR - VGSN) + VGSN
	PRN1 6-0 = 0100110	((274R – 76R) / 450R) * (VSNR - VGSN) + VGSN
	PRN1 6-0 = 0100111	((274R – 78R) / 450R) * (VSNR - VGSN) + VGSN
	PRN1 6-0 = 0101000	((274R – 80R) / 450R) * (VSNR - VGSN) + VGSN
	PRN1 6-0 = 0101001	((274R – 82R) / 450R) * (VSNR - VGSN) + VGSN
	PRN1 6-0 = 0101010	((274R - 84R) / 450R) * (VSNR - VGSN) + VGSN
	PRN1 6-0 = 0101011	((274R – 86R) / 450R) * (VSNR - VGSN) + VGSN
	PRN1 6-0 = 0101100	((274R – 88R) / 450R) * (VSNR - VGSN) + VGSN
	PRN1 6-0 = 0101101	((274R – 90R) / 450R) * (VSNR - VGSN) + VGSN
	PRN1 6-0 = 0101110	((274R – 92R) / 450R) * (VSNR - VGSN) + VGSN
	PRN1 6-0 = 0101111	((274R – 94R) / 450R) * (VSNR - VGSN) + VGSN
	PRN1 6-0 = 0110000	((274R – 96R) / 450R) * (VSNR - VGSN) + VGSN
	PRN1 6-0 = 0110001	((274R – 98R) / 450R) * (VSNR - VGSN) + VGSN
	PRN1 6-0 = 0110010	((274R – 100R) / 450R) * (VSNR - VGSN) + VGSN
	PRN1 6-0 = 0110011	((274R – 102R) / 450R) * (VSNR - VGSN) + VGSN
	PRN1 6-0 = 0110100	((274R – 104R) / 450R) * (VSNR - VGSN) + VGSN
	PRN1 6-0 = 0110101	((274R – 106R) / 450R) * (VSNR - VGSN) + VGSN
	PRN1 6-0 = 0110110	((274R – 108R) / 450R) * (VSNR - VGSN) + VGSN
	PRN1 6-0 = 0110111	((274R – 110R) / 450R) * (VSNR - VGSN) + VGSN
	PRN1 6-0 = 0111000	((274R – 112R) / 450R) * (VSNR - VGSN) + VGSN
	PRN1 6-0 = 0111001	((274R – 114R) / 450R) * (VSNR - VGSN) + VGSN
	PRN1 6-0 = 0111010	((274R – 116R) / 450R) * (VSNR - VGSN) + VGSN
	PRN1 6-0 = 0111011	((274R – 118R) / 450R) * (VSNR - VGSN) + VGSN
	PRN1 6-0 = 0111100	((274R – 120R) / 450R) * (VSNR - VGSN) + VGSN
	PRN1 6-0 = 0111101	((274R – 122R) / 450R) * (VSNR - VGSN) + VGSN
	PRN1 6-0 = 0111110	((274R - 124R) / 450R) * (VSNR - VGSN) + VGSN
	PRN1 6-0 = 0111111	((274R – 126R) / 450R) * (VSNR - VGSN) + VGSN
	PRN1 6-0 = 1000000	((274R – 128R) / 450R) * (VSNR - VGSN) + VGSN
	PRN1 6-0 = 1000001	((274R – 130R) / 450R) * (VSNR - VGSN) + VGSN
	PRN1 6-0 = 1000010	((274R - 132R) / 450R) * (VSNR - VGSN) + VGSN
	PRN1 6-0 = 1000011	((274R – 134R) / 450R) * (VSNR - VGSN) + VGSN
	PRN1 6-0 = 1000100	((274R – 136R) / 450R) * (VSNR - VGSN) + VGSN

Himax Confidential
Do Not Copy

	PRN1 6-0 = 1000101	((274R – 138R) / 450R) * (VSNR - VGSN) + VGSN
	PRN1 6-0 = 1000110	((274R – 140R) / 450R) * (VSNR - VGSN) + VGSN
	PRN1 6-0 = 1000111	((274R – 142R) / 450R) * (VSNR - VGSN) + VGSN
	PRN1 6-0 = 1001000	((274R – 144R) / 450R) * (VSNR - VGSN) + VGSN
	PRN1 6-0 = 1001001	((274R – 146R) / 450R) * (VSNR - VGSN) + VGSN
	PRN1 6-0 = 1001010	((274R – 148R) / 450R) * (VSNR - VGSN) + VGSN
	PRN1 6-0 = 1001011	((274R – 150R) / 450R) * (VSNR - VGSN) + VGSN
	PRN1 6-0 = 1001100	((274R - 152R) / 450R) * (VSNR - VGSN) + VGSN
	PRN1 6-0 = 1001101	((274R – 154R) / 450R) * (VSNR - VGSN) + VGSN
	PRN1 6-0 = 1001110	((274R – 156R) / 450R) * (VSNR - VGSN) + VGSN
	PRN1 6-0 = 1001111	((274R – 158R) / 450R) * (VSNR - VGSN) + VGSN
	PRN1 6-0 = 1010000	((274R – 160R) / 450R) * (VSNR - VGSN) + VGSN
	PRN1 6-0 = 1010001	((274R – 162R) / 450R) * (VSNR - VGSN) + VGSN
	PRN1 6-0 = 1010010	((274R – 164R) / 450R) * (VSNR - VGSN) + VGSN
	PRN1 6-0 = 1010011	((274R – 166R) / 450R) * (VSNR - VGSN) + VGSN
	PRN1 6-0 = 1010100	((274R – 168R) / 450R) * (VSNR - VGSN) + VGSN
	PRN1 6-0 = 1010101	((274R – 170R) / 450R) * (VSNR - VGSN) + VGSN
	PRN1 6-0 = 1010110	((274R – 172R) / 450R) * (VSNR - VGSN) + VGSN
	PRN1 6-0 = 1010111	((274R - 174R) / 450R) * (VSNR - VGSN) + VGSN
	PRN1 6-0 = 1011000	-
	PRN1 6-0 = 1011001	-
	PRN1 6-0 = 1011010	-
	PRN1 6-0 = 1011011	-
	PRN1 6-0 = 1011100	-
	PRN1 6-0 = 1011101	-
	PRN1 6-0 = 1011110	-
	PRN1 6-0 = 1011111	-
	PRN1 6-0 = 1100000	-
	PRN1 6-0 = 1100001	-
	PRN1 6-0 = 1100010	-
	PRN1 6-0 = 1100011	-
	PRN1 6-0 = 1100100	-
	PRN1 6-0 = 1100101	-
	PRN1 6-0 = 1100110	-
	PRN1 6-0 = 1100111	-
	PRN1 6-0 = 1101000	-
	PRN1 6-0 = 1101001	-
	PRN1 6-0 = 1101010	-
	PRN1 6-0 = 1101011	-
	PRN1 6-0 = 1101100	-
	PRN1 6-0 = 1101101	-
	PRN1 6-0 = 1101110	-
	PRN1 6-0 = 1101111	-
	PRN1 6-0 = 1110000	-
	PRN1 6-0 = 1110001	-
	PRN1 6-0 = 1110010	-
	PRN1 6-0 = 1110011	-
	PRN1 6-0 = 1110100	-
	PRN1 6-0 = 1110101	-
	PRN1 6-0 = 1110110	-
	PRN1 6-0 = 1110111	-
	PRN1 6-0 = 1111000	-
	PRN1 6-0 = 1111001	-
	PRN1 6-0 = 1111010	-
	PRN1 6-0 = 1111011	-
	PRN1 6-0 = 1111100	-
	PRN1 6-0 = 1111101	-
	PRN1 6-0 = 1111110	-
	PRN1 6-0 = 1111111	-

Table 5.28 VinN 11

Himax Confidential
Do Not Copy

Reference Voltage	Macro Adjustment Value	VinN3 Formula
VinN3	PKN0 4-0 = 00000	(47R / 48R) * (VinN2 - VinN5) + VinN5
	PKN0 4-0 = 00001	((47R – 1R) / 48R) * (VinN2 - VinN5) + VinN5
	PKN0 4-0 = 00010	((47R – 2R) / 48R) * (VinN2 - VinN5) + VinN5
	PKN0 4-0 = 00011	((47R – 3R) / 48R) * (VinN2 - VinN5) + VinN5
	PKN0 4-0 = 00100	((47R – 4R) / 48R) * (VinN2 - VinN5) + VinN5
	PKN0 4-0 = 00101	((47R – 5R) / 48R) * (VinN2 - VinN5) + VinN5
	PKN0 4-0 = 00110	((47R – 6R) / 48R) * (VinN2 - VinN5) + VinN5
	PKN0 4-0 = 00111	((47R – 7R) / 48R) * (VinN2 - VinN5) + VinN5
	PKN0 4-0 = 01000	((47R – 8R) / 48R) * (VinN2 - VinN5) + VinN5
	PKN0 4-0 = 01001	((47R – 9R) / 48R) * (VinN2 - VinN5) + VinN5
	PKN0 4-0 = 01010	((47R - 10R) / 48R) * (VinN2 - VinN5) + VinN5
	PKN0 4-0 = 01011	((47R - 11R) / 48R) * (VinN2 - VinN5) + VinN5
	PKN0 4-0 = 01100	((47R - 12R) / 48R) * (VinN2 - VinN5) + VinN5
	PKN0 4-0 = 01101	((47R - 13R) / 48R) * (VinN2 - VinN5) + VinN5
	PKN0 4-0 = 01110	((47R - 14R) / 48R) * (VinN2 - VinN5) + VinN5
	PKN0 4-0 = 01111	((47R - 15R) / 48R) * (VinN2 - VinN5) + VinN5
	PKN0 4-0 = 10000	((47R - 16R) / 48R) * (VinN2 - VinN5) + VinN5
	PKN0 4-0 = 10001	((47R - 17R) / 48R) * (VinN2 - VinN5) + VinN5
	PKN0 4-0 = 10010	((47R - 18R) / 48R) * (VinN2 - VinN5) + VinN5
	PKN0 4-0 = 10011	((47R - 19R) / 48R) * (VinN2 - VinN5) + VinN5
	PKN0 4-0 = 10100	((47R - 20R) / 48R) * (VinN2 - VinN5) + VinN5
	PKN0 4-0 = 10101	((47R - 21R) / 48R) * (VinN2 - VinN5) + VinN5
	PKN0 4-0 = 10110	((47R - 22R) / 48R) * (VinN2 - VinN5) + VinN5
	PKN0 4-0 = 10111	((47R - 23R) / 48R) * (VinN2 - VinN5) + VinN5
	PKN0 4-0 = 11000	((47R - 24R) / 48R) * (VinN2 - VinN5) + VinN5
	PKN0 4-0 = 11001	((47R - 25R) / 48R) * (VinN2 - VinN5) + VinN5
	PKN0 4-0 = 11010	((47R - 26R) / 48R) * (VinN2 - VinN5) + VinN5
	PKN0 4-0 = 11011	((47R - 27R) / 48R) * (VinN2 - VinN5) + VinN5
	PKN0 4-0 = 11100	((47R - 28R) / 48R) * (VinN2 - VinN5) + VinN5
	PKN0 4-0 = 11101	((47R - 29R) / 48R) * (VinN2 - VinN5) + VinN5
	PKN0 4-0 = 11110	((47R - 30R) / 48R) * (VinN2 - VinN5) + VinN5
	PKN0 4-0 = 11111	((47R - 31R) / 48R) * (VinN2 - VinN5) + VinN5

Table 5.29 VinN 3

Himax Confidential
Do Not Copy

This information contained herein is the exclusive property of Himax and shall not be distributed, reproduced, or disclosed in whole or in part without prior written permission of Himax.

Reference Voltage	Macro Adjustment Value	VinN4 Formula
VinN4	PKN1 4-0 = 00000	(32R / 48R) * (VinN2 - VinN5) + VinN5
	PKN1 4-0 = 00001	((32R - 1R) / 48R) * (VinN2 - VinN5) + VinN5
	PKN1 4-0 = 00010	((32R - 2R) / 48R) * (VinN2 - VinN5) + VinN5
	PKN1 4-0 = 00011	((32R - 3R) / 48R) * (VinN2 - VinN5) + VinN5
	PKN1 4-0 = 00100	((32R - 4R) / 48R) * (VinN2 - VinN5) + VinN5
	PKN1 4-0 = 00101	((32R - 5R) / 48R) * (VinN2 - VinN5) + VinN5
	PKN1 4-0 = 00110	((32R - 6R) / 48R) * (VinN2 - VinN5) + VinN5
	PKN1 4-0 = 00111	((32R - 7R) / 48R) * (VinN2 - VinN5) + VinN5
	PKN1 4-0 = 01000	((32R - 8R) / 48R) * (VinN2 - VinN5) + VinN5
	PKN1 4-0 = 01001	((32R - 9R) / 48R) * (VinN2 - VinN5) + VinN5
	PKN1 4-0 = 01010	((32R - 10R) / 48R) * (VinN2 - VinN5) + VinN5
	PKN1 4-0 = 01011	((32R - 11R) / 48R) * (VinN2 - VinN5) + VinN5
	PKN1 4-0 = 01100	((32R - 12R) / 48R) * (VinN2 - VinN5) + VinN5
	PKN1 4-0 = 01101	((32R - 13R) / 48R) * (VinN2 - VinN5) + VinN5
	PKN1 4-0 = 01110	((32R - 14R) / 48R) * (VinN2 - VinN5) + VinN5
	PKN1 4-0 = 01111	((32R - 15R) / 48R) * (VinN2 - VinN5) + VinN5
	PKN1 4-0 = 10000	((32R - 16R) / 48R) * (VinN2 - VinN5) + VinN5
	PKN1 4-0 = 10001	((32R - 17R) / 48R) * (VinN2 - VinN5) + VinN5
	PKN1 4-0 = 10010	((32R - 18R) / 48R) * (VinN2 - VinN5) + VinN5
	PKN1 4-0 = 10011	((32R - 19R) / 48R) * (VinN2 - VinN5) + VinN5
	PKN1 4-0 = 10100	((32R - 20R) / 48R) * (VinN2 - VinN5) + VinN5
	PKN1 4-0 = 10101	((32R - 21R) / 48R) * (VinN2 - VinN5) + VinN5
	PKN1 4-0 = 10110	((32R - 22R) / 48R) * (VinN2 - VinN5) + VinN5
	PKN1 4-0 = 10111	((32R - 23R) / 48R) * (VinN2 - VinN5) + VinN5
	PKN1 4-0 = 11000	((32R - 24R) / 48R) * (VinN2 - VinN5) + VinN5
	PKN1 4-0 = 11001	((32R - 25R) / 48R) * (VinN2 - VinN5) + VinN5
	PKN1 4-0 = 11010	((32R - 26R) / 48R) * (VinN2 - VinN5) + VinN5
	PKN1 4-0 = 11011	((32R - 27R) / 48R) * (VinN2 - VinN5) + VinN5
	PKN1 4-0 = 11100	((32R - 28R) / 48R) * (VinN2 - VinN5) + VinN5
	PKN1 4-0 = 11101	((32R - 29R) / 48R) * (VinN2 - VinN5) + VinN5
	PKN1 4-0 = 11110	((32R - 30R) / 48R) * (VinN2 - VinN5) + VinN5
	PKN1 4-0 = 11111	((32R - 31R) / 48R) * (VinN2 - VinN5) + VinN5

Table 5.30 VinN 4

Reference Voltage	Macro Adjustment Value	VinN6 Formula
VinN6	PKN2 4-0 = 00000	(220R / 223R) * (VinN5 - VinN11) + VinN11
	PKN2 4-0 = 00001	((220R - 3R) / 223R) * (VinN5 - VinN11) + VinN11
	PKN2 4-0 = 00010	((220R - 6R) / 223R) * (VinN5 - VinN11) + VinN11
	PKN2 4-0 = 00011	((220R - 9R) / 223R) * (VinN5 - VinN11) + VinN11
	PKN2 4-0 = 00100	((220R - 12R) / 223R) * (VinN5 - VinN11) + VinN11
	PKN2 4-0 = 00101	((220R - 15R) / 223R) * (VinN5 - VinN11) + VinN11
	PKN2 4-0 = 00110	((220R - 18R) / 223R) * (VinN5 - VinN11) + VinN11
	PKN2 4-0 = 00111	((220R - 21R) / 223R) * (VinN5 - VinN11) + VinN11
	PKN2 4-0 = 01000	((220R - 24R) / 223R) * (VinN5 - VinN11) + VinN11
	PKN2 4-0 = 01001	((220R - 27R) / 223R) * (VinN5 - VinN11) + VinN11
	PKN2 4-0 = 01010	((220R - 30R) / 223R) * (VinN5 - VinN11) + VinN11
	PKN2 4-0 = 01011	((220R - 33R) / 223R) * (VinN5 - VinN11) + VinN11
	PKN2 4-0 = 01100	((220R - 36R) / 223R) * (VinN5 - VinN11) + VinN11
	PKN2 4-0 = 01101	((220R - 39R) / 223R) * (VinN5 - VinN11) + VinN11
	PKN2 4-0 = 01110	((220R - 42R) / 223R) * (VinN5 - VinN11) + VinN11
	PKN2 4-0 = 01111	((220R - 45R) / 223R) * (VinN5 - VinN11) + VinN11
	PKN2 4-0 = 10000	((220R - 48R) / 223R) * (VinN5 - VinN11) + VinN11
	PKN2 4-0 = 10001	((220R - 51R) / 223R) * (VinN5 - VinN11) + VinN11
	PKN2 4-0 = 10010	((220R - 54R) / 223R) * (VinN5 - VinN11) + VinN11
	PKN2 4-0 = 10011	((220R - 57R) / 223R) * (VinN5 - VinN11) + VinN11
	PKN2 4-0 = 10100	((220R - 60R) / 223R) * (VinN5 - VinN11) + VinN11
	PKN2 4-0 = 10101	((220R - 63R) / 223R) * (VinN5 - VinN11) + VinN11
	PKN2 4-0 = 10110	((220R - 66R) / 223R) * (VinN5 - VinN11) + VinN11
	PKN2 4-0 = 10111	((220R - 69R) / 223R) * (VinN5 - VinN11) + VinN11
	PKN2 4-0 = 11000	((220R - 72R) / 223R) * (VinN5 - VinN11) + VinN11
	PKN2 4-0 = 11001	((220R - 75R) / 223R) * (VinN5 - VinN11) + VinN11
	PKN2 4-0 = 11010	((220R - 78R) / 223R) * (VinN5 - VinN11) + VinN11
	PKN2 4-0 = 11011	((220R - 81R) / 223R) * (VinN5 - VinN11) + VinN11
	PKN2 4-0 = 11100	((220R - 84R) / 223R) * (VinN5 - VinN11) + VinN11
	PKN2 4-0 = 11101	((220R - 87R) / 223R) * (VinN5 - VinN11) + VinN11
	PKN2 4-0 = 11110	((220R - 90R) / 223R) * (VinN5 - VinN11) + VinN11
	PKN2 4-0 = 11111	((220R - 93R) / 223R) * (VinN5 - VinN11) + VinN11

Table 5.31 VinN 6

Himax Confidential
Do Not Copy

Reference Voltage	Macro Adjustment Value	VinN7 Formula
VinN7	PKN3 4-0 = 00000	(193R / 223R) * (VinN5 - VinN11) + VinN11
	PKN3 4-0 = 00001	((193R - 3R) / 223R) * (VinN5 - VinN11) + VinN11
	PKN3 4-0 = 00010	((193R - 6R) / 223R) * (VinN5 - VinN11) + VinN11
	PKN3 4-0 = 00011	((193R - 9R) / 223R) * (VinN5 - VinN11) + VinN11
	PKN3 4-0 = 00100	((193R - 12R) / 223R) * (VinN5 - VinN11) + VinN11
	PKN3 4-0 = 00101	((193R - 15R) / 223R) * (VinN5 - VinN11) + VinN11
	PKN3 4-0 = 00110	((193R - 18R) / 223R) * (VinN5 - VinN11) + VinN11
	PKN3 4-0 = 00111	((193R - 21R) / 223R) * (VinN5 - VinN11) + VinN11
	PKN3 4-0 = 01000	((193R - 24R) / 223R) * (VinN5 - VinN11) + VinN11
	PKN3 4-0 = 01001	((193R - 27R) / 223R) * (VinN5 - VinN11) + VinN11
	PKN3 4-0 = 01010	((193R - 30R) / 223R) * (VinN5 - VinN11) + VinN11
	PKN3 4-0 = 01011	((193R - 33R) / 223R) * (VinN5 - VinN11) + VinN11
	PKN3 4-0 = 01100	((193R - 36R) / 223R) * (VinN5 - VinN11) + VinN11
	PKN3 4-0 = 01101	((193R - 39R) / 223R) * (VinN5 - VinN11) + VinN11
	PKN3 4-0 = 01110	((193R - 42R) / 223R) * (VinN5 - VinN11) + VinN11
	PKN3 4-0 = 01111	((193R - 45R) / 223R) * (VinN5 - VinN11) + VinN11
	PKN3 4-0 = 10000	((193R - 48R) / 223R) * (VinN5 - VinN11) + VinN11
	PKN3 4-0 = 10001	((193R - 51R) / 223R) * (VinN5 - VinN11) + VinN11
	PKN3 4-0 = 10010	((193R - 54R) / 223R) * (VinN5 - VinN11) + VinN11
	PKN3 4-0 = 10011	((193R - 57R) / 223R) * (VinN5 - VinN11) + VinN11
	PKN3 4-0 = 10100	((193R - 60R) / 223R) * (VinN5 - VinN11) + VinN11
	PKN3 4-0 = 10101	((193R - 63R) / 223R) * (VinN5 - VinN11) + VinN11
	PKN3 4-0 = 10110	((193R - 66R) / 223R) * (VinN5 - VinN11) + VinN11
	PKN3 4-0 = 10111	((193R - 69R) / 223R) * (VinN5 - VinN11) + VinN11
	PKN3 4-0 = 11000	((193R - 72R) / 223R) * (VinN5 - VinN11) + VinN11
	PKN3 4-0 = 11001	((193R - 75R) / 223R) * (VinN5 - VinN11) + VinN11
	PKN3 4-0 = 11010	((193R - 78R) / 223R) * (VinN5 - VinN11) + VinN11
	PKN3 4-0 = 11011	((193R - 81R) / 223R) * (VinN5 - VinN11) + VinN11
	PKN3 4-0 = 11100	((193R - 84R) / 223R) * (VinN5 - VinN11) + VinN11
	PKN3 4-0 = 11101	((193R - 87R) / 223R) * (VinN5 - VinN11) + VinN11
	PKN3 4-0 = 11110	((193R - 90R) / 223R) * (VinN5 - VinN11) + VinN11
	PKN3 4-0 = 11111	((193R - 93R) / 223R) * (VinN5 - VinN11) + VinN11

Table 5.32 VinN 7

Reference Voltage	Macro Adjustment Value	VinN8 Formula
VinN8	PKN4 4-0 = 00000	(158R / 223R) * (VinN5 - VinN11) + VinN11
	PKN4 4-0 = 00001	((158R - 3R) / 223R) * (VinN5 - VinN11) + VinN11
	PKN4 4-0 = 00010	((158R - 6R) / 223R) * (VinN5 - VinN11) + VinN11
	PKN4 4-0 = 00011	((158R - 9R) / 223R) * (VinN5 - VinN11) + VinN11
	PKN4 4-0 = 00100	((158R - 12R) / 223R) * (VinN5 - VinN11) + VinN11
	PKN4 4-0 = 00101	((158R - 15R) / 223R) * (VinN5 - VinN11) + VinN11
	PKN4 4-0 = 00110	((158R - 18R) / 223R) * (VinN5 - VinN11) + VinN11
	PKN4 4-0 = 00111	((158R - 21R) / 223R) * (VinN5 - VinN11) + VinN11
	PKN4 4-0 = 01000	((158R - 24R) / 223R) * (VinN5 - VinN11) + VinN11
	PKN4 4-0 = 01001	((158R - 27R) / 223R) * (VinN5 - VinN11) + VinN11
	PKN4 4-0 = 01010	((158R - 30R) / 223R) * (VinN5 - VinN11) + VinN11
	PKN4 4-0 = 01011	((158R - 33R) / 223R) * (VinN5 - VinN11) + VinN11
	PKN4 4-0 = 01100	((158R - 36R) / 223R) * (VinN5 - VinN11) + VinN11
	PKN4 4-0 = 01101	((158R - 39R) / 223R) * (VinN5 - VinN11) + VinN11
	PKN4 4-0 = 01110	((158R - 42R) / 223R) * (VinN5 - VinN11) + VinN11
	PKN4 4-0 = 01111	((158R - 45R) / 223R) * (VinN5 - VinN11) + VinN11
	PKN4 4-0 = 10000	((158R - 48R) / 223R) * (VinN5 - VinN11) + VinN11
	PKN4 4-0 = 10001	((158R - 51R) / 223R) * (VinN5 - VinN11) + VinN11
	PKN4 4-0 = 10010	((158R - 54R) / 223R) * (VinN5 - VinN11) + VinN11
	PKN4 4-0 = 10011	((158R - 57R) / 223R) * (VinN5 - VinN11) + VinN11
	PKN4 4-0 = 10100	((158R - 60R) / 223R) * (VinN5 - VinN11) + VinN11
	PKN4 4-0 = 10101	((158R - 63R) / 223R) * (VinN5 - VinN11) + VinN11
	PKN4 4-0 = 10110	((158R - 66R) / 223R) * (VinN5 - VinN11) + VinN11
	PKN4 4-0 = 10111	((158R - 69R) / 223R) * (VinN5 - VinN11) + VinN11
	PKN4 4-0 = 11000	((158R - 72R) / 223R) * (VinN5 - VinN11) + VinN11
	PKN4 4-0 = 11001	((158R - 75R) / 223R) * (VinN5 - VinN11) + VinN11
	PKN4 4-0 = 11010	((158R - 78R) / 223R) * (VinN5 - VinN11) + VinN11
	PKN4 4-0 = 11011	((158R - 81R) / 223R) * (VinN5 - VinN11) + VinN11
	PKN4 4-0 = 11100	((158R - 84R) / 223R) * (VinN5 - VinN11) + VinN11
	PKN4 4-0 = 11101	((158R - 87R) / 223R) * (VinN5 - VinN11) + VinN11
	PKN4 4-0 = 11110	((158R - 90R) / 223R) * (VinN5 - VinN11) + VinN11
	PKN4 4-0 = 11111	((158R - 93R) / 223R) * (VinN5 - VinN11) + VinN11

Table 5.33 VinN 8

Himax Confidential
Do Not Copy

This information contained herein is the exclusive property of Himax and shall not be distributed, reproduced, or disclosed in whole or in part without prior written permission of Himax.

Reference Voltage	Macro Adjustment Value	VinN9 Formula
VinN9	PKN5 4-0 = 00000	(123R / 223R) * (VinN5 - VinN11) + VinN11
	PKN5 4-0 = 00001	((123R - 3R) / 223R) * (VinN5 - VinN11) + VinN11
	PKN5 4-0 = 00010	((123R - 6R) / 223R) * (VinN5 - VinN11) + VinN11
	PKN5 4-0 = 00011	((123R - 9R) / 223R) * (VinN5 - VinN11) + VinN11
	PKN5 4-0 = 00100	((123R - 12R) / 223R) * (VinN5 - VinN11) + VinN11
	PKN5 4-0 = 00101	((123R - 15R) / 223R) * (VinN5 - VinN11) + VinN11
	PKN5 4-0 = 00110	((123R - 18R) / 223R) * (VinN5 - VinN11) + VinN11
	PKN5 4-0 = 00111	((123R - 21R) / 223R) * (VinN5 - VinN11) + VinN11
	PKN5 4-0 = 01000	((123R - 24R) / 223R) * (VinN5 - VinN11) + VinN11
	PKN5 4-0 = 01001	((123R - 27R) / 223R) * (VinN5 - VinN11) + VinN11
	PKN5 4-0 = 01010	((123R - 30R) / 223R) * (VinN5 - VinN11) + VinN11
	PKN5 4-0 = 01011	((123R - 33R) / 223R) * (VinN5 - VinN11) + VinN11
	PKN5 4-0 = 01100	((123R - 36R) / 223R) * (VinN5 - VinN11) + VinN11
	PKN5 4-0 = 01101	((123R - 39R) / 223R) * (VinN5 - VinN11) + VinN11
	PKN5 4-0 = 01110	((123R - 42R) / 223R) * (VinN5 - VinN11) + VinN11
	PKN5 4-0 = 01111	((123R - 45R) / 223R) * (VinN5 - VinN11) + VinN11
	PKN5 4-0 = 10000	((123R - 48R) / 223R) * (VinN5 - VinN11) + VinN11
	PKN5 4-0 = 10001	((123R - 51R) / 223R) * (VinN5 - VinN11) + VinN11
	PKN5 4-0 = 10010	((123R - 54R) / 223R) * (VinN5 - VinN11) + VinN11
	PKN5 4-0 = 10011	((123R - 57R) / 223R) * (VinN5 - VinN11) + VinN11
	PKN5 4-0 = 10100	((123R - 60R) / 223R) * (VinN5 - VinN11) + VinN11
	PKN5 4-0 = 10101	((123R - 63R) / 223R) * (VinN5 - VinN11) + VinN11
	PKN5 4-0 = 10110	((123R - 66R) / 223R) * (VinN5 - VinN11) + VinN11
	PKN5 4-0 = 10111	((123R - 69R) / 223R) * (VinN5 - VinN11) + VinN11
	PKN5 4-0 = 11000	((123R - 72R) / 223R) * (VinN5 - VinN11) + VinN11
	PKN5 4-0 = 11001	((123R - 75R) / 223R) * (VinN5 - VinN11) + VinN11
	PKN5 4-0 = 11010	((123R - 78R) / 223R) * (VinN5 - VinN11) + VinN11
	PKN5 4-0 = 11011	((123R - 81R) / 223R) * (VinN5 - VinN11) + VinN11
	PKN5 4-0 = 11100	((123R - 84R) / 223R) * (VinN5 - VinN11) + VinN11
	PKN5 4-0 = 11101	((123R - 87R) / 223R) * (VinN5 - VinN11) + VinN11
	PKN5 4-0 = 11110	((123R - 90R) / 223R) * (VinN5 - VinN11) + VinN11
	PKN5 4-0 = 11111	((123R - 93R) / 223R) * (VinN5 - VinN11) + VinN11

Table 5.34 VinN 9

Reference Voltage	Macro Adjustment Value	VinN10 Formula
VinN10	PKN6 4-0 = 00000	(96R / 223R) * (VinN5 - VinN11) + VinN11
	PKN6 4-0 = 00001	((96R - 3R) / 223R) * (VinN5 - VinN11) + VinN11
	PKN6 4-0 = 00010	((96R - 6R) / 223R) * (VinN5 - VinN11) + VinN11
	PKN6 4-0 = 00011	((96R - 9R) / 223R) * (VinN5 - VinN11) + VinN11
	PKN6 4-0 = 00100	((96R - 12R) / 223R) * (VinN5 - VinN11) + VinN11
	PKN6 4-0 = 00101	((96R - 15R) / 223R) * (VinN5 - VinN11) + VinN11
	PKN6 4-0 = 00110	((96R - 18R) / 223R) * (VinN5 - VinN11) + VinN11
	PKN6 4-0 = 00111	((96R - 21R) / 223R) * (VinN5 - VinN11) + VinN11
	PKN6 4-0 = 01000	((96R - 24R) / 223R) * (VinN5 - VinN11) + VinN11
	PKN6 4-0 = 01001	((96R - 27R) / 223R) * (VinN5 - VinN11) + VinN11
	PKN6 4-0 = 01010	((96R - 30R) / 223R) * (VinN5 - VinN11) + VinN11
	PKN6 4-0 = 01011	((96R - 33R) / 223R) * (VinN5 - VinN11) + VinN11
	PKN6 4-0 = 01100	((96R - 36R) / 223R) * (VinN5 - VinN11) + VinN11
	PKN6 4-0 = 01101	((96R - 39R) / 223R) * (VinN5 - VinN11) + VinN11
	PKN6 4-0 = 01110	((96R - 42R) / 223R) * (VinN5 - VinN11) + VinN11
	PKN6 4-0 = 01111	((96R - 45R) / 223R) * (VinN5 - VinN11) + VinN11
	PKN6 4-0 = 10000	((96R - 48R) / 223R) * (VinN5 - VinN11) + VinN11
	PKN6 4-0 = 10001	((96R - 51R) / 223R) * (VinN5 - VinN11) + VinN11
	PKN6 4-0 = 10010	((96R - 54R) / 223R) * (VinN5 - VinN11) + VinN11
	PKN6 4-0 = 10011	((96R - 57R) / 223R) * (VinN5 - VinN11) + VinN11
	PKN6 4-0 = 10100	((96R - 60R) / 223R) * (VinN5 - VinN11) + VinN11
	PKN6 4-0 = 10101	((96R - 63R) / 223R) * (VinN5 - VinN11) + VinN11
	PKN6 4-0 = 10110	((96R - 66R) / 223R) * (VinN5 - VinN11) + VinN11
	PKN6 4-0 = 10111	((96R - 69R) / 223R) * (VinN5 - VinN11) + VinN11
	PKN6 4-0 = 11000	((96R - 72R) / 223R) * (VinN5 - VinN11) + VinN11
	PKN6 4-0 = 11001	((96R - 75R) / 223R) * (VinN5 - VinN11) + VinN11
	PKN6 4-0 = 11010	((96R - 78R) / 223R) * (VinN5 - VinN11) + VinN11
	PKN6 4-0 = 11011	((96R - 81R) / 223R) * (VinN5 - VinN11) + VinN11
	PKN6 4-0 = 11100	((96R - 84R) / 223R) * (VinN5 - VinN11) + VinN11
	PKN6 4-0 = 11101	((96R - 87R) / 223R) * (VinN5 - VinN11) + VinN11
	PKN6 4-0 = 11110	((96R - 90R) / 223R) * (VinN5 - VinN11) + VinN11
	PKN6 4-0 = 11111	((96R - 93R) / 223R) * (VinN5 - VinN11) + VinN11

Table 5.35 VinN 10

Himax Confidential
Do Not Copy

Reference Voltage	Macro Adjustment Value	VinN12 Formula
VinN12	PKN7 4-0 = 00000	(47R / 48R) * (VinN11 - VinN14) + VinN14
	PKN7 4-0 = 00001	((47R - 1R) / 48R) * (VinN11 - VinN14) + VinN14
	PKN7 4-0 = 00010	((47R - 2R) / 48R) * (VinN11 - VinN14) + VinN14
	PKN7 4-0 = 00011	((47R - 3R) / 48R) * (VinN11 - VinN14) + VinN14
	PKN7 4-0 = 00100	((47R - 4R) / 48R) * (VinN11 - VinN14) + VinN14
	PKN7 4-0 = 00101	((47R - 5R) / 48R) * (VinN11 - VinN14) + VinN14
	PKN7 4-0 = 00110	((47R - 6R) / 48R) * (VinN11 - VinN14) + VinN14
	PKN7 4-0 = 00111	((47R - 7R) / 48R) * (VinN11 - VinN14) + VinN14
	PKN7 4-0 = 01000	((47R - 8R) / 48R) * (VinN11 - VinN14) + VinN14
	PKN7 4-0 = 01001	((47R - 9R) / 48R) * (VinN11 - VinN14) + VinN14
	PKN7 4-0 = 01010	((47R - 10R) / 48R) * (VinN11 - VinN14) + VinN14
	PKN7 4-0 = 01011	((47R - 11R) / 48R) * (VinN11 - VinN14) + VinN14
	PKN7 4-0 = 01100	((47R - 12R) / 48R) * (VinN11 - VinN14) + VinN14
	PKN7 4-0 = 01101	((47R - 13R) / 48R) * (VinN11 - VinN14) + VinN14
	PKN7 4-0 = 01110	((47R - 14R) / 48R) * (VinN11 - VinN14) + VinN14
	PKN7 4-0 = 01111	((47R - 15R) / 48R) * (VinN11 - VinN14) + VinN14
	PKN7 4-0 = 10000	((47R - 16R) / 48R) * (VinN11 - VinN14) + VinN14
	PKN7 4-0 = 10001	((47R - 17R) / 48R) * (VinN11 - VinN14) + VinN14
	PKN7 4-0 = 10010	((47R - 18R) / 48R) * (VinN11 - VinN14) + VinN14
	PKN7 4-0 = 10011	((47R - 19R) / 48R) * (VinN11 - VinN14) + VinN14
	PKN7 4-0 = 10100	((47R - 20R) / 48R) * (VinN11 - VinN14) + VinN14
	PKN7 4-0 = 10101	((47R - 21R) / 48R) * (VinN11 - VinN14) + VinN14
	PKN7 4-0 = 10110	((47R - 22R) / 48R) * (VinN11 - VinN14) + VinN14
	PKN7 4-0 = 10111	((47R - 23R) / 48R) * (VinN11 - VinN14) + VinN14
	PKN7 4-0 = 11000	((47R - 24R) / 48R) * (VinN11 - VinN14) + VinN14
	PKN7 4-0 = 11001	((47R - 25R) / 48R) * (VinN11 - VinN14) + VinN14
	PKN7 4-0 = 11010	((47R - 26R) / 48R) * (VinN11 - VinN14) + VinN14
	PKN7 4-0 = 11011	((47R - 27R) / 48R) * (VinN11 - VinN14) + VinN14
	PKN7 4-0 = 11100	((47R - 28R) / 48R) * (VinN11 - VinN14) + VinN14
	PKN7 4-0 = 11101	((47R - 29R) / 48R) * (VinN11 - VinN14) + VinN14
	PKN7 4-0 = 11110	((47R - 30R) / 48R) * (VinN11 - VinN14) + VinN14
	PKN7 4-0 = 11111	((47R - 31R) / 48R) * (VinN11 - VinN14) + VinN14

Table 5.36 VinN 12

Reference Voltage	Macro Adjustment Value	VinN13 Formula
VinN13	PKN8 4-0 = 00000	(32R / 48R) * (VinN11 - VinN14) + VinN14
	PKN8 4-0 = 00001	((32R - 1R) / 48R) * (VinN11 - VinN14) + VinN14
	PKN8 4-0 = 00010	((32R - 2R) / 48R) * (VinN11 - VinN14) + VinN14
	PKN8 4-0 = 00011	((32R - 3R) / 48R) * (VinN11 - VinN14) + VinN14
	PKN8 4-0 = 00100	((32R - 4R) / 48R) * (VinN11 - VinN14) + VinN14
	PKN8 4-0 = 00101	((32R - 5R) / 48R) * (VinN11 - VinN14) + VinN14
	PKN8 4-0 = 00110	((32R - 6R) / 48R) * (VinN11 - VinN14) + VinN14
	PKN8 4-0 = 00111	((32R - 7R) / 48R) * (VinN11 - VinN14) + VinN14
	PKN8 4-0 = 01000	((32R - 8R) / 48R) * (VinN11 - VinN14) + VinN14
	PKN8 4-0 = 01001	((32R - 9R) / 48R) * (VinN11 - VinN14) + VinN14
	PKN8 4-0 = 01010	((32R - 10R) / 48R) * (VinN11 - VinN14) + VinN14
	PKN8 4-0 = 01011	((32R - 11R) / 48R) * (VinN11 - VinN14) + VinN14
	PKN8 4-0 = 01100	((32R - 12R) / 48R) * (VinN11 - VinN14) + VinN14
	PKN8 4-0 = 01101	((32R - 13R) / 48R) * (VinN11 - VinN14) + VinN14
	PKN8 4-0 = 01110	((32R - 14R) / 48R) * (VinN11 - VinN14) + VinN14
	PKN8 4-0 = 01111	((32R - 15R) / 48R) * (VinN11 - VinN14) + VinN14
	PKN8 4-0 = 10000	((32R - 16R) / 48R) * (VinN11 - VinN14) + VinN14
	PKN8 4-0 = 10001	((32R - 17R) / 48R) * (VinN11 - VinN14) + VinN14
	PKN8 4-0 = 10010	((32R - 18R) / 48R) * (VinN11 - VinN14) + VinN14
	PKN8 4-0 = 10011	((32R - 19R) / 48R) * (VinN11 - VinN14) + VinN14
	PKN8 4-0 = 10100	((32R - 20R) / 48R) * (VinN11 - VinN14) + VinN14
	PKN8 4-0 = 10101	((32R - 21R) / 48R) * (VinN11 - VinN14) + VinN14
	PKN8 4-0 = 10110	((32R - 22R) / 48R) * (VinN11 - VinN14) + VinN14
	PKN8 4-0 = 10111	((32R - 23R) / 48R) * (VinN11 - VinN14) + VinN14
	PKN8 4-0 = 11000	((32R - 24R) / 48R) * (VinN11 - VinN14) + VinN14
	PKN8 4-0 = 11001	((32R - 25R) / 48R) * (VinN11 - VinN14) + VinN14
	PKN8 4-0 = 11010	((32R - 26R) / 48R) * (VinN11 - VinN14) + VinN14
	PKN8 4-0 = 11011	((32R - 27R) / 48R) * (VinN11 - VinN14) + VinN14
	PKN8 4-0 = 11100	((32R - 28R) / 48R) * (VinN11 - VinN14) + VinN14
	PKN8 4-0 = 11101	((32R - 29R) / 48R) * (VinN11 - VinN14) + VinN14
	PKN8 4-0 = 11110	((32R - 30R) / 48R) * (VinN11 - VinN14) + VinN14
	PKN8 4-0 = 11111	((32R - 31R) / 48R) * (VinN11 - VinN14) + VinN14

Table 5.37 VinP/N 13

Himax Confidential
Do Not Copy

Grayscale Voltage	Formula
V0	VinP0
V1	VinP1
V2	VinP2
V3	VinP3
V4	CGMP0=0 = VinP3 - (VinP3 - VinP4)*(1R/4R) CGMP0=1 = VinP3 - (VinP3 - VinP4)*(3R/9.5R) CGMP0=2 = VinP3 - (VinP3 - VinP4)*(3.5R/9.3R) CGMP0=3 = VinP3 - (VinP3 - VinP4)*(3.5R/10R)
V5	CGMP0=0 = VinP3 - (VinP3 - VinP4)*(2R/4R) CGMP0=1 = VinP3 - (VinP3 - VinP4)*(5.5R/9.5R) CGMP0=2 = VinP3 - (VinP3 - VinP4)*(6R/9.3R) CGMP0=3 = VinP3 - (VinP3 - VinP4)*(6R/10R)
V6	CGMP0=0 = VinP3 - (VinP3 - VinP4)*(3R/4R) CGMP0=1 = VinP3 - (VinP3 - VinP4)*(7.5R/9.5R) CGMP0=2 = VinP3 - (VinP3 - VinP4)*(7.8R/9.3R) CGMP0=3= VinP3 - (VinP3 - VinP4)*(8R/10R)
V7	VinP4
V8	CGMP2=0 = VinP4 - (VinP4 - VinP5)*(1R/6R) CGMP2=1 = VinP4 - (VinP4 - VinP5)*(3R/16R) CGMP2=2 = VinP4 - (VinP4 - VinP5)*(4R/18R) CGMP2=3 = VinP4 - (VinP4 - VinP5)*(4.5R/19.5R)
V9	CGMP2=0 = VinP4 - (VinP4 - VinP5)*(2R/6R) CGMP2=1 = VinP4 - (VinP4 - VinP5)*(6R/16R) CGMP2=2 = VinP4 - (VinP4 - VinP5)*(7R/18R) CGMP2=3 = VinP4 - (VinP4 - VinP5)*(8.5R/19.5R)
V10	CGMP2=0 = VinP4 - (VinP4 - VinP5)*(3R/6R) CGMP2=1 = VinP4 - (VinP4 - VinP5)*(8.5R/16R) CGMP2=2 = VinP4 - (VinP4 - VinP5)*(10R/18R) CGMP2=3 = VinP4 - (VinP4 - VinP5)*(11.5R/19.5R)
V11	CGMP2=0 = VinP4 - (VinP4 - VinP5)*(4R/6R) CGMP2=1 = VinP4 - (VinP4 - VinP5)*(11R/16R) CGMP2=2 = VinP4 - (VinP4 - VinP5)*(13R/18R) CGMP2=3 = VinP4 - (VinP4 - VinP5)*(14.5R/19.5R)
V12	CGMP2=0 = VinP4 - (VinP4 - VinP5)*(5R/6R) CGMP2=1 = VinP4 - (VinP4 - VinP5)*(13.5R/16R) CGMP2=2 = VinP4 - (VinP4 - VinP5)*(15.5R/18R) CGMP2=3 = VinP4 - (VinP4 - VinP5)*(17R/19.5R)
V13	VinP5
V14	CGMP4=0 =VinP5 - (VinP5 - VinP6)*(1R/6R) CGMP4=1 =VinP5 - (VinP5 - VinP6)*(1.5R/6.5R)
V15	CGMP4=0 =VinP5 - (VinP5 - VinP6)*(2R/6R) CGMP4=1 =VinP5 - (VinP5 - VinP6)*(2.5R/6.5R)

Grayscale Voltage	Formula
V16	CGMP4=0 =VinP5 - (VinP5 - VinP6)*(3R/6R) CGMP4=1 =VinP5 - (VinP5 - VinP6)*(3.5R/6.5R)
V17	CGMP4=0 =VinP5 - (VinP5 - VinP6)*(4R/6R) CGMP4=1 =VinP5 - (VinP5 - VinP6)*(4.5R/6.5R)
V18	CGMP4=0 =VinP5 - (VinP5 - VinP6)*(5R/6R) CGMP4=1 =VinP5 - (VinP5 - VinP6)*(5.5R/6.5R)
V19	VinP6
V20	VinP6 - (VinP6 - VinP7)*(1R/6R)
V21	VinP6 - (VinP6 - VinP7)*(2R/6R)
V22	VinP6 - (VinP6 - VinP7)*(3R/6R)
V23	VinP6 - (VinP6 - VinP7)*(4R/6R)
V24	VinP6 - (VinP6 - VinP7)*(5R/6R)
V25	VinP7
V26	VinP7 - (VinP7 - VinP8)*(1R/7.5R)
V27	VinP7 - (VinP7 - VinP8)*(2R/7.5R)
V28	VinP7 - (VinP7 - VinP8)*(3R/7.5R)
V29	VinP7 - (VinP7 - VinP8)*(4R/7.5R)
V30	VinP7 - (VinP7 - VinP8)*(5R/7.5R)
V31	VinP7 - (VinP7 - VinP8)*(6R/7.5R)
V32	VinP8
V33	VinP8 - (VinP8 - VinP9)*(1R/6R)
V34	VinP8 - (VinP8 - VinP9)*(2R/6R)
V35	VinP8 - (VinP8 - VinP9)*(3R/6R)
V36	VinP8 - (VinP8 - VinP9)*(4R/6R)
V37	VinP8 - (VinP8 - VinP9)*(5R/6R)
V38	VinP9
V39	VinP9 - (VinP9 - VinP10)*(1R/6R)
V40	VinP9 - (VinP9 - VinP10)*(2R/6R)
V41	VinP9 - (VinP9 - VinP10)*(3R/6R)
V42	VinP9 - (VinP9 - VinP10)*(4R/6R)
V43	VinP9 - (VinP9 - VinP10)*(5R/6R)
V44	VinP10
V45	CGMP5=0 =VinP10 - (VinP10 - VinP11)*(1R/6R) CGMP5=1 =VinP10 - (VinP10 - VinP11)*(1R/6.5R)
V46	CGMP5=0 =VinP10 - (VinP10 - VinP11)*(2R/6R) CGMP5=1 =VinP10 - (VinP10 - VinP11)*(2R/6.5R)
V47	CGMP5=0 =VinP10 - (VinP10 - VinP11)*(3R/6R) CGMP5=1 =VinP10 - (VinP10 - VinP11)*(3R/6.5R)
V48	CGMP5=0 =VinP10 - (VinP10 - VinP11)*(4R/6R) CGMP5=1 =VinP10 - (VinP10 - VinP11)*(4R/6.5R)
V49	CGMP5=0 =VinP10 - (VinP10 - VinP11)*(5R/6R) CGMP5=1 =VinP10 - (VinP10 - VinP11)*(5R/6.5R)

Himax Confidential
Do Not Copy

Grayscale Voltage	Formula
V50	VinP11
V51	CGMP3=0 = VinP11 - (VinP11 - VinP12)*(1R/6R) CGMP3=1 = VinP11 - (VinP11 - VinP12)*(2.5R/16R) CGMP3=2 = VinP11 - (VinP11 - VinP12)*(2.5R/18R) CGMP3=3 = VinP11 - (VinP11 - VinP12)* (2.5R/19.5R)
V52	CGMP3=0 = VinP11 - (VinP11- VinP12)*(2R/6R) CGMP3=1 = VinP11 - (VinP11 - VinP12)*(5R/16R) CGMP3=2 = VinP11 - (VinP11 - VinP12)*(5R/18R) CGMP3=3 = VinP11 - (VinP11 - VinP12)*(5R/19.5R)
V53	CGMP3=0 = VinP11 - (VinP11 - VinP12)*(3R/6R) CGMP3=1 = VinP11 - (VinP11 - VinP12)*(7.5R/16R) CGMP3=2 = VinP11 - (VinP11 - VinP12)*(8R/18R) CGMP3=3 = VinP11 - (VinP11 - VinP12)*(8R/19.5R)
V54	CGMP3=0 = VinP11 - (VinP11 - VinP12)*(4R/6R) CGMP3=1 = VinP11 - (VinP11 - VinP12)*(10R/16R) CGMP3=2 = VinP11 - (VinP11 - VinP12)*(11R/18R) CGMP3=3 = VinP11 - (VinP11 - VinP12)* (11R/19.5R)
V55	CGMP3=0 = VinP11 - (VinP11- VinP12)*(5R/6R) CGMP3=1 = VinP11 - (VinP11 - VinP12)*(13R/16R) CGMP3=2 = VinP11 - (VinP11 - VinP12)*(14R/18R) CGMP3=3 = VinP11 - (VinP11 - VinP12)* (15R/19.5R)

Grayscale Voltage	Formula
V56	VinP12
V57	CGMP1=0 = VinP12 - (VinP12 – VinP13)*(1R/4R) CGMP1=1 = VinP12 - (VinP12 – VinP13)*(2R/9.5R) CGMP1=2 = VinP12 - (VinP12 – VinP13)*(1.5R/9.3R) CGMP1=3 = VinP12 - (VinP12 – VinP13)*(2R/10R)
V58	CGMP1=0 = VinP12 - (VinP12 – VinP13)*(2R/4R) CGMP1=1 = VinP12 - (VinP12 – VinP13)*(4R/9.5R) CGMP1=2 = VinP12 - (VinP12 – VinP13)*(3.3R/9.3R) CGMP1=3 = VinP12 - (VinP12 – VinP13)*(4R/10R)
V59	CGMP1=0 = VinP12 - (VinP12 – VinP13)*(3R/4R) CGMP1=1 = VinP12 - (VinP12 – VinP13)*(6.5R/9.5R) CGMP1=2 = VinP12 - (VinP12 – VinP13)*(5.8R/9.3R) CGMP1=3= VinP12 - (VinP12 – VinP13)*(6.5R/10R)
V60	VinP13
V61	VinP14
V62	VinP15
V63	VinP16

Table 5.38 Voltage Calculation Formula of 64-Grayscale Voltage (Positive Polarity)

Himax Confidential
Do Not Copy

Grayscale Voltage	Formula
V0	VinN0
V1	VinN1
V2	VinN2
V3	VinN3
V4	CGMN0=0 = VinN3 - (VinN3 - VinN4)*(1R/4R) CGMN0=1 = VinN3 - (VinN3 - VinN4)*(3R/9.5R) CGMN0=2 = VinN3 - (VinN3 - VinN4)*(3.5R/9.3R) CGMN0=3 = VinN3 - (VinN3 - VinN4)*(3.5R/10R)
V5	CGMN0=0 = VinN3 - (VinN3 - VinN4)*(2R/4R) CGMN0=1 = VinN3 - (VinN3 - VinN4)*(5.5R/9.5R) CGMN0=2 = VinN3 - (VinN3 - VinN4)*(6R/9.3R) CGMN0=3 = VinN3 - (VinN3 - VinN4)*(6R/10R)
V6	CGMN0=0 = VinN3 - (VinN3 - VinN4)*(3R/4R) CGMN0=1 = VinN3 - (VinN3 - VinN4)*(7.5R/9.5R) CGMN0=2 = VinN3 - (VinN3 - VinN4)*(7.8R/9.3R) CGMN0=3= VinN3 - (VinN3 - VinN4)*(8R/10R)
V7	VinN4
V8	CGMN2=0 = VinN4 - (VinN4 - VinN5)*(1R/6R) CGMN2=1 = VinN4 - (VinN4 - VinN5)*(3R/16R) CGMN2=2 = VinN4 - (VinN4 - VinN5)*(4R/18R) CGMN2=3 = VinN4 - (VinN4 - VinN5)*(4.5R/19.5R)
V9	CGMN2=0 = VinN4 - (VinN4 - VinN5)*(2R/6R) CGMN2=1 = VinN4 - (VinN4 - VinN5)*(6R/16R) CGMN2=2 = VinN4 - (VinN4 - VinN5)*(7R/18R) CGMN2=3 = VinN4 - (VinN4 - VinN5)*(8.5R/19.5R)
V10	CGMN2=0 = VinN4 - (VinN4 - VinN5)*(3R/6R) CGMN2=1 = VinN4 - (VinN4 - VinN5)*(8.5R/16R) CGMN2=2 = VinN4 - (VinN4 - VinN5)*(10R/18R) CGMN2=3 = VinN4 - (VinN4 - VinN5)*(11.5R/19.5R)
V11	CGMN2=0 = VinN4 - (VinN4 - VinN5)*(4R/6R) CGMN2=1 = VinN4 - (VinN4 - VinN5)*(11R/16R) CGMN2=2 = VinN4 - (VinN4 - VinN5)*(13R/18R) CGMN2=3 = VinN4 - (VinN4 - VinN5)*(14.5R/19.5R)
V12	CGMN2=0 = VinN4 - (VinN4 - VinN5)*(5R/6R) CGMN2=1 = VinN4 - (VinN4 - VinN5)*(13.5R/16R) CGMN2=2 = VinN4 - (VinN4 - VinN5)*(15.5R/18R) CGMN2=3 = VinN4 - (VinN4 - VinN5)*(17R/19.5R)
V13	VinN5
V14	CGMN4=0 =VinN5 - (VinN5 - VinN6)*(1R/6R) CGMN4=1 =VinN5 - (VinN5 - VinN6)*(1.5R/6.5R)
V15	CGMN4=0 =VinN5 - (VinN5 - VinN6)*(2R/6R) CGMN4=1 =VinN5 - (VinN5 - VinN6)*(2.5R/6.5R)

Grayscale Voltage	Formula
V16	CGMN4=0 =VinN5 - (VinN5 - VinN6)*(3R/6R) CGMN4=1 =VinN5 - (VinN5 - VinN6)*(3.5R/6.5R)
V17	CGMN4=0 =VinN5 - (VinN5 - VinN6)*(4R/6R) CGMN4=1 =VinN5 - (VinN5 - VinN6)*(4.5R/6.5R)
V18	CGMN4=0 =VinN5 - (VinN5 - VinN6)*(5R/6R) CGMN4=1 =VinN5 - (VinN5 - VinN6)*(5.5R/6.5R)
V19	VinN6
V20	VinN6 - (VinN6 - VinN7)*(1R/6R)
V21	VinN6 - (VinN6 - VinN7)*(2R/6R)
V22	VinN6 - (VinN6 - VinN7)*(3R/6R)
V23	VinN6 - (VinN6 - VinN7)*(4R/6R)
V24	VinN6 - (VinN6 - VinN7)*(5R/6R)
V25	VinP7
V26	VinP7 - (VinP7 - VinP8)*(1R/7.5R)
V27	VinP7 - (VinP7 - VinP8)*(2R/7.5R)
V28	VinP7 - (VinP7 - VinP8)*(3R/7.5R)
V29	VinP7 - (VinP7 - VinP8)*(4R/7.5R)
V30	VinP7 - (VinP7 - VinP8)*(5R/7.5R)
V31	VinP7 - (VinP7 - VinP8)*(6R/7.5R)
V32	VinP8
V33	VinP8 - (VinP8 - VinP9)*(1R/6R)
V34	VinP8 - (VinP8 - VinP9)*(2R/6R)
V35	VinP8 - (VinP8 - VinP9)*(3R/6R)
V36	VinP8 - (VinP8 - VinP9)*(4R/6R)
V37	VinP8 - (VinP8 - VinP9)*(5R/6R)
V38	VinN9
V39	VinN9 - (VinN9 - VinN10)*(1R/6R)
V40	VinN9 - (VinN9 - VinN10)*(2R/6R)
V41	VinN9 - (VinN9 - VinN10)*(3R/6R)
V42	VinN9 - (VinN9 - VinN10)*(4R/6R)
V43	VinN9 - (VinN9 - VinN10)*(5R/6R)
V44	VinN10
V45	CGMN5=0 =VinN10 - (VinN10 - VinN11)*(1R/6R) CGMN5=1 =VinN10 - (VinN10 - VinN11)*(1R/6.5R)
V46	CGMN5=0 =VinN10 - (VinN10 - VinN11)*(2R/6R) CGMN5=1 =VinN10 - (VinN10 - VinN11)*(2R/6.5R)
V47	CGMN5=0 =VinN10 - (VinN10 - VinN11)*(3R/6R) CGMN5=1 =VinN10 - (VinN10 - VinN11)*(3R/6.5R)
V48	CGMN5=0 =VinN10 - (VinN10 - VinN11)*(4R/6R) CGMN5=1 =VinN10 - (VinN10 - VinN11)*(4R/6.5R)
V49	CGMN5=0 =VinN10 - (VinN10 - VinN11)*(5R/6R) CGMN5=1 =VinN10 - (VinN10 - VinN11)*(5R/6.5R)

Himax Confidential
Do Not Copy

This information contained herein is the exclusive property of Himax and shall not be distributed, reproduced, or disclosed in whole or in part without prior written permission of Himax.

Grayscale Voltage	Formula
V50	VinN11
V51	CGMN3=0 = VinN11 - (VinN11 - VinN12)*(1R/6R) CGMN3=1 = VinN11 - (VinN11 - VinN12)*(2.5R/16R) CGMN3=2 = VinN11 - (VinN11 - VinN12)*(2.5R/18R) CGMN3=3 = VinN11 - (VinN11 - VinN12)*(2.5R/19.5R)
V52	CGMN3=0 = VinN11 - (VinN11- VinN12)*(2R/6R) CGMN3=1 = VinN11 - (VinN11 - VinN12)*(5R/16R) CGMN3=2 = VinN11 - (VinN11 - VinN12)*(5R/18R) CGMN3=3 = VinN11 - (VinN11 - VinN12)*(5R/19.5R)
V53	CGMN3=0 = VinN11 - (VinN11 - VinN12)*(3R/6R) CGMN3=1 = VinN11 - (VinN11 - VinN12)*(7.5R/16R) CGMN3=2 = VinN11 - (VinN11 - VinN12)*(8R/18R) CGMN3=3 = VinN11 - (VinN11 - VinN12)*(8R/19.5R)
V54	CGMN3=0 = VinN11 - (VinN11 - VinN12)*(4R/6R) CGMN3=1 = VinN11 - (VinN11 - VinN12)*(10R/16R) CGMN3=2 = VinN11 - (VinN11 - VinN12)*(11R/18R) CGMN3=3 = VinN11 - (VinN11 - VinN12)*(11R/19.5R)
V55	CGMN3=0 = VinN11 - (VinN11- VinN12)*(5R/6R) CGMN3=1 = VinN11 - (VinN11 - VinN12)*(13R/16R) CGMN3=2 = VinN11 - (VinN11 - VinN12)*(14R/18R) CGMN3=3 = VinN11 - (VinN11 - VinN12)*(15R/19.5R)

Grayscale Voltage	Formula
V56	VinN12
V57	CGMN1=0 = VinN12 - (VinN12 – VinN13)*(1R/4R) CGMN1=1 = VinN12 - (VinN12 – VinN13)*(2R/9.5R) CGMN1=2 = VinN12 - (VinN12 – VinN13)*(1.5R/9.3R) CGMN1=3 = VinN12 - (VinN12 – VinN13)*(2R/10R)
V58	CGMN1=0 = VinN12 - (VinN12 – VinN13)*(2R/4R) CGMN1=1 = VinN12 - (VinN12 – VinN13)*(4R/9.5R) CGMN1=2 = VinN12 - (VinN12 – VinN13)*(3.3R/9.3R) CGMN1=3 = VinN12 - (VinN12 – VinN13)*(4R/10R)
V59	CGMN1=0 = VinN12 - (VinN12 – VinN13)*(3R/4R) CGMN1=1 = VinN12 - (VinN12 – VinN13)*(6.5R/9.5R) CGMN1=2 = VinN12 - (VinN12 – VinN13)*(5.8R/9.3R) CGMN1=3= VinN12 - (VinN12 – VinN13)*(6.5R/10R)
V60	VinN13
V61	VinN14
V62	VinN15
V63	VinN16

Table 5.39 Voltage Calculation Formula of 64-Grayscale Voltage (Negative Polarity)

Himax Confidential
This information contained herein is the exclusive property of Himax and shall not be distributed, reproduced, or disclosed in whole or in part without prior written permission of Himax.

Grayscale Voltage	Formula
VV0	V0
VV1	V0 - (V0 - V1)*(4R/16R)
VV2	V0 - (V0 - V1)*(8R/16R)
VV3	V0 - (V0 - V1)*(12R/16R)
VV4	V1
VV5	V1 - (V1 - V2)*(4R/16R)
VV6	V1 - (V1 - V2)*(8R/16R)
VV7	V1 - (V1 - V2)*(12R/16R)
VV8	V2
VV9	V2 - (V2 - V3)*(4R/16R)
VV10	V2 - (V2 - V3)*(8R/16R)
VV11	V2 - (V2 - V3)*(12R/16R)
VV12	V3
VV13	V3 - (V3 - V4)*(2R/8R)
VV14	V3 - (V3 - V4)*(4R/8R)
VV15	V3 - (V3 - V4)*(6R/8R)
VV16	V4
VV17	V4 - (V4 - V5)*(2R/8R)
VV18	V4 - (V4 - V5)*(4R/8R)
VV19	V4 - (V4 - V5)*(6R/8R)
VV20	V5
VV21	V5 - (V5 - V6)*(2R/8R)
VV22	V5 - (V5 - V6)*(4R/8R)
VV23	V5 - (V5 - V6)*(6R/8R)
VV24	V6
VV25	V6 - (V6 - V7)*(2R/8R)
VV26	V6 - (V6 - V7)*(4R/8R)
VV27	V6 - (V6 - V7)*(6R/8R)
VV28	V7
VV29	V7 - (V7 - V8)*(1.6R/6.4R)
VV30	V7 - (V7 - V8)*(3.2R/6.4R)
VV31	V7 - (V7 - V8)*(4.8R/6.4R)
VV32	V8
VV33	V8 - (V8 - V9)*(1.6R/6.4R)
VV34	V8 - (V8 - V9)*(3.2R/6.4R)
VV35	V8 - (V8 - V9)*(4.8R/6.4R)
VV36	V9
VV37	V9 - (V9 - V10)*(1.6R/6.4R)
VV38	V9 - (V9 - V10)*(3.2R/6.4R)
VV39	V9 - (V9 - V10)*(4.8R/6.4R)
VV40	V10
VV41	V10 - (V10 - V11)*(1.6R/6.4R)
VV42	V10 - (V10 - V11)*(3.2R/6.4R)
VV43	V10 - (V10 - V11)*(4.8R/6.4R)

Grayscale Voltage	Formula
VV44	V11
VV45	V11 - (V11 - V12)*(1.6R/6.4R)
VV46	V11 - (V11 - V12)*(3.2R/6.4R)
VV47	V11 - (V11 - V12)*(4.8R/6.4R)
VV48	V12
VV49	V12 - (V12 - V13)*(1.6R/6.4R)
VV50	V12 - (V12 - V13)*(3.2R/6.4R)
VV51	V12 - (V12 - V13)*(4.8R/6.4R)
VV52	V13
VV53	V13 - (V13 - V14)*(1.6R/6.4R)
VV54	V13 - (V13 - V14)*(3.2R/6.4R)
VV55	V13 - (V13 - V14)*(4.8R/6.4R)
VV56	V14
VV57	V14 - (V14 - V15)*(1.6R/6.4R)
VV58	V14 - (V14 - V15)*(3.2R/6.4R)
VV59	V14 - (V14 - V15)*(4.8R/6.4R)
VV60	V15
VV61	V15 - (V15 - V16)*(1.6R/6.4R)
VV62	V15 - (V15 - V16)*(3.2R/6.4R)
VV63	V15 - (V15 - V16)*(4.8R/6.4R)
VV64	V16
VV65	V16 - (V16 - V17)*(1.6R/6.4R)
VV66	V16 - (V16 - V17)*(3.2R/6.4R)
VV67	V16 - (V16 - V17)*(4.8R/6.4R)
VV68	V17
VV69	V17 - (V17 - V18)*(1.6R/6.4R)
VV70	V17 - (V17 - V18)*(3.2R/6.4R)
VV71	V17 - (V17 - V18)*(4.8R/6.4R)
VV72	V18
VV73	V18 - (V18 - V19)*(1.6R/6.4R)
VV74	V18 - (V18 - V19)*(3.2R/6.4R)
VV75	V18 - (V18 - V19)*(4.8R/6.4R)
VV76	V19
VV77	V19 - (V19 - V20)*(1.6R/6.4R)
VV78	V19 - (V19 - V20)*(3.2R/6.4R)
VV79	V19 - (V19 - V20)*(4.8R/6.4R)
VV80	V20
VV81	V20 - (V20 - V21)*(1.6R/6.4R)
VV82	V20 - (V20 - V21)*(3.2R/6.4R)
VV83	V20 - (V20 - V21)*(4.8R/6.4R)
VV84	V21
VV85	V21 - (V21 - V22)*(1.6R/6.4R)
VV86	V21 - (V21 - V22)*(3.2R/6.4R)
VV87	V21 - (V21 - V22)*(4.8R/6.4R)

Himax Confidential
Do Not Copy

Grayscale Voltage	Formula
VV88	V22
VV89	V22 - (V22 - V23)*(1.6R/6.4R)
VV90	V22 - (V22 - V23)*(3.2R/6.4R)
VV91	V22 - (V22 - V23)*(4.8R/6.4R)
VV92	V23
VV93	V23 - (V23 - V24)*(1.6R/6.4R)
VV94	V23 - (V23 - V24)*(3.2R/6.4R)
VV95	V23 - (V23 - V24)*(4.8R/6.4R)
VV96	V24
VV97	V24 - (V24 - V25)*(1.6R/6.4R)
VV98	V24 - (V24 - V25)*(3.2R/6.4R)
VV99	V24 - (V24 - V25)*(4.8R/6.4R)
VV100	V25
VV101	V25 - (V25 - V26)*(1.6R/6.4R)
VV102	V25 - (V25 - V26)*(3.2R/6.4R)
VV103	V25 - (V25 - V26)*(4.8R/6.4R)
VV104	V26
VV105	V26 - (V26 - V27)*(1.6R/6.4R)
VV106	V26 - (V26 - V27)*(3.2R/6.4R)
VV107	V26 - (V26 - V27)*(4.8R/6.4R)
VV108	V27
VV109	V27 - (V27 - V28)*(1.6R/6.4R)
VV110	V27 - (V27 - V28)*(3.2R/6.4R)
VV111	V27 - (V27 - V28)*(4.8R/6.4R)
VV112	V28
VV113	V28 - (V28 - V29)*(1.6R/6.4R)
VV114	V28 - (V28 - V29)*(3.2R/6.4R)
VV115	V28 - (V28 - V29)*(4.8R/6.4R)
VV116	V29
VV117	V29 - (V29 - V30)*(1.6R/6.4R)
VV118	V29 - (V29 - V30)*(3.2R/6.4R)
VV119	V29 - (V29 - V30)*(4.8R/6.4R)
VV120	V30
VV121	V30 - (V30 - V31)*(1.6R/6.4R)
VV122	V30 - (V30 - V31)*(3.2R/6.4R)
VV123	V30 - (V30 - V31)*(4.8R/6.4R)
VV124	V31
VV125	V31 - (V31 - V32)*(1.6R/11.2R)
VV126	V31 - (V31 - V32)*(3.2R/11.2R)
VV127	V31 - (V31 - V32)*(4.8R/11.2R)
VV128	V31 - (V31 - V32)*(6.4R/11.2R)
VV129	V31 - (V31 - V32)*(8R/11.2R)
VV130	V31 - (V31 - V32)*(9.6R/11.2R)
VV131	V32

Grayscale Voltage	Formula
VV132	V32 - (V32 - V33)*(1.6R/6.4R)
VV133	V32 - (V32 - V33)*(3.2R/6.4R)
VV134	V32 - (V32 - V33)*(4.8R/6.4R)
VV135	V33
VV136	V33 - (V33 - V34)*(1.6R/6.4R)
VV137	V33 - (V33 - V34)*(3.2R/6.4R)
VV138	V33 - (V33 - V34)*(4.8R/6.4R)
VV139	V34
VV140	V34 - (V34 - V35)*(1.6R/6.4R)
VV141	V34 - (V34 - V35)*(3.2R/6.4R)
VV142	V34 - (V34 - V35)*(4.8R/6.4R)
VV143	V35
VV144	V35 - (V35 - V36)*(1.6R/6.4R)
VV145	V35 - (V35 - V36)*(3.2R/6.4R)
VV146	V35 - (V35 - V36)*(4.8R/6.4R)
VV147	V36
VV148	V36 - (V36 - V37)*(1.6R/6.4R)
VV149	V36 - (V36 - V37)*(3.2R/6.4R)
VV150	V36 - (V36 - V37)*(4.8R/6.4R)
VV151	V37
VV152	V37 - (V37 - V38)*(1.6R/6.4R)
VV153	V37 - (V37 - V38)*(3.2R/6.4R)
VV154	V37 - (V37 - V38)*(4.8R/6.4R)
VV155	V38
VV156	V38 - (V38 - V39)*(1.6R/6.4R)
VV157	V38 - (V38 - V39)*(3.2R/6.4R)
VV158	V38 - (V38 - V39)*(4.8R/6.4R)
VV159	V39
VV160	V39 - (V39 - V40)*(1.6R/6.4R)
VV161	V39 - (V39 - V40)*(3.2R/6.4R)
VV162	V39 - (V39 - V40)*(4.8R/6.4R)
VV163	V40
VV164	V40 - (V40 - V41)*(1.6R/6.4R)
VV165	V40 - (V40 - V41)*(3.2R/6.4R)
VV166	V40 - (V40 - V41)*(4.8R/6.4R)
VV167	V41
VV168	V41 - (V41 - V42)*(1.6R/6.4R)
VV169	V41 - (V41 - V42)*(3.2R/6.4R)
VV170	V41 - (V41 - V42)*(4.8R/6.4R)
VV171	V42
VV172	V42 - (V42 - V43)*(1.6R/6.4R)
VV173	V42 - (V42 - V43)*(3.2R/6.4R)
VV174	V42 - (V42 - V43)*(4.8R/6.4R)
VV175	V43

Himax Confidential
Do Not Copy

Grayscale Voltage	Formula
VV176	V43 - (V43 - V44)*(1.6R/6.4R)
VV177	V43 - (V43 - V44)*(3.2R/6.4R)
VV178	V43 - (V43 - V44)*(4.8R/6.4R)
VV179	V44
VV180	V44 - (V44 - V45)*(1.6R/6.4R)
VV181	V44 - (V44 - V45)*(3.2R/6.4R)
VV182	V44 - (V44 - V45)*(4.8R/6.4R)
VV183	V45
VV184	V45 - (V45 - V46)*(1.6R/6.4R)
VV185	V45 - (V45 - V46)*(3.2R/6.4R)
VV186	V45 - (V45 - V46)*(4.8R/6.4R)
VV187	V46
VV188	V46 - (V46 - V47)*(1.6R/6.4R)
VV189	V46 - (V46 - V47)*(3.2R/6.4R)
VV190	V46 - (V46 - V47)*(4.8R/6.4R)
VV191	V47
VV192	V47 - (V47 - V48)*(1.6R/6.4R)
VV193	V47 - (V47 - V48)*(3.2R/6.4R)
VV194	V47 - (V47 - V48)*(4.8R/6.4R)
VV195	V48
VV196	V48 - (V48 - V49)*(1.6R/6.4R)
VV197	V48 - (V48 - V49)*(3.2R/6.4R)
VV198	V48 - (V48 - V49)*(4.8R/6.4R)
VV199	V49
VV200	V49 - (V49 - V50)*(1.6R/6.4R)
VV201	V49 - (V49 - V50)*(3.2R/6.4R)
VV202	V49 - (V49 - V50)*(4.8R/6.4R)
VV203	V50
VV204	V50 - (V50 - V51)*(1.6R/6.4R)
VV205	V50 - (V50 - V51)*(3.2R/6.4R)
VV206	V50 - (V50 - V51)*(4.8R/6.4R)
VV207	V51
VV208	V51 - (V51 - V52)*(1.6R/6.4R)
VV209	V51 - (V51 - V52)*(3.2R/6.4R)
VV210	V51 - (V51 - V52)*(4.8R/6.4R)
VV211	V52
VV212	V52 - (V52 - V53)*(1.6R/6.4R)
VV213	V52 - (V52 - V53)*(3.2R/6.4R)
VV214	V52 - (V52 - V53)*(4.8R/6.4R)
VV215	V53

Grayscale Voltage	Formula
VV216	V53 - (V53 - V54)*(1.6R/6.4R)
VV217	V53 - (V53 - V54)*(3.2R/6.4R)
VV218	V53 - (V53 - V54)*(4.8R/6.4R)
VV219	V54
VV220	V54 - (V54 - V55)*(1.6R/6.4R)
VV221	V54 - (V54 - V55)*(3.2R/6.4R)
VV222	V54 - (V54 - V55)*(4.8R/6.4R)
VV223	V55
VV224	V55 - (V55 - V56)*(1.6R/6.4R)
VV225	V55 - (V55 - V56)*(3.2R/6.4R)
VV226	V55 - (V55 - V56)*(4.8R/6.4R)
VV227	V56
VV228	V56 - (V56 - V57)*(2R/8R)
VV229	V56 - (V56 - V57)*(4R/8R)
VV230	V56 - (V56 - V57)*(6R/8R)
VV231	V57
VV232	V57 - (V57 - V58)*(2R/8R)
VV233	V57 - (V57 - V58)*(4R/8R)
VV234	V57 - (V57 - V58)*(6R/8R)
VV235	V58
VV236	V58 - (V58 - V59)*(2R/8R)
VV237	V58 - (V58 - V59)*(4R/8R)
VV238	V58 - (V58 - V59)*(6R/8R)
VV239	V59
VV240	V59 - (V59 - V60)*(2R/8R)
VV241	V59 - (V59 - V60)*(4R/8R)
VV242	V59 - (V59 - V60)*(6R/8R)
VV243	V60
VV244	V60 - (V60 - V61)*(4R/16R)
VV245	V60 - (V60 - V61)*(8R/16R)
VV246	V60 - (V60 - V61)*(12R/16R)
VV247	V61
VV248	V61 - (V61 - V62)*(4R/16R)
VV249	V61 - (V61 - V62)*(8R/16R)
VV250	V61 - (V61 - V62)*(12R/16R)
VV251	V62
VV252	V62 - (V62 - V63)*(4R/16R)
VV253	V62 - (V62 - V63)*(8R/16R)
VV254	V62 - (V62 - V63)*(12R/16R)
VV255	V63

Table 5.40 Voltage Calculation Formula of 256-Grayscale Voltage (Positive/Negative Polarity)

Himax Confidential
Do Not Copy

5.3 Gamma curve

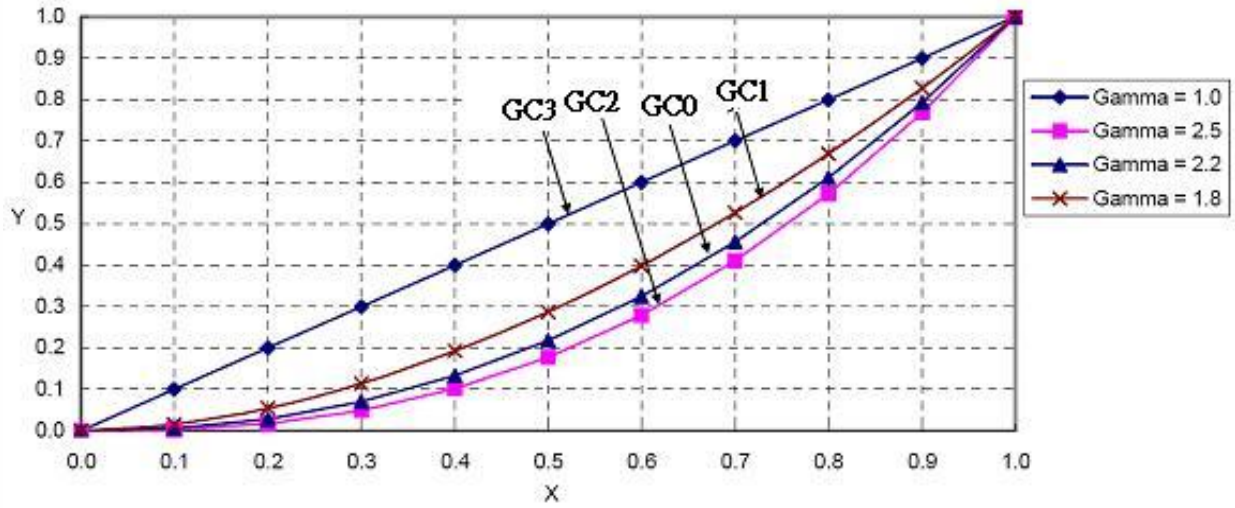

Figure 5.5 Gamma Curve according to the GC0 to GC3 Bit

Himax Confidential
Do Not Copy

This information contained herein is the exclusive property of Himax and shall not be distributed, reproduced, or disclosed in whole or in part without prior written permission of Himax.

5.4 Oscillator

The HX83xx-A can oscillate an internal R-C oscillator with an internal oscillation resistor(Rf). The oscillation frequency is changed according to the internal register. The default frequency is 5.5 MHz. The tolerance of internal oscillator frequency is ±10 %.

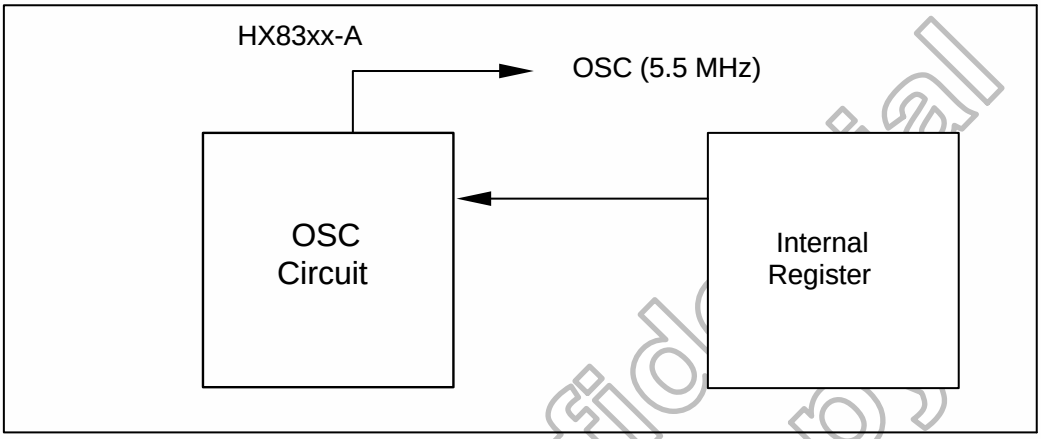

Figure 5.6 Oscillation Circuit

Himax Confidential
Do Not Copy

This information contained herein is the exclusive property of Himax and shall not be distributed, reproduced, or disclosed in whole or in part without prior written permission of Himax.

5.5 LCD Power Generation Scheme

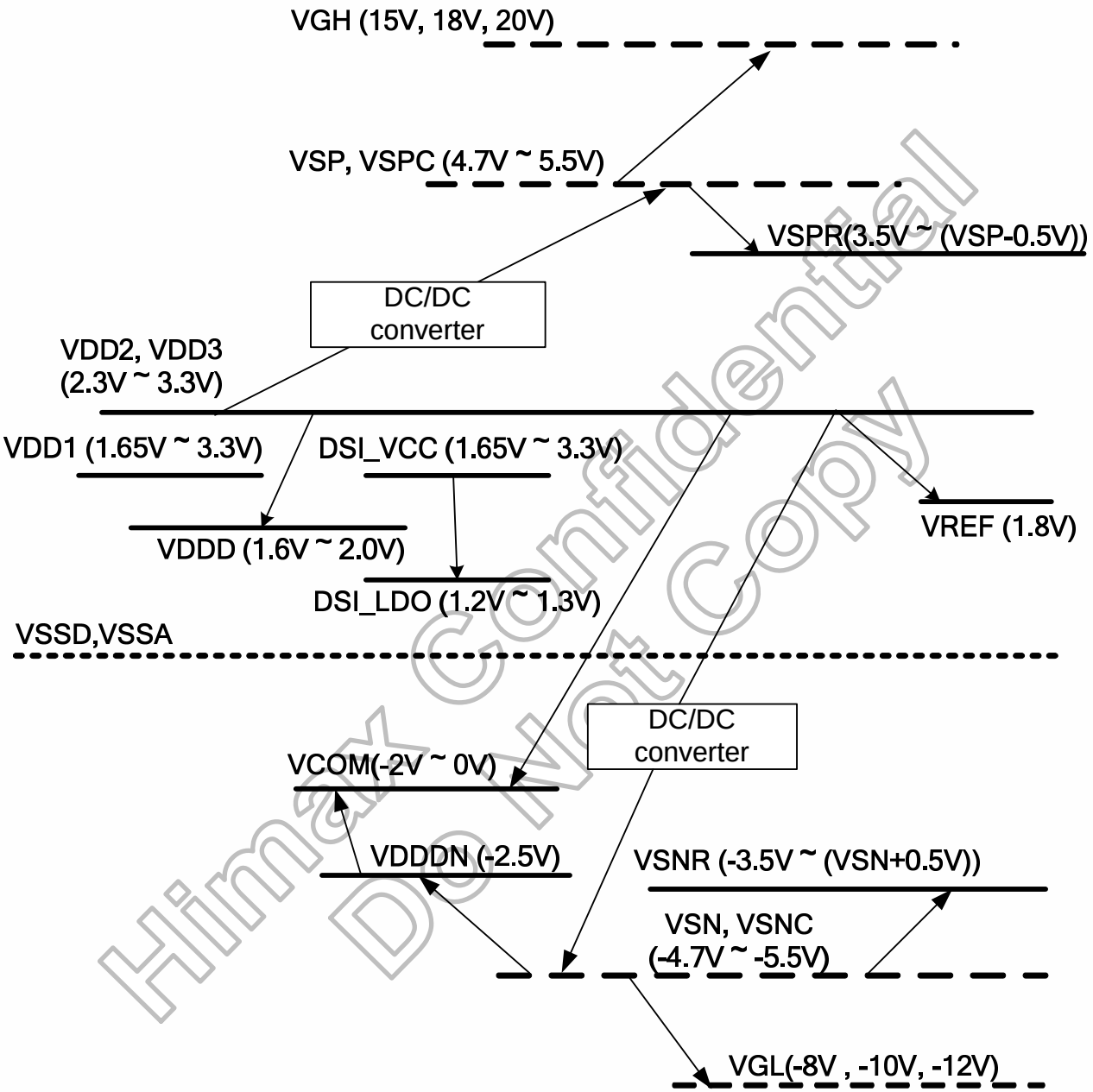

Figure 5.7 LCD Power Generation Scheme

Himax Confidential
Do Not Copy

This information contained herein is the exclusive property of Himax and shall not be distributed, reproduced, or disclosed in whole or in part without prior written permission of Himax.

5.6 DC/DC Converter Circuit

5.6.1 Use PFM DC/DC Converter

The PFM DC-DC converter generates the high voltage level VSP/VSN required for source drivers. HX83xx-A contains sub-circuits of the PFM boost converter, including a precision 1.8V reference voltage, comparator, PFM controlling logic, and the output buffer. The boost converter uses a external power transistor to provide maximum efficiency and to minimize the number of external components. The output voltage of the boost converter can be set from 4.7 to 5.5 (VSP) and -4.7 to -5.5V (VSN)

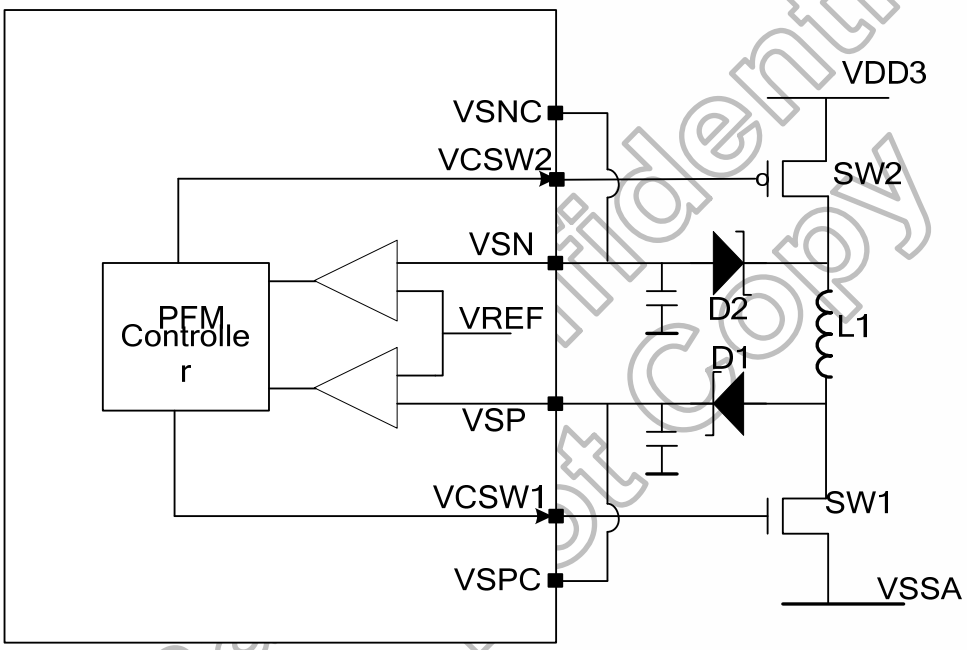

Figure 5.8 DC/DC Converter Circuit (PFM)

Himax Confidential
Do not Copy

5.7 Characteristics of I/O

5.7.1 Output or Bi-directional (I/O) Pins

Output or Bi-directional pins	After Power On	After Hardware Reset	After Software Reset
DB23 to DB0 (Output driver)	High-Z (Inactive)	High-Z (Inactive)	High-Z (Inactive)
SDO	High-Z (Inactive)	High-Z (Inactive)	High-Z (Inactive)

Note: There will be no output from DB[23...0] during Power On/Off sequencies, Hardware Reset and Software Reset.

Table 5.41 Characteristics of Output or Bi-directional (I/O) Pins

5.7.2 Input Pins

Input pins	During Power On Process	After Power On	After Hardware Reset	After Software Reset	During Power Off Process
NRESET	Section 5.18	Input valid	Input valid	Input valid	Section 5.18
NCS	Input valid	Input valid	Input valid	Input valid	Input valid
DB23 to DB0	Input valid	Input valid	Input valid	Input valid	Input valid
OSC	Input valid	Input valid	Input valid	Input valid	Input valid
TEST2-0	Low	Low	Low	TEST1	Low
HSYNC	Input valid	Input valid	Input valid	Input valid	Input valid
VSYNC	Input valid	Input valid	Input valid	Input valid	Input valid
ENABLE	Input valid	Input valid	Input valid	Input valid	Input valid
DCK	Input valid	Input valid	Input valid	Input valid	Input valid
SDI, SCL	Input valid	Input valid	Input valid	Input valid	Input valid

Table 5.42 Characteristics of Input Pins

Himax Confidential
Do Not Copy

This information contained herein is the exclusive property of Himax and shall not be distributed, reproduced, or disclosed in whole or in part without prior written permission of Himax.

5.8 Sleep Out –Command and Self-Diagnostic functions of The Display Module

5.8.1 Register Loading Detection

Sleep Out-command (See section 8.2.13 “Sleep Out (11h)”) is a trigger for an internal function of the display module, which indicates, if the display module loading function of factory default values from OTP (or similar device) to registers of the display controller is working properly. There are compared factory values of the OPT and register values of the display controller by the display controller. If those both values (OPT and register values) are same, there is inverted (=increased by 1) a bit, which is defined in command 8.2.9 “Read Display Self-Diagnostic Result (0Fh)” (=RDDSDR) (The used bit of this command is D7). If those both values are not same, this bit (D7) is not inverted (= increased by 1).
The flow chart for this internal function is following:

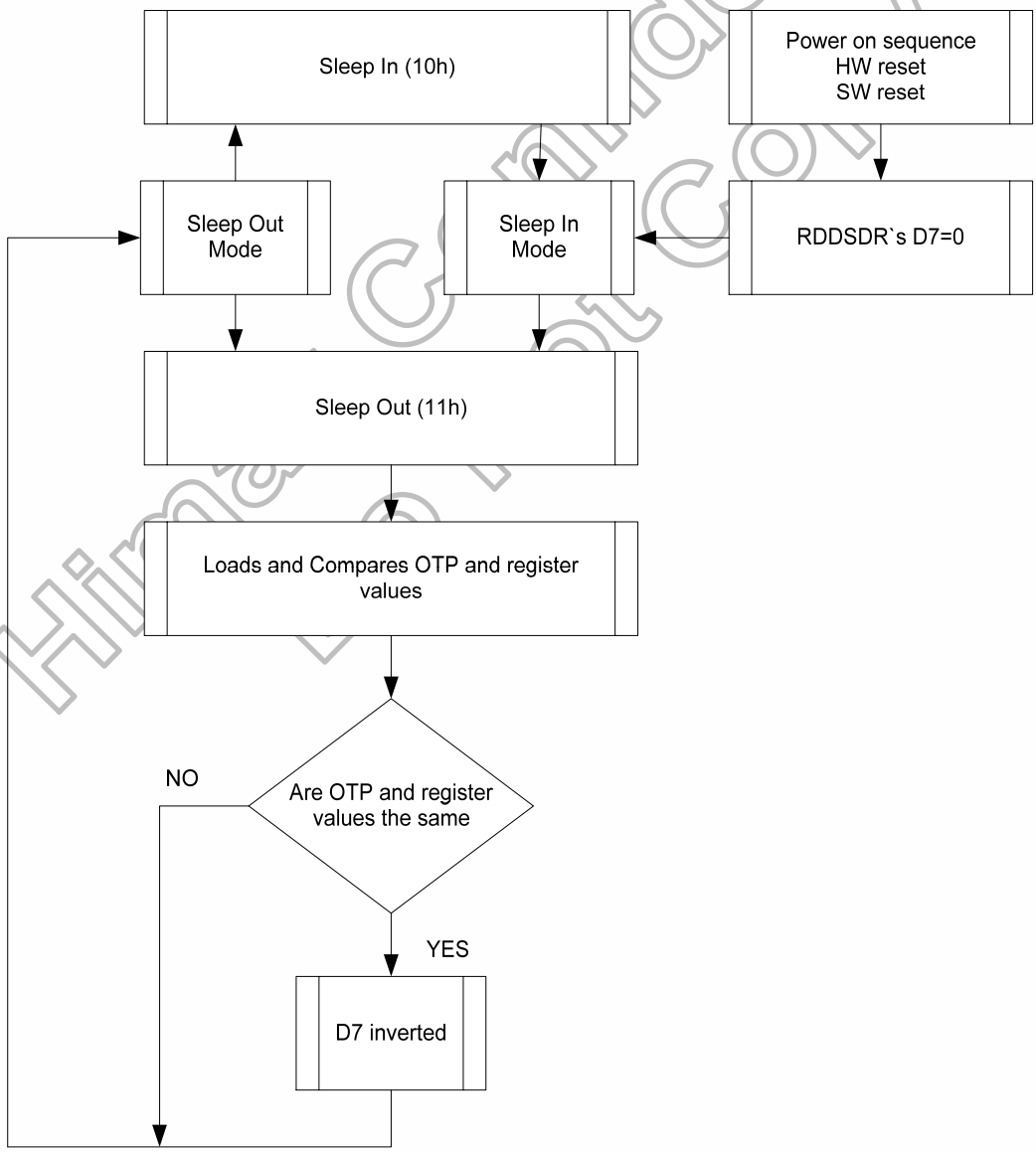

Figure 5.9 Sleep Out Flow Chart – Command and Self-Diagnostic Functions

Himax Confidential
This information contained herein is the exclusive property of Himax and shall not be distributed, reproduced, or disclosed in whole or in part without prior written permission of Himax.

5.8.2 Functionality Detection

Sleep Out-command (See “Sleep Out (11h)”) is a trigger for an internal function of the display module, which indicates, if the display module is still running and meets functionality requirements.
The internal function (= the display controller) is comparing, if the display module still meets functionality requirements (e.g. booster voltage levels, timings, etc.). If functionality requirement is met, 1 bit will be inverted (= increased by 1), which is defined in command “Read Display Self- Diagnostic Result (0Fh)” (= RDDSDR) (The used bit of this command is D6). If functionality requirement is not the same, this bit (D6) is not inverted (= increased by 1). The flow chart for this internal function is shown as below.

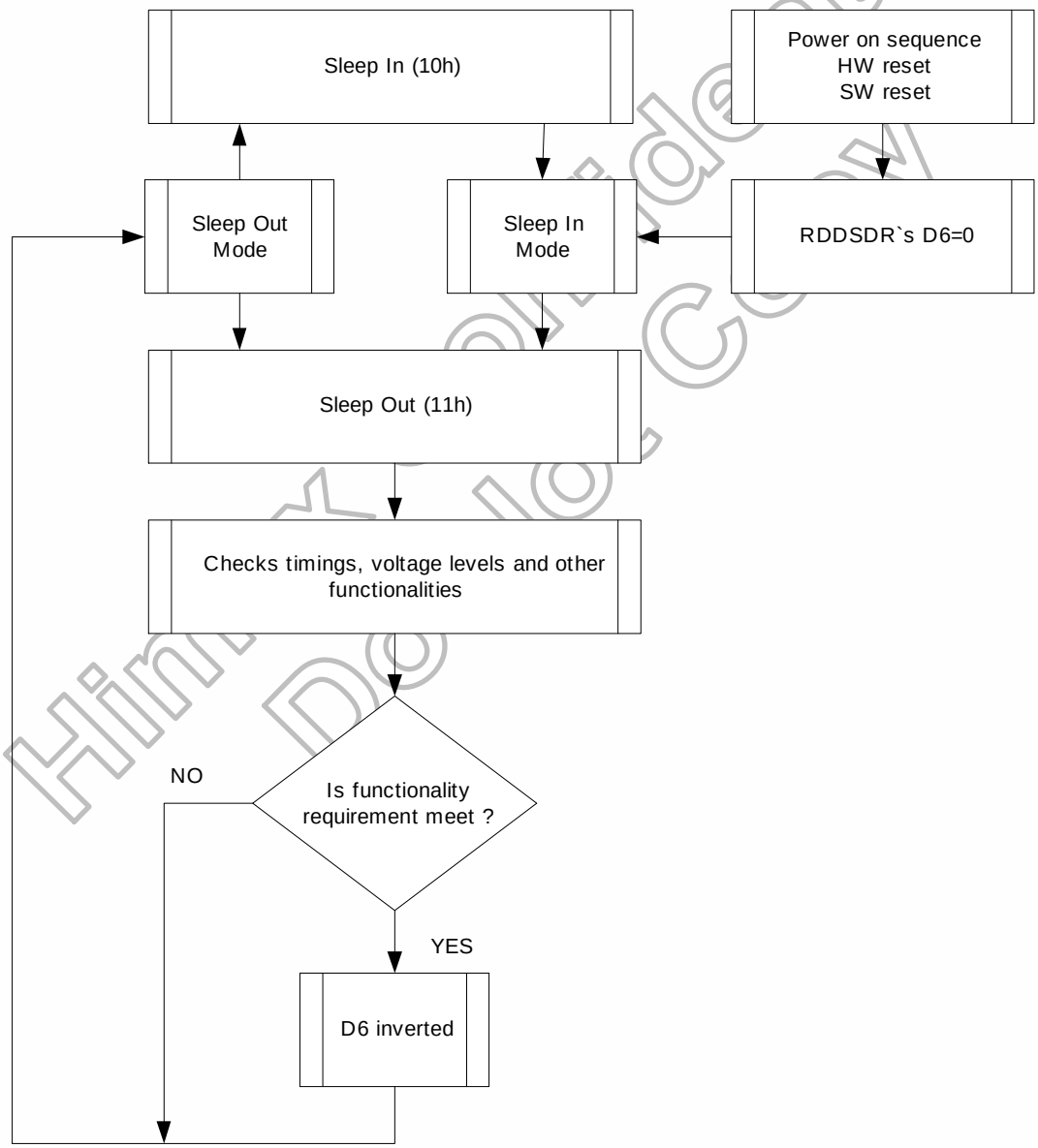

Figure 5.10 Sleep Out Flow Chart Internal Function Detection

Note: There is needed 120msec after Sleep Out -command, when there is changing from Sleep In –mode to Sleep Out -mode, before there is possible to check if Customer’s functionality requirements are met and a value of RDDSDR’s D6 is valid. Otherwise, there is 5msec delay for D6’s value, when Sleep Out –command is sent in Sleep Out -mode.

Himax Confidential
This information contained herein is the exclusive property of Himax and shall not be distributed, reproduced, or disclosed in whole or in part without prior written permission of Himax.

5.9 Power On/Off Sequence

VDD1, VDD2 and VDD3 can be applied in any order. VDD1, VDD2 and VDD3 can be powered down in any order. During power off, if LCD is in the Sleep Out mode, VDD1 and VDD2 must be powered down minimum 120msec after NRESET has been released. During power off, if LCD is in the Sleep In mode, VDD1, VDD2 and VDD3 can be powered down minimum 0msec after NRESET has been released. NCS can be applied at any timing or can be permanently grounded. NRESET has priority over NCS. There will be no damage to the display module if the power sequences are not met. There will be no abnormal visible effects on the display panel during the Power On/Off Sequences. There will be no abnormal visible effects on the display between end of Power On Sequence and before receiving Sleep Out command. Also between receiving Sleep In command and Power Off Sequence. If NRESET line is not held stable by host during Power On Sequence as defined in Sections 5.10.1 and 5.10.2, then it will be necessary to apply a Hardware Reset (NRESET) after Host Power On Sequence is complete to ensure correct operation. Otherwise function is not guaranteed. The power on/off sequence is illustrated below.

Himax Confidential
Do Not Copy

This information contained herein is the exclusive property of Himax and shall not be distributed, reproduced, or disclosed in whole or in part without prior written permission of Himax.

5.9.1 Case 1 – NRESET line is held High or Unstable by Host at Power On

If NRESET line is held high or unstable by the host during Power On, then a Hardware Reset must be applied after both VDD1, VDD2 and VDD3 have been applied – otherwise correct functionality is not guaranteed. There is no timing restriction upon this hardware reset.

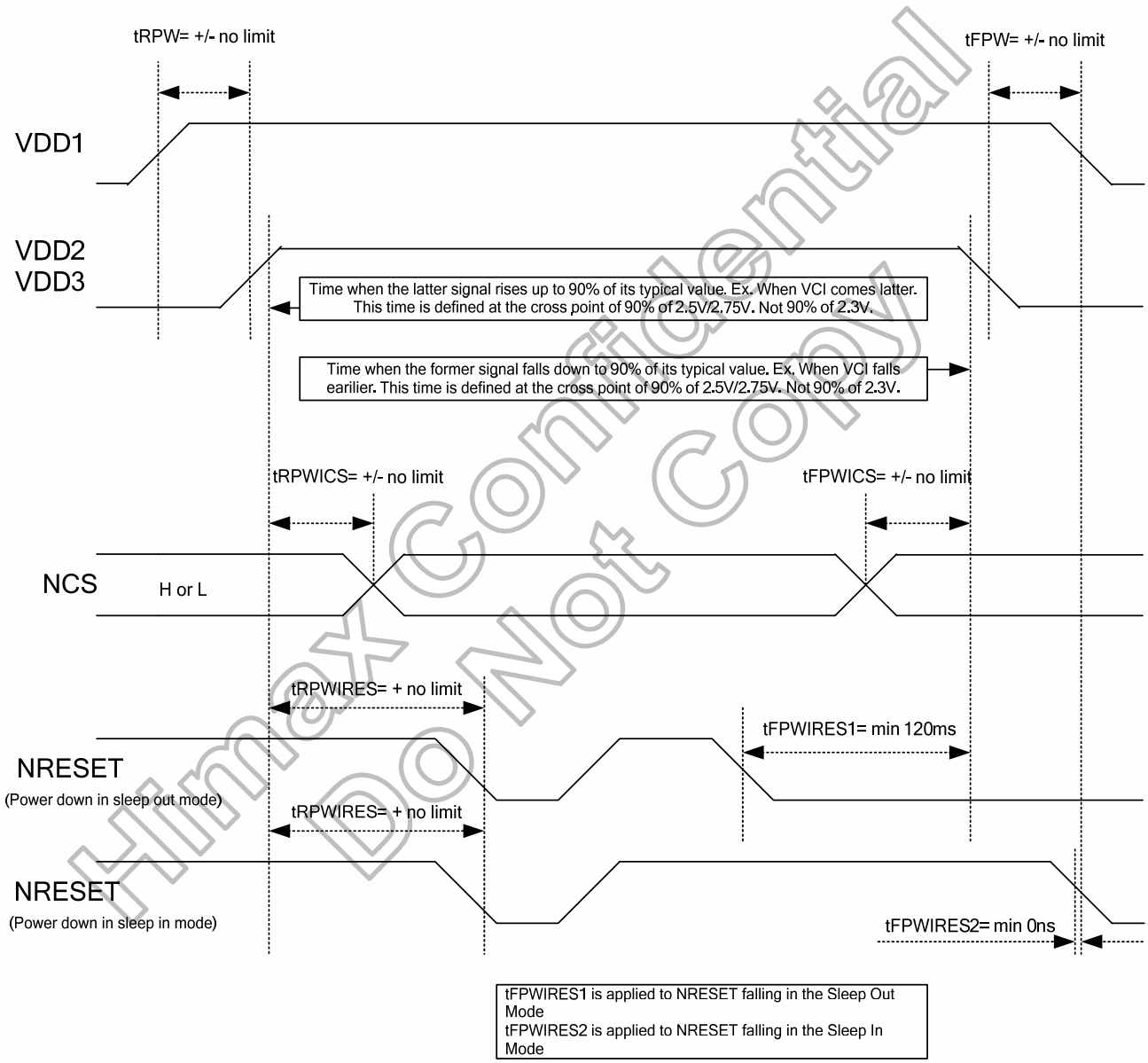

Figure 5.11 Case 1 – NRESET line is held High or Unstable by Host at Power On

Himax Confidential
Do Not Copy

This information contained herein is the exclusive property of Himax and shall not be distributed, reproduced, or disclosed in whole or in part without prior written permission of Himax.

5.9.2 Case 2 – NRESET line is held Low by Host at Power On

If NRESET line is held Low (and stable) by the host during Power On, then the NRESET must be held low for minimum 10µsec after both VDD1, VDD2 and VDD3 have been applied.

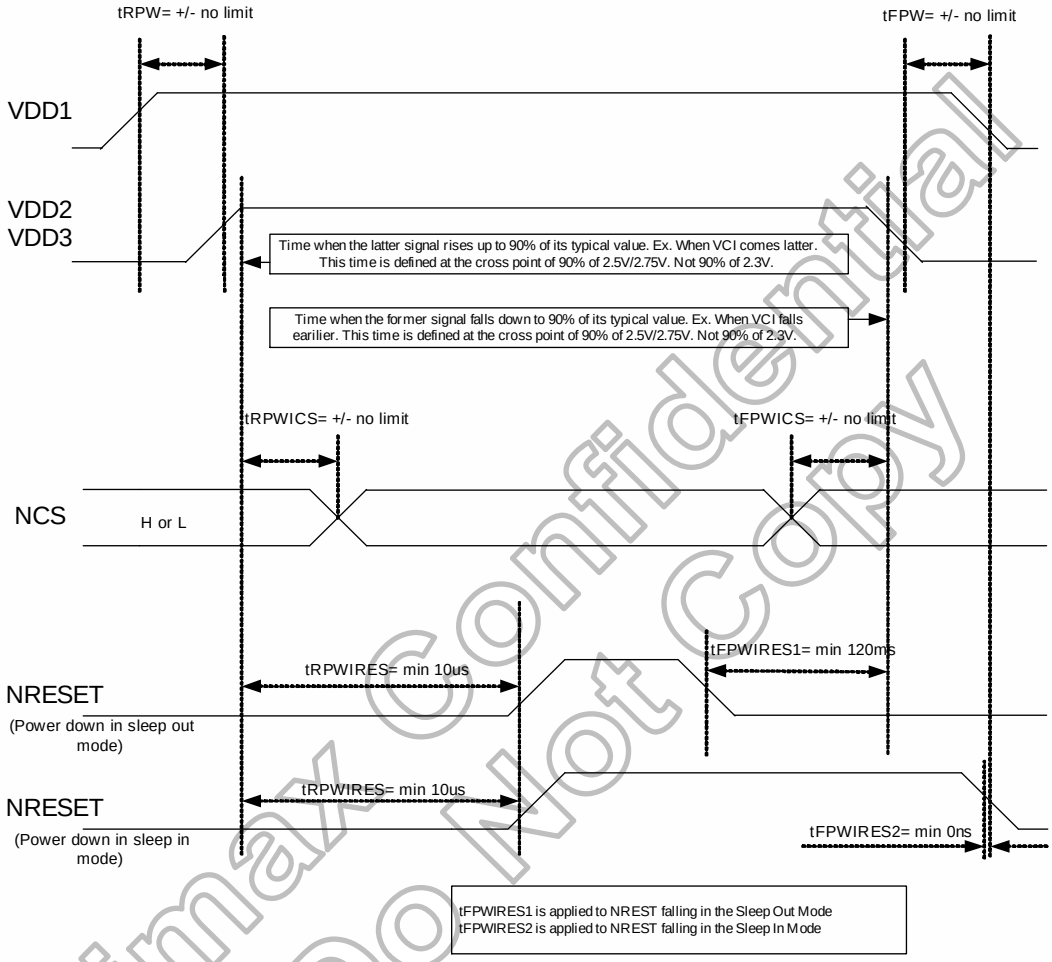

Figure 5.12 Case 2 – NRESET line is held Low by Host at Power On

Himax Confidential
Do Not Copy

5.10 Uncontrolled Power Off

The uncontrolled power off means a situation when e.g. there is removed a battery without the controlled power off sequence. There will not be any damages for the display module or the display module will not cause any damages for the host or lines of the interface. At an uncontrolled power off the display will go blank and there will not be any visible effects within 1 second on the display (blank display) and remains blank until “Power On Sequence” powers it up.

Note: HX83xx-A is support the noise reject filter (10us) to reject spike or noise.

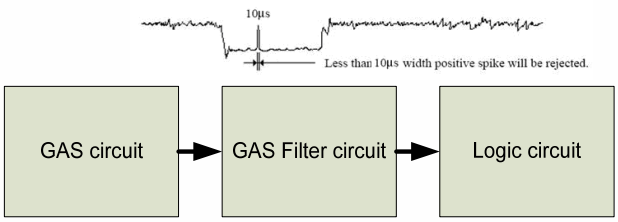

This information contained herein is the exclusive property of Himax and shall not be distributed, reproduced, or disclosed in whole or in part without prior written permission of Himax.

5.11 Content Adaptive Brightness Control (CABC) Function

The general block diagram of the CABC and the brightness control is illustrated below:

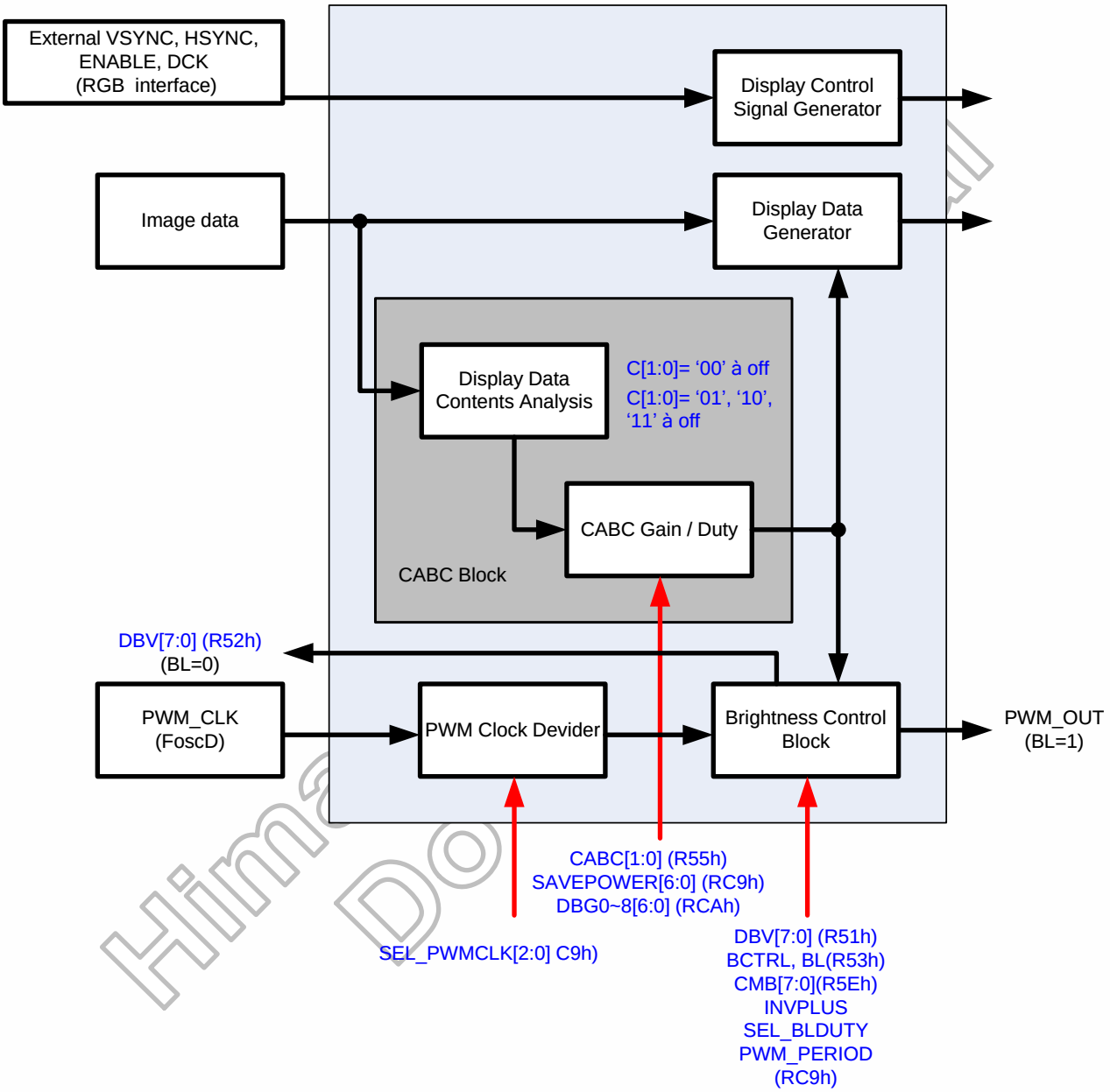

Figure 5.13 CABC Block Diagram

This information contained herein is the exclusive property of Himax and shall not be distributed, reproduced, or disclosed in whole or in part without prior written permission of Himax.

5.11.1 Module Architectures

HX83xx-A can support two module architectures for CABC operation. The **BL** bit setting of R53h can be used to select used display module architecture. White LED driver circuit for display backlight is located on the main PWB, not in the display module both in architecture I and II.

- Architecture I

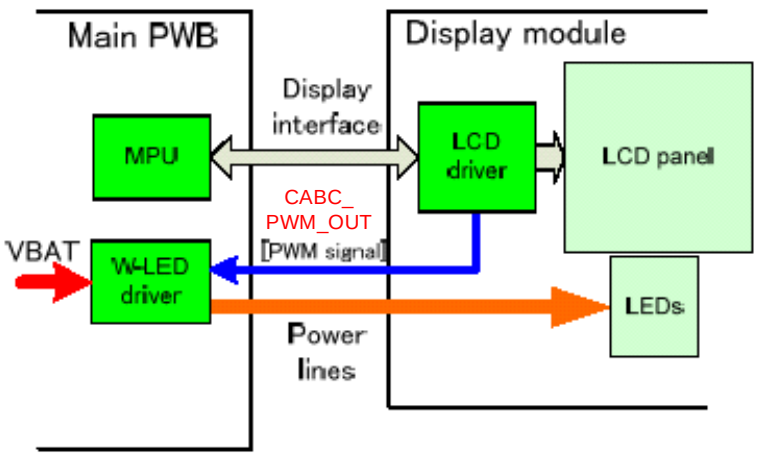

1. **BL** =`1` of R53h
2. LED backlight brightness for the display is controlled by external output "CABC_PWM_OUT" .

- Architecture II

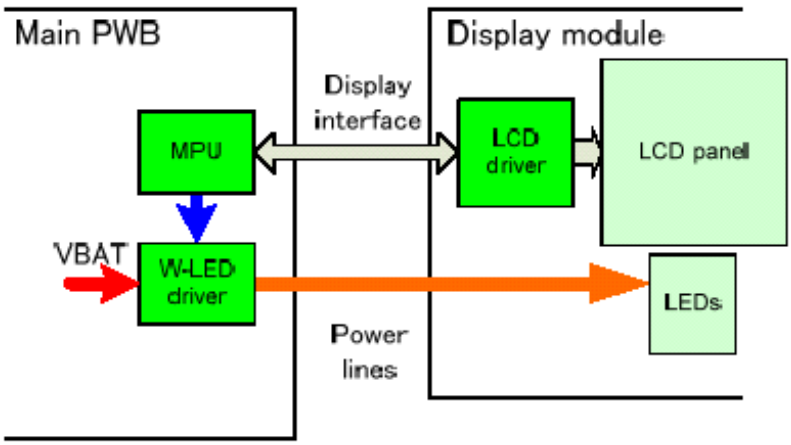

1. **BL** =`0` of R53h
2. LED backlight brightness data for the display is read with DBV[7:0] bits of R52h.
3. Read commands R53h should be synchronized with V-sync.

Figure 5.14 Module architecture

Confidential
Do not Copy

This information contained herein is the exclusive property of Himax and shall not be distributed, reproduced, or disclosed in whole or in part without prior written permission of Himax.

5.11.2 Brightness Control Block

There is an external output signal from brightness block, CABC_PWM_OUT, to control the LED driver IC in order to control display brightness.

There are resister bits, DBV[7:0] of R51h, for display brightness of manual brightness setting. The CABC_PWM_OUT duty is calculated as (DBV[7:0])/255 x CABC duty (generated after one-frame display data content analysis).

For ex: CABC_PWM_OUT period = 2.95 ms, and DBV[7:0](R51h) = '228_{DEC}' and CABC duty is 74%. Then CABC_PWM_OUT duty = (228) / 255 x 74.42% ≡ 66.54%. Correspond to the CABC_PWM_OUT period = 2.95 ms, the high-level of CABC_PWM_OUT (high effective) = 1.96ms, and the low-level of CABC_PWM_OUT = 0.99ms.

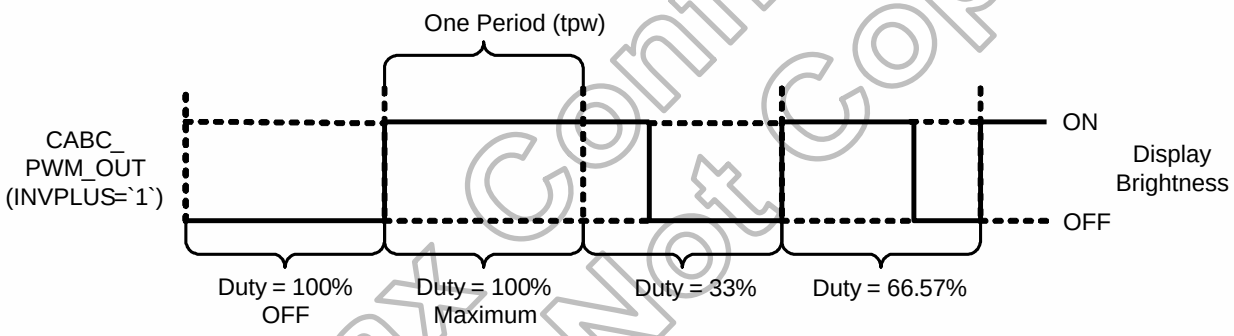

Figure 5.15 CABC_PWM_OUT Output Duty

Symbol	Parameter	Min	max	unit	description
tpw	Pulse width	0.0333	8.33	ms	

Table 5.43 CABC timing table

Note1: The signal rise and fall times (tf, tr) are stipulated to be equal to or less than 15ns.
Note2: The pulse width range by setting CABC related registers is locate between 0.0333ms to 8.33ms.

When Architecture II module is used (**BL**='0') with the example below, the CABC_PWM_OUT is always output low and the DBV[7:0](R51h) will be read a value as 169_{DEC} ((169)/255≡ 66.27%).

Himax Confidential
Do Not Copy

5.11.3 Minimum brightness setting of CABC function

CABC function is automatically reduced backlight brightness based on image contents. In the case of the combination with the CABC or manual brightness setting, display brightness is too dark. It must affect to image quality degradation. CABC minimum brightness setting (**CMB[7:0]** bits of R5Eh) is to avoid too much brightness reduction.

When CABC is active, CABC can not reduce the display brightness to less than CABC minimum brightness setting. Image processing function is worked as normal, even if the brightness can not be changed.

This function does not affect to the other function, manual brightness setting. Manual brightness can be set the display brightness to less than CABC minimum brightness. Smooth transition and dimming function can be worked as normal.

When display brightness is turned off (**BCTRL='0'** of R53h), CABC minimum brightness setting is ignored. "**CMB[7:0],** Read CABC minimum brightness (R5Fh)" always read the setting value of "**CMB[7:0],** Write CABC minimum brightness (R5Eh)"

Himax Confidential
Do Not Copy

This information contained herein is the exclusive property of Himax and shall not be distributed, reproduced, or disclosed in whole or in part without prior written permission of Himax.

6. Command

6.1 Command List

6.1.1 Standard Command

(Hex)	Operation Code	DNC	D7	D6	D5	D4	D3	D2	D1	D0	Function	Default (HEX)
00	NOP	0	0	0	0	0	0	0	0	0	No operation	
01	SWRESET	0	0	0	0	0	0	0	0	1	Software reset	
06	RDRED	0	0	0	0	0	0	1	1	0	Read Red Color	
		1	R[7:0]									
07	RDGREEN	0	0	0	0	0	0	1	1	1	Read Green Color	
		1	G[7:0]									
08	RDBLUE	0	0	0	0	0	1	0	0	0	Read Blue Color	
		1	B[7:0]									
0A	RDDPM	0	0	0	0	0	1	0	1	0	Read display power mode	
		1	D[7:0]									
0B	RDDMADCTL	0	0	0	0	0	1	0	1	1	Read display MADCTL	
		1	D[7:0]									
0C	RDDCOLMOD	0	0	0	0	0	1	1	0	0	Read display pixel format	
		1	D[7:0]									
0D	RDDIM	0	0	0	0	0	1	1	0	1	Read display image mode	
		1	D[7:0]									
0E	RDDSM	0	0	0	0	0	1	1	1	0	Read Display Signal Mode	
		1	D[7:0]									
0F	RDDSDR	0	0	0	0	0	1	1	1	1	Read display self-diagnostic result	
		1	D[7:0]									
10	SLPIN	0	0	0	0	1	0	0	0	0	Sleep in and charge-pump off	
11	SLPOUT	0	0	0	0	1	0	0	0	1	Sleep out and charge-pump on	
20	INVOFF	0	0	0	1	0	0	0	0	0	Display inversion off	
21	INVON	0	0	0	1	0	0	0	0	1	Display inversion on	
26	GAMSET	0	0	0	1	0	0	1	1	0	Gamma set	
		1	GC[7:0]									
28	DISPOFF	0	0	0	1	0	1	0	0	0	Display off	
29	DISPON	0	0	0	1	0	1	0	0	1	Display on	

Himax Confidential
Do Not Copy

This information contained herein is the exclusive property of Himax and shall not be distributed, reproduced, or disclosed in whole or in part without prior written permission of Himax.

(Hex)	Operation Code	DNC	D7	D6	D5	D4	D3	D2	D1	D0	Function	Default (HEX)
36	MADCTL	0	0	0	1	1	0	1	1	0	Memory access control	
		1	xx	xx	xx	xx	BGR	xx	SS	GS		
3A	COLMOD	0	0	0	1	1	1	0	1	0	Interface Pixel Format	
		1	xx	CSEL_RGB[2:0](110)			xx	xx	xx	xx		
A1	Read_DDB_start	0	1	0	1	0	0	0	0	1	Read the DDB from the provided location.	
		1	ID1								The five bytes alaway output	
		1	ID2									
		1	ID3									
		1	ID4									
		1	8'hFF									
A8	Read_DDB_continue	0	1	0	1	0	1	0	0	0	Continue reading the DDB from the last read location.	
		1	DDB data									
		1	:									
		1	:									
DA	RDID1	0	1	1	0	1	1	0	1	0	Read ID1	
		1	module's manufacturer[7:0]									
DB	RDID2	0	1	1	0	1	1	0	1	1	Read ID2	
		1	1	LCD module/driver version [6:0]								
DC	RDID3	0	1	1	0	1	1	1	0	0	Read ID3	
		1	LCD module/driver ID[7:0]									

Himax Confidential
Do Not Copy

This information contained herein is the exclusive property of Himax and shall not be distributed, reproduced, or disclosed in whole or in part without prior written permission of Himax.

(Hex)	Operation Code	DNC	D7	D6	D5	D4	D3	D2	D1	D0	Function	Default (HEX)
51	WRDISBV	0	0	1	0	1	0	0	0	1	Write Display Brightness	
		1	WRDBV[7:0](00)									
52	RDDISBV	0	0	1	0	1	0	0	1	0	Read Display Brightness Value	
		1	RDDBV[7:0]									
53	WRCTRLD	0	0	1	0	1	0	0	1	1	Write CTRL Display	
		1	0	0	BCTRL	0	DD	BL	xx	xx		
54	RDCTRLD	0	0	1	0	1	0	1	0	0	Read Control Value Display	
		1	xx	xx	BCTRL	xx	DD	BL	xx	xx		
55	WRCABC	0	0	1	0	1	0	1	0	1	Write Content Adaptive Brightness Control	
		1	xx	xx	xx	xx	xx	xx	CABC[1:0](00)			
56	RDCABC	0	0	1	0	1	0	1	1	0	Read Content Adaptive Brightness Control	
		1	xx	xx	xx	xx	xx	xx	CABC[1:0]			
5E	WRCABCMB	0	0	1	0	1	1	1	1	0	Write CABC minimum brightness	
		1	CMB 7	CMB 6	CMB 5	CMB 4	CMB 3	CMB 2	CMB 1	CMB 0		
5F	RDCABCMB	0	0	1	0	1	1	0	1	1	Read CABC minimum brightness	
		1	CMB[7:0]									

Note: (1) Undefined commands are treated as NOP (00_H) command.
(2) $B0_H$ to $D9_H$ and DE_H to FF_H are for factory use of display supplier. Nokia can decide if these commands are available or they are treated as NOP (00_H) commands before shipping to Nokia. Default value is NOP (00_H).

Himax Confidential
Do Not Copy

This information contained herein is the exclusive property of Himax and shall not be distributed, reproduced, or disclosed in whole or in part without prior written permission of Himax.

6.1.2 User Define Command List Table

User define command list is available only set “SETEXC” command.

(Hex)	Operation Code	DNC	D7	D6	D5	D4	D3	D2	D1	D0	Function
B1	SETPOWER	0	1	0	1	1	0	0	0	1	Set power related setting
		1	-	VSN_EN	VSP_EN	VGL_EN	VGH_EN	-	VDDDN_HZ	SLP	
		1	-	FS12	FS11	FS10	-	AP2	AP1	AP0	
		1	-	-	-	-	BT3	BT2	BT1	BT0	
		1	DT1	DT0	DC1	DC0	DC_DIV3	DC_DIV2	DC_DIV1	DC_DIV0	
		1	-	DTPS2	DTPS1	DTPS0	-	DTP2	DTP1	DTP0	
		1	-	DTNS2	DTNS1	DTNS0	-	DTN2	DTN1	DTN0	
		1	-	-	-	BTP4	BTP3	BTP2	BTP1	BTP0	
		1	-	-	-	BTN4	BTN3	BTN2	BTN1	BTN0	
		1	VRHP7	VRHP6	VRHP5	VRHP4	VRHP3	VRHP2	VRHP1	VRHP0	
		1	VRHN7	VRHN6	VRHN5	VRHN4	VRHN3	VRHN2	VRHN1	VRHN0	
		1	-	-	VRMP5	VRMP4	VRMP3	VRMP2	VRMP1	VRMP0	
		1	-	-	VRMN5	VRMN4	VRMN3	VRMN2	VRMN1	VRMN0	
B3	SETRGBIF	0	1	0	1	1	0	0	1	1	Set RGB interface related register)
		1	-	-	-	-	DPL (0)	HSPL (0)	VSPL (0)	EPL (1)	
B4	SETCYC	0	1	0	1	0	0	1	0	0	Set Display waveform cycles
		1	-	-	-	-	NW[1:0]		-		
		1	SON[7:0]								
		1	SOFF[7:0]								
		1	EQS[7:0]								
		1	EQON[7:0]								
		1	GDON[7:0]								
		1	GDOFF[7:0]								
		1	GVSSP1[7:0]								
		1	GVSSP2[7:0]								
B6	SETVCOM (OTPx3)	0	1	0	1	1	0	1	1	0	Set VCOM Voltage
		1	VCMC7	VCMC 6	VCMC 5	VCMC 4	VCMC3	VCMC 2	VCMC 1	VCMC 0	
B9	SETEXTC	0	1	0	1	1	1	0	0	1	Set extended command set
		1	EXTC1[7:0](00)								
		1	EXTC2[7:0](00)								
		1	EXTC3[7:0](00)								
BB	SETOTP	0	1	0	1	1	1	0	1	1	Set OTP Related Setting
		1	OTP_LOAD_DISABLE (0)	-	OTP_PCE	OTP_PWE (0)	OTP_PTM[2:0]			OTP_PROG	
		1	OTP_MASK[7:0] (8'b0)								
		1	OTP_INDEX[7:0] (8'b1111_1111)								
		1	OTP_DATA_READ								
		1	PTBA[7:0]								
C1	SETDGCLUT	0	1	1	0	0	0	0	0	1	Set DGC LUT
		1	-	-	-	-	-	-	-	DGC_EN	
		1	D1[7:0]								
		1	Dn[7:0]								
		1	D126[7:0]								
C3	SETID	0	1	1	0	0	0	0	1	1	Set ID
		1	ID1[7:0](8'b0)								
		1		ID2[6:0](7'b0)							
		1	ID3[7:0](8'b0)								
C4	SETDDB	0	1	1	0	0	0	1	0	0	Set DDB
		1	DDB1[7:0](8'b0)								
		1	DDB2[7:0](8'b0)								
		1	DDB3[7:0](8'b0)								
		1	DDB4[7:0](8'b0)								

Himax Confidential
Do Not Copy

(Hex)	Operation Code	DNC	D7	D6	D5	D4	D3	D2	D1	D0	Function
CC	SETPANEL	0	1	1	0	0	1	1	0	0	Get panel related register
		1	-	-	-	SM_PANEL(0)	SS_PANEL(0)	GS_PANEL(0)	REV_PANEL(1)	BGR_PANEL(0)	
FE	SET SPI READ INDEX	0	1	1	1	1	1	1	1	0	SET SPI READ Command Address
		1	CMD_ADD[7:0]								
FF	SPIREAD	0	1	1	1	1	1	1	1	1	Read SPI Command Data
		1	CMD_DATA1[7:0]								
		1	:								
		1	CMD_DATAN[7:0]								

Himax Confidential
Do Not Copy

This information contained herein is the exclusive property of Himax and shall not be distributed, reproduced, or disclosed in whole or in part without prior written permission of Himax.

(Hex)	Operation Code	NDC	D7	D6	D5	D4	D3	D2	D1	D0	Function
E0	SETGAMMA (OTPx4)	0	1	1	1	0	0	0	0	0	Set Gamma Curve Related Setting
		1	-	-	G1_VRP0[5:0]						
		1	G1_CGMP0[1:0]		G1_VRP1[5:0]						
		1	G1_CGMP1[1:0]		G1_ VRP2[5:0]						
		1	G1_CGMP2[1:0]		G1_VRP3[5:0]						
		1	G1_CGMP3[1:0]		G1_VRP4[5:0]						
		1	G1_CGMP5	G1_CGMP4	G1_VRP5[5:0]						
		1		G1_PRP0[6]	-	G1_PKP0[4:0]					
		1	G1_PRP0[5:4]		-	G1_PKP1[4:0]					
		1	G1_PRP0[3:2]		-	G1_PKP2[4:0]					
		1	G1_PRP0 [1:0]		-	G1_PKP3[4:0]					
		1		G1_PRP1[6]	-	G1_PKP4[4:0]					
		1	G1_PRP1[5:4]		-	G1_PKP5[4:0]					
		1	G1_PRP1[3:2]		-	G1_ PKP6[4:0]					
		1	G1_PRP1[1:0]		-	G1_PKP7[4:0]					
		1			-	G1_PKP8[4:0]					
		1		G1_VRN0[5:0]							
		1	G1_CGMN0[1:0]		G1_VRN1[5:0]						
		1	G1_CGMN1[1:0]		G1_VRN2[5:0]						
		1	G1_CGMN2[1:0]		G1_VRN3[5:0]						
		1	G1_CGMN3[1:0]		G1_VRN4[5:0]						
		1	G1_CGMN5	G1_CGMN4	G1_VRN5[5:0]						
		1		G1_PRN0[6]	-	G1_PKN0[4:0]					
		1	G1_PRN0[5:4]		-	G1_ PKN1[4:0]					
		1	G1_PRN0[3:2]		-	G1_PKN2[4:0]					
		1	G1_PRN0 [1:0]		-	G1_PKN3[4:0]					
		1		G1_PRN1[6]	-	G1_PKN4[4:0]					
		1	G1_PRN1[5:4]		-	G1_PKN5[4:0]					
		1	G1_PRN1[3:2]		-	G1_PKN6[4:0]					
		1	G1_PRN1[1:0]		-	G1_PKN7[4:0]					
		1	-	-	-	G1_PKN8[4:0]					

Himax Confidential
Do Not Copy

This information contained herein is the exclusive property of Himax and shall not be distributed, reproduced, or disclosed in whole or in part without prior written permission of Himax.

6.2 Command Description

6.2.1 NOP

00 H	NOP (No Operation)									
	DNC	D7	D6	D5	D4	D3	D2	D1	D0	HEX
Command	0	0	0	0	0	0	0	0	0	00
Parameter	NO PARAMETER									
Description	This command is an empty command; it does not have any effect on the display module.									
Restriction										
Register Availability	Status: Sleep Out — Availability: Yes Status: Sleep In — Availability: Yes									
Default	Status: Power On Sequence — Default Value: N/A Status: S/W Reset — Default Value: N/A									
Flow Chart										

Himax Confidential
Do Not Copy

6.2.2 Software Reset (01h)

01 H	SWRESET (Software Reset)									
	DNC	D7	D6	D5	D4	D3	D2	D1	D0	HEX
Command	0	0	0	0	0	0	0	0	1	01
Parameter	NO PARAMETER									
Description	When the Software Reset command is written, it causes a software reset. It resets the commands and parameters to their S/W Reset default values. (See default tables in each command description.)									
Restriction	It will be necessary to wait 5msec before sending new command following software reset. The display module loads all display supplier's factory default values to the registers during this 5msec. If Software Reset is applied during Sleep Out mode, it will be necessary to wait 120msec before sending Sleep out command. Software Reset Command cannot be sent during Sleep Out sequence.									
Register Availability	Status: Sleep Out — Availability: Yes Status: Sleep In — Availability: Yes									
Default	Status: Power On Sequence — Default Value: N/A Status: S/W Reset — Default Value: N/A									
Flow Chart	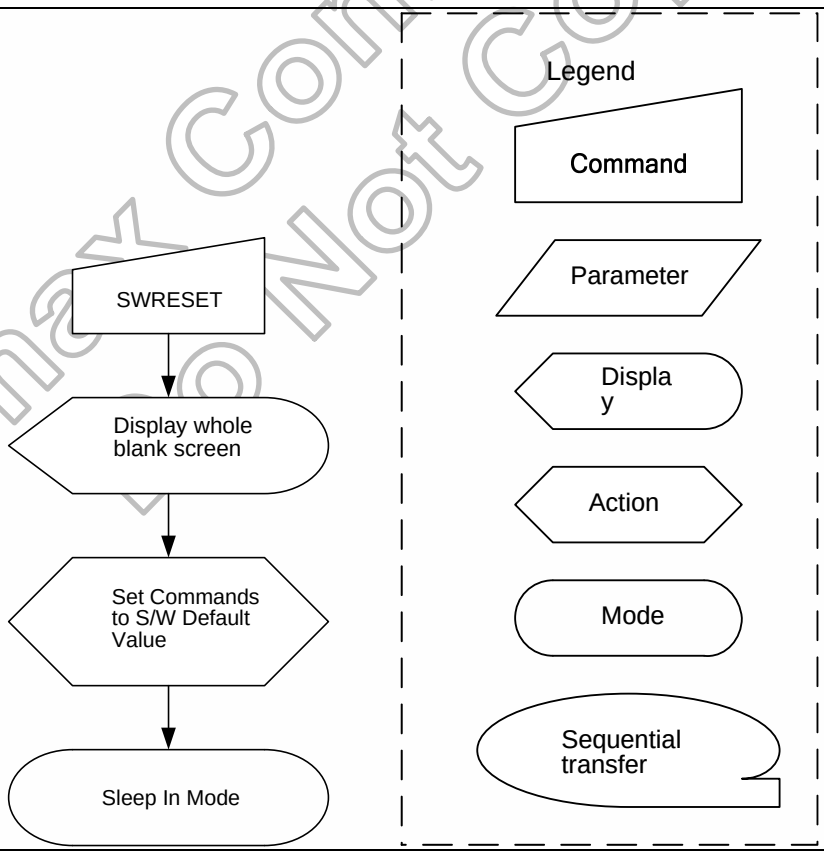									

Himax Confidential
Do Not Copy

6.2.3 Read Red Color (06h)

06 H	RDRED (Read Red Colour)									
	DNC	D7	D6	D5	D4	D3	D2	D1	D0	HEX
Command	0	0	0	0	0	0	1	1	0	06
1st parameter	1	R7	R6	R5	R4	R3	R2	R1	R0	xx
Description	The first parameter is telling red colour value of the first pixel of the frame when there is used RGB I/F. 16 bit format: R5 is MSB and R1 is LSB. R7, R6 and R0 are set to '0'. 18 bit format: R5 is MSB and R0 is LSB. R7 and R6 are set to '0'. 24 bit format: R7 is MSB and R0 is LSB.									
Restriction										
Register Availability	Status: Availability Sleep Out: Yes Sleep In: Yes									
Default	Status: Default Value Power On Sequence: 00h S/W Reset: 00h H/W Reset: 00h									
Flow Chart	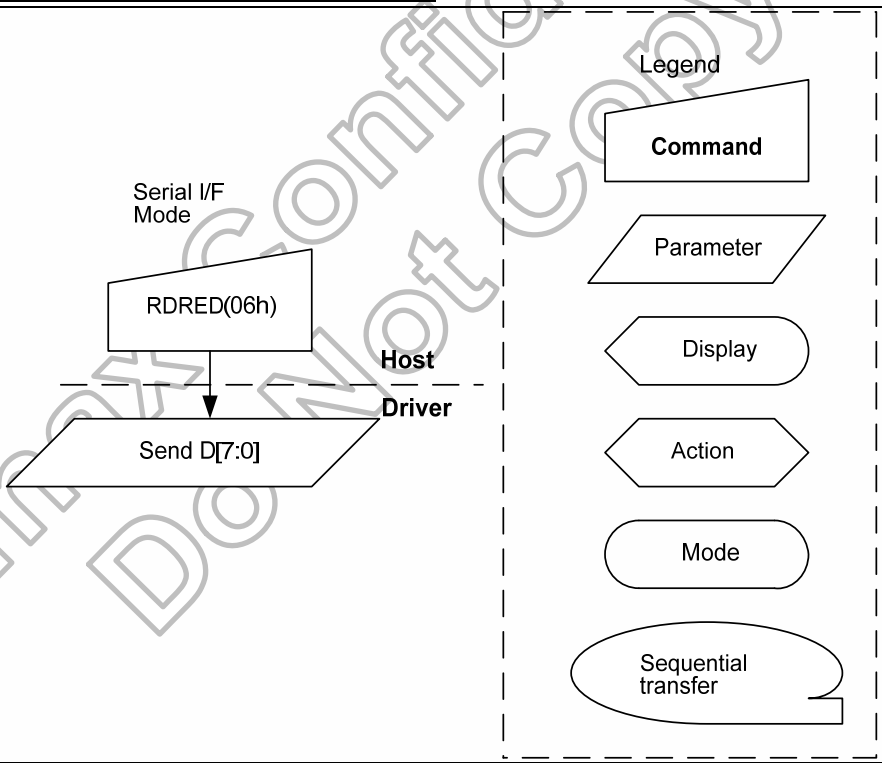									

Himax Confidential
Do Not Copy

This information contained herein is the exclusive property of Himax and shall not be distributed, reproduced, or disclosed in whole or in part without prior written permission of Himax.

6.2.4 Read Green Color (07h)

07 H	RDGREEN (Read Green Colour)									
	DNC	D7	D6	D5	D4	D3	D2	D1	D0	HEX
Command	0	0	0	0	0	0	1	1	1	01
1st parameter	1	G7	G6	G5	G4	G3	G2	G1	G0	xx
Description	The first parameter is telling green colour value of the first pixel of the frame when there is used RGB I/F. 16 and 18 bit formats: G5 is MSB and G0 is LSB. G7 and G6 are set to '0'. 24 bit format: G7 is MSB and G0 is LSB.									
Restriction										
Register Availability	Status: Availability Sleep Out: Yes Sleep In: Yes									
Default	Status: Default Value Power On Sequence: 00h S/W Reset: 00h H/W Reset: 00h									
Flow Chart	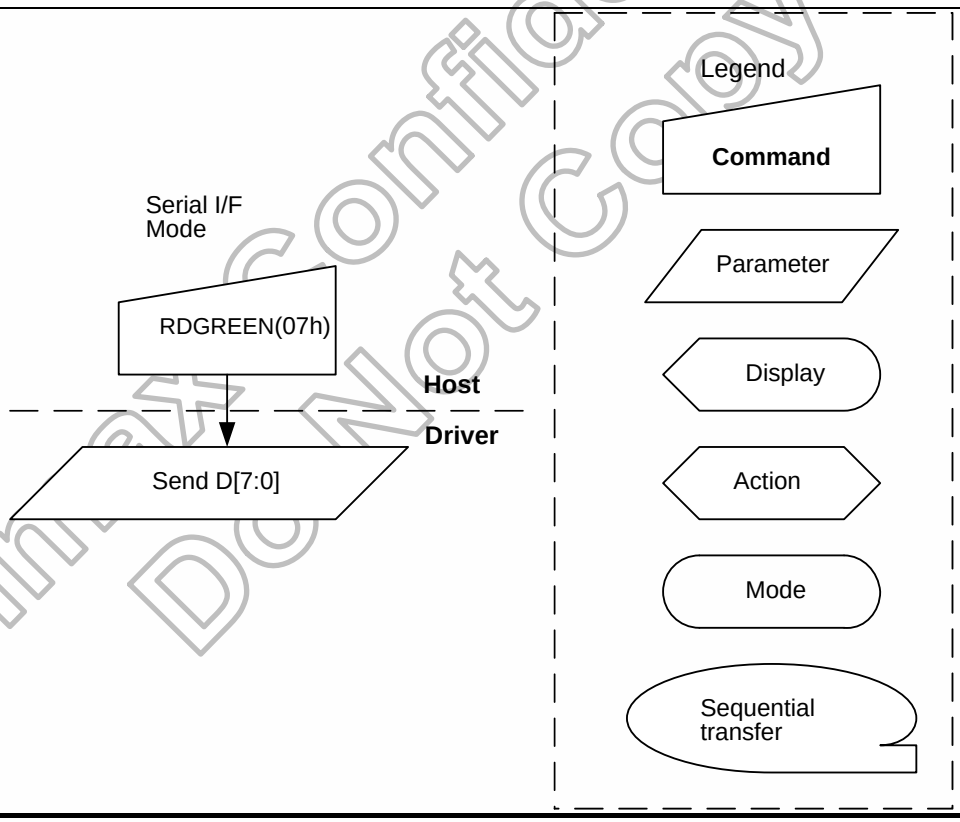									

Himax Confidential Do Not Copy

This information contained herein is the exclusive property of Himax and shall not be distributed, reproduced, or disclosed in whole or in part without prior written permission of Himax.

6.2.5 Read Blue Color (08h)

08 H	RDBLUE (Read Blue Colour)									
	DNC	D7	D6	D5	D4	D3	D2	D1	D0	HEX
Command	0	0	0	0	0	1	0	0	0	08
1st parameter	1	B7	B6	B5	B4	B3	B2	B1	B0	xx
Description	The first parameter is telling blue colour value of the first pixel of the frame when there is used RGB I/F. 16 bit format: B5 is MSB and B1 is LSB. B7, B6 and B0 are set to '0'. 18 bit format: B5 is MSB and B0 is LSB. B7 and B6 are set to '0'. 24 bit format: B7 is MSB and B0 is LSB.									
Restriction										
Register Availability	Status: Availability Sleep Out: Yes Sleep In: Yes									
Default	Status: Default Value Power On Sequence: 00h S/W Reset: 00h H/W Reset: 00h									
Flow Chart	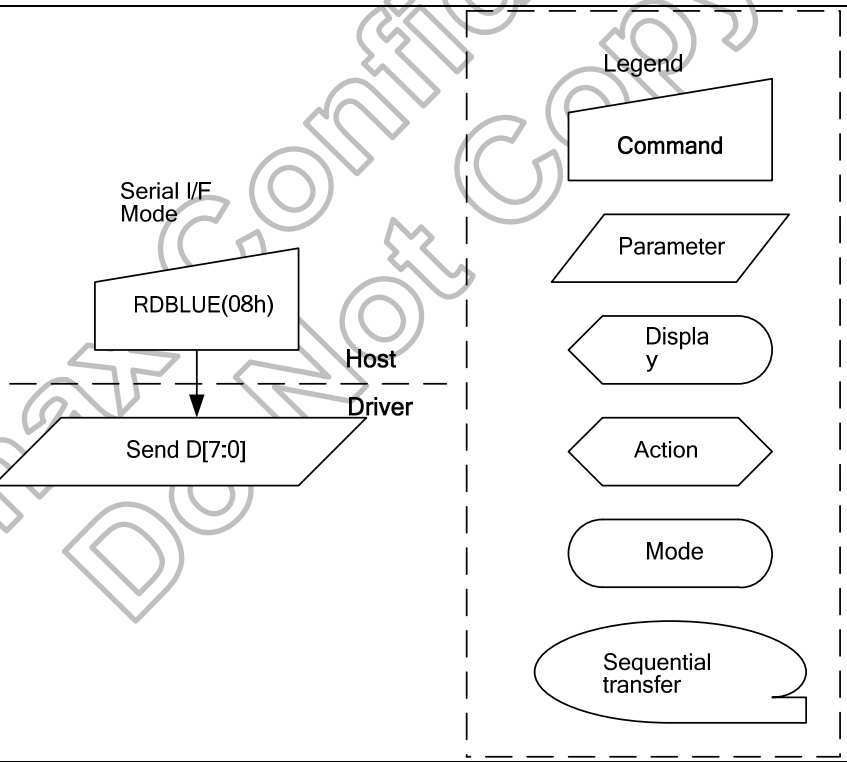									

Himax Confidential Do Not Copy

This information contained herein is the exclusive property of Himax and shall not be distributed, reproduced, or disclosed in whole or in part without prior written permission of Himax.

6.2.6 Read Display Power Mode (0Ah)

0A H	RDDPM (Read Display Power Mode)									
	DNC	D7	D6	D5	D4	D3	D2	D1	D0	HEX
Command	0	0	0	0	0	1	0	1	0	0A
1st parameter	1	D[7:0]								xx

Description

This command indicates the current status of the display as described in the table below:

Bit	Description	Comment
D7	Booster Voltage Status	
D6	Idle Mode On/Off	Set to '0'
D5	Partial Mode On/Off	Set to '0'
D4	Sleep In/Out	
D3	Display Normal Mode On/Off	
D2	Display On/Off	
D1	Not Defined	Set to '0'
D0	Not Defined	Set to '0'

Bit D7 – Booster Voltage Status
'0' = Booster Off or has a fault.
'1' = Booster On and working OK (Meets display supplier's optical requirements).
Bit D6 – Idle Mode On/Off
This bit is not applicable for this project, so it is set to "0".
Bit D5 – Partial Mode On/Off
This bit is not applicable for this project, so it is set to "0".
Bit D4 – Sleep In/Out
'0' = Sleep In Mode.
'1' = Sleep Out Mode.
Bit D3 – Display Normal Mode On/Off
'0' = Display Normal Mode Off.
'1' = Display Normal Mode On.
Bit D2 – Display On/Off
'0' = Display is Off.
'1' = Display is On.

Restrictions

Register Availability

Status	Availability
Sleep Out	Yes
Sleep In or Booster Off	Yes

Default

Status	Default Value
Power On Sequence	08HEX
S/W Reset	08HEX

Himax Confidential
Do Not Copy

This information contained herein is the exclusive property of Himax and shall not be distributed, reproduced, or disclosed in whole or in part without prior written permission of Himax.

Flow Chart

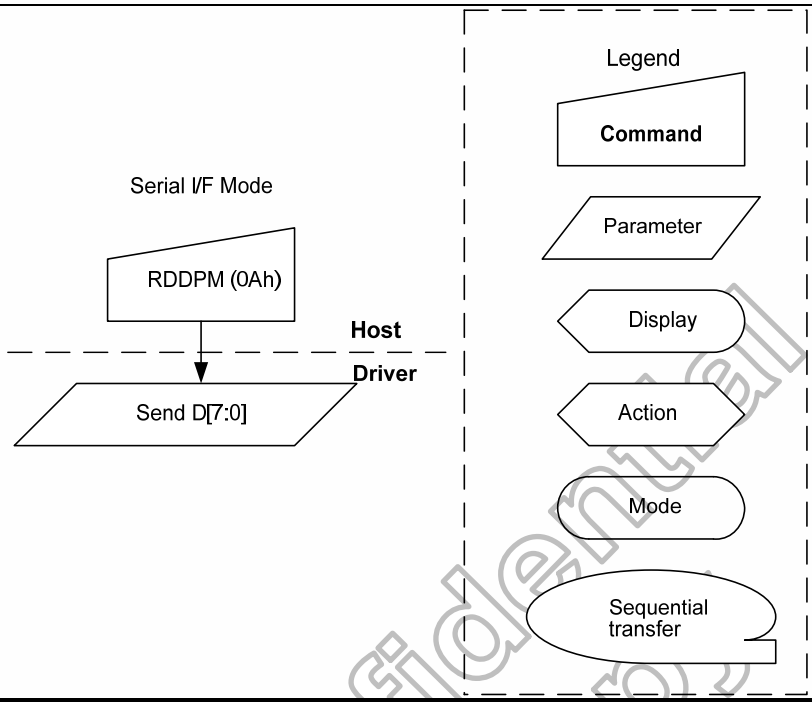

Himax Confidential
Do Not Copy

This information contained herein is the exclusive property of Himax and shall not be distributed, reproduced, or disclosed in whole or in part without prior written permission of Himax.

6.2.7 Read Display MADCTL (0Bh)

0B H	RDDMADCTL (Read Display MADCTL)									
	DNC	D7	D6	D5	D4	D3	D2	D1	D0	HEX
Command	0	0	0	0	0	1	0	1	1	0B
1st parameter	1	D[7:0]								xx

Description

This command indicates the current status of the display as described in the table below:

Bit	Description	Comment
D7	Page Address Order	Set to '0'
D6	Column Address Order	Set to '0'
D5	Page/Column Order	Set to '0'
D4	Line Address Order	Set to '0'
D3	RGB/BGR Order	
D2	Display Data Latch Order	Set to '0'
D1	Source scan sequence	
D0	Gate scan sequence	

Bit D7 – Page Address Order
This bit is not applicable for this project, so it is set to "0".
Bit D6 – Column Address Order
This bit is not applicable for this project, so it is set to "0".
Bit D5 – Page/Column Order
This bit is not applicable for this project, so it is set to "0".
Bit D4 – Line Address Order
This bit is not applicable for this project, so it is set to "0".

Bit D3 – RGB/BGR Order
'0' = RGB (When MADCTL B3='0').
'1' = BGR (When MADCTL B3='1').

Bit D2 – Display Data Latch Data Order
This bit is not applicable for this project, so it is set to "0".

Bit D1 – Source scan sequence
'0' = Normal (When MADCTL B1='0').
'1' = Flipped (When MADCTL B1='1').

Bit D0 – Gate scan sequence
'0' = Normal (When MADCTL B0='0').
'1' = Flipped (When MADCTL B0='1').

Restrictions

Register Availability

Status	Availability
Sleep Out	Yes
Sleep In or Booster Off	Yes

Default

Status	Default Value
Power On Sequence	00HEX
S/W Reset	00HEX
H/W Reset	00HEX

Himax Confidential
Do Not Copy

This information contained herein is the exclusive property of Himax and shall not be distributed, reproduced, or disclosed in whole or in part without prior written permission of Himax.

Flow Chart	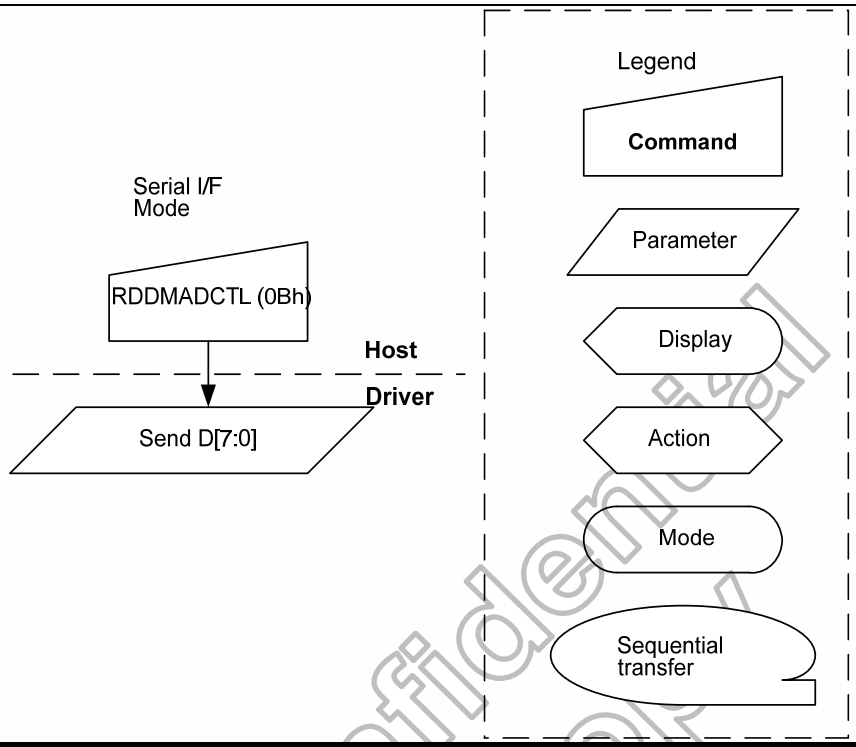

Himax Confidential
Do Not Copy

This information contained herein is the exclusive property of Himax and shall not be distributed, reproduced, or disclosed in whole or in part without prior written permission of Himax.

6.2.8 Read Display Pixel Format (0Ch)

0C H	RDDCOLMOD (Read Display COLMOD)									
	DNC	D7	D6	D5	D4	D3	D2	D1	D0	HEX
Command	0	0	0	0	0	1	1	0	0	0C
1st parameter	1	D[7:0]								xx

Description

This command indicates the current status of the display as described in the table below:

Bit	Description	Comment
D7	DPI Interface Pixel format	Set to '0'
D6		
D5		
D4		
D3	DBI Interface Pixel format	Set to '0'
D2		Set to '0'
D1		Set to '0'
D0		Set to '0'

Bits D7, D3 – Reserved
Bits D6, D5, D4 – DPI Interface Colour Pixel Format Definition
Bits D2, D1, D0 – DBI Interface Colour Pixel Format Definition.
This bit is not applicable for this project, so it is set to "0".

RGB Interface Format	D6	D5	D4
Not Defined	0	0	0
Not Defined	0	0	1
Not Defined	0	1	0
Not Defined	0	1	1
Not Defined	1	0	0
16 bit/pixel	1	0	1
18 bit/pixel	1	1	0
24 bit/pixel	1	1	1

Restrictions

Register Availability

Status	Availability
Sleep Out	Yes
Sleep In or Booster Off	Yes

Default

Status	Default Value
Power On Sequence	'70'h
S/W Reset	'70'h
H/W Reset	'70'h

Himax Confidential
Do Not Copy

This information contained herein is the exclusive property of Himax and shall not be distributed, reproduced, or disclosed in whole or in part without prior written permission of Himax.

Flow Chart	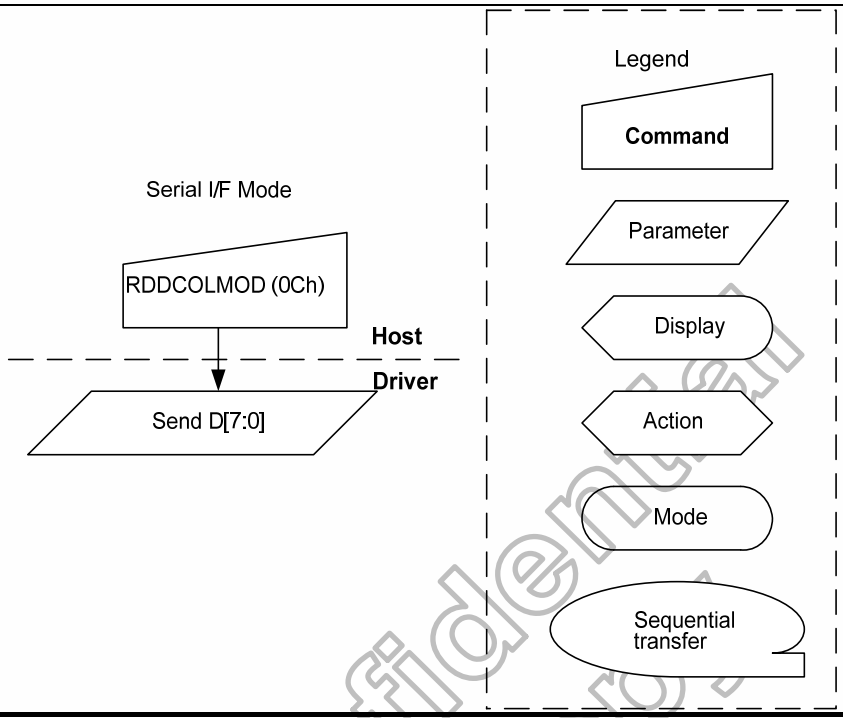

Himax Confidential
Do Not Copy

This information contained herein is the exclusive property of Himax and shall not be distributed, reproduced, or disclosed in whole or in part without prior written permission of Himax.

6.2.9 Read Display Image Mode (0Dh)

0D H	RDDIM (Read Display Image Mode)									
	DNC	D7	D6	D5	D4	D3	D2	D1	D0	HEX
Command	0	0	0	0	0	1	1	0	1	0D
1st parameter	1	D[7:0]								xx

Description

This command indicates the current status of the display as described in the table below:
Bit D7 – Vertical Scrolling On/Off
This bit is not applicable for this project, so it is set to '0'
Bit D6 – Reserved set to '0'
Bit D5 – Inversion On/Off
'0' = Inversion is Off.
'1' = Inversion is On.
Bits D4, D3 – Reserved set to '0'
Bits D2, D1, D0 – Gamma Curve Selection

Gamma Curve Selected	D2	D1	D0	Gamma Set (26h) Parameter
Gamma Curve 1	0	0	0	GC0
Gamma Curve 2	0	0	1	GC1
Gamma Curve 3	0	1	0	GC2
Gamma Curve 4	0	1	1	GC3
Not Defined	1	0	0	Not Defined
Not Defined	1	0	1	Not Defined
Not Defined	1	1	0	Not Defined
Not Defined	1	1	1	Not Defined

Restrictions

Register Availability

Status	Availability
Sleep Out	Yes

Default

Status	Default Value
Power On Sequence	00HEX
S/W Reset	00HEX
H/W Reset	00HEX

Flow Chart

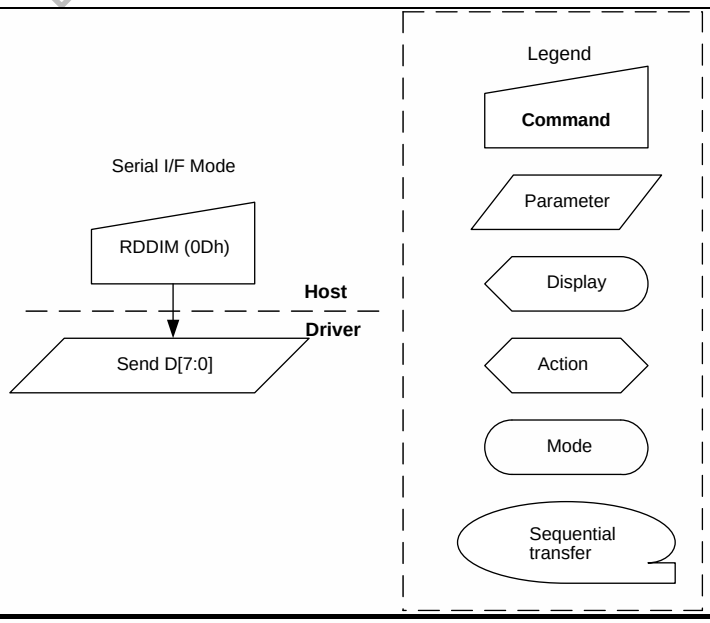

Himax Confidential
Do Not Copy

6.2.10 Read Display Signal Mode (0Eh)

0E H	RDDSM (Read Display Signal Mode)									
	DNC	D7	D6	D5	D4	D3	D2	D1	D0	HEX
Command	0	0	0	0	0	1	1	1	0	0F
1st parameter	1	D[7:0]								xx
Description	This command indicates the status of the display self-diagnostic results after Sleep Out –command as described in the table below: • Bit D5 – Horizontal Sync. (RGB I/F) On/Off. '0' = Horizontal Sync. line is Off ("Low"). '1' = Horizontal Sync. line is On ("High"). • Bit D4 – Vertical Sync. (RGB I/F) On/Off. '0' = Vertical Sync. line is Off ("Low"). '1' = Vertical Sync. line is On ("High"). • Bit D3 – Pixel Clock (PCLK, RGB I/F) On/Off. '0' = PCLK line is Off ("Low"). '1' = PCLK line is On ("High"). • Bit D2 – Data Enable (DE, RGB I/F)) On/Off. '0' = DE line is Off ("Low"). '1' = DE line is On ("High"). • D7, D6, D1 are D0 – are for future use and are set to '0'.									
Restrictions										
Register Availability										

Status	Availability
Sleep Out	Yes
Sleep In or Booster Off	Yes

Default	
Status	Default Value
Power On Sequence	00HEX
S/W Reset	00HEX
H/W Reset	00HEX

Himax Confidential
Do Not Copy

This information contained herein is the exclusive property of Himax and shall not be distributed, reproduced, or disclosed in whole or in part without prior written permission of Himax.

Flow Chart

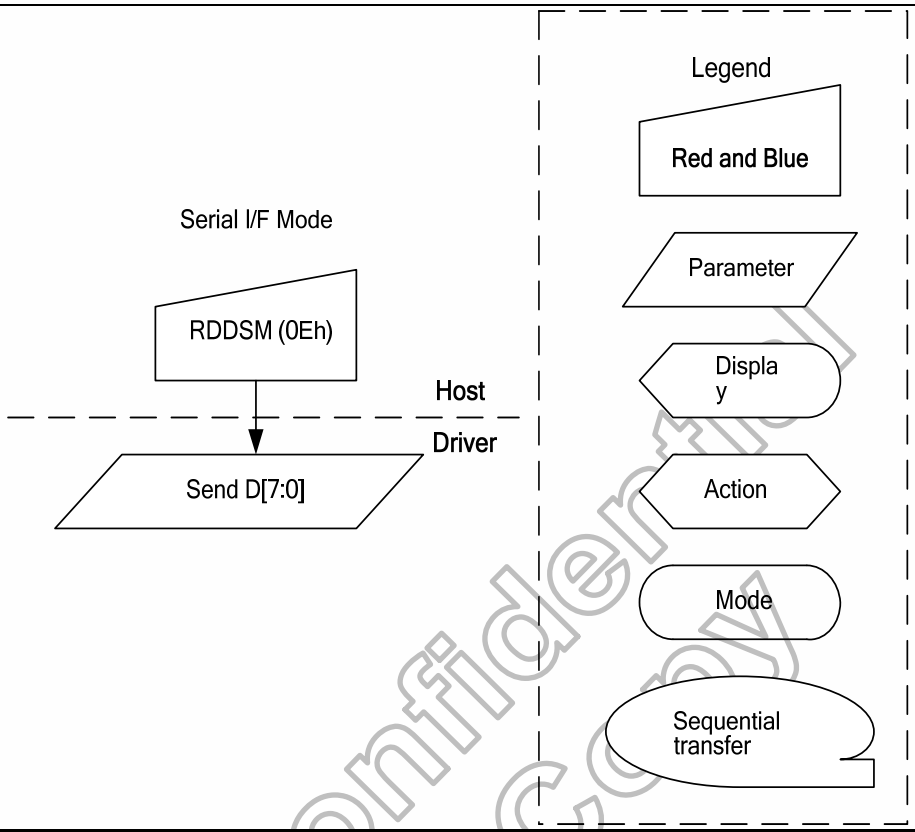

Himax Confidential
Do Not Copy

This information contained herein is the exclusive property of Himax and shall not be distributed, reproduced, or disclosed in whole or in part without prior written permission of Himax.

6.2.11 Read Display Self-Diagnostic Result (0Fh)

0F H	RDDSDR (Read Display Self-Diagnostic Result)									
	DNC	D7	D6	D5	D4	D3	D2	D1	D0	HEX
Command	0	0	0	0	0	1	1	1	1	0F
1st parameter	1	D[7:0]								xx
Description	This command indicates the status of the display self-diagnostic results after Sleep Out –command as described in the table below: Bit D7 – Register Loading Detection Bit D6 – Functionality Detection Bit D5 – Chip Attachment Detection Set to '0' if feature unimplemented. Bit D4 – Display Glass Break Detection Set to '0' if feature unimplemented. Bits D[3:0] – Reserved Set to '0'.									
Restrictions										
Register Availability										

Status	Availability
Sleep Out	Yes
Sleep In or Booster Off	Yes

Default

Status	Default Value
Power On Sequence	00HEX
S/W Reset	00HEX
H/W Reset	00HEX

Flow Chart

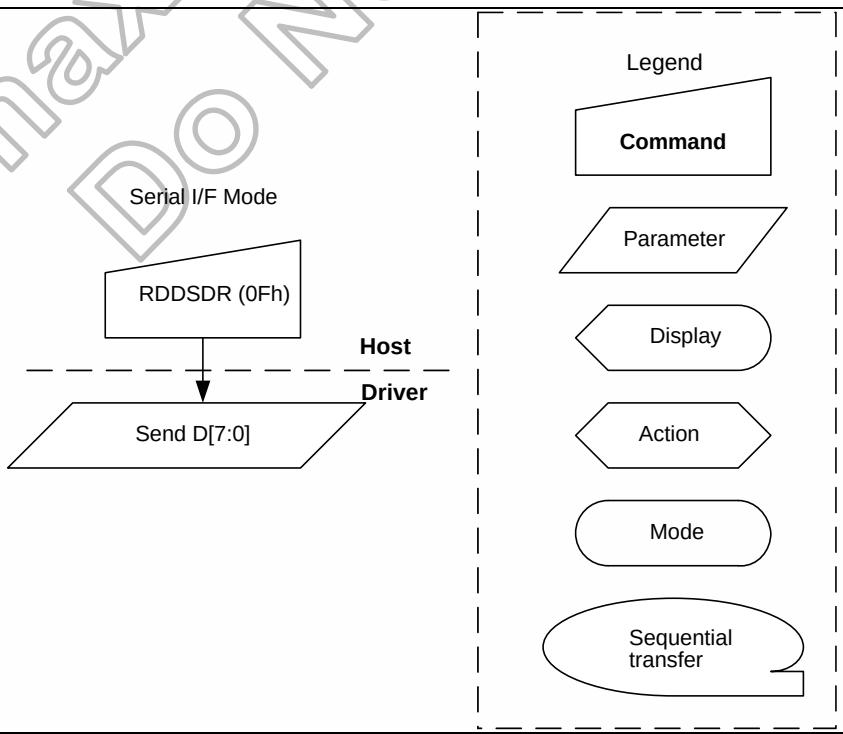

Himax Confidential
Do Not Copy

This information contained herein is the exclusive property of Himax and shall not be distributed, reproduced, or disclosed in whole or in part without prior written permission of Himax.

6.2.12 Sleep In (10h)

10 H	SLPIN (Sleep In)									
	DNC	D7	D6	D5	D4	D3	D2	D1	D0	HEX
Command	0	0	0	0	1	0	0	0	0	10
Parameter	NO PARAMETER									
Description	This command is used to enter the Sleep in mode.									
Restriction	This command has no effect when module is already in sleep in mode. Sleep In Mode can only be left by the Sleep Out Command (11h). It will be necessary to wait 5msec before sending next command. This is to allow time for the supply voltages and clock circuits to stabilise. It will be necessary to wait 120msec after sending Sleep Out command (when in Sleep In Mode) before Sleep In command can be sent.									
Register Availability	Status: Sleep Out — Availability: Yes Status: Sleep In — Availability: Yes									
Default	Status: Power On Sequence — Default Value: Sleep in mode Status: S/W Reset — Default Value: Sleep in mode									
Flow Chart	It takes 120msec to get into Sleep In mode after SLPIN command issued.									

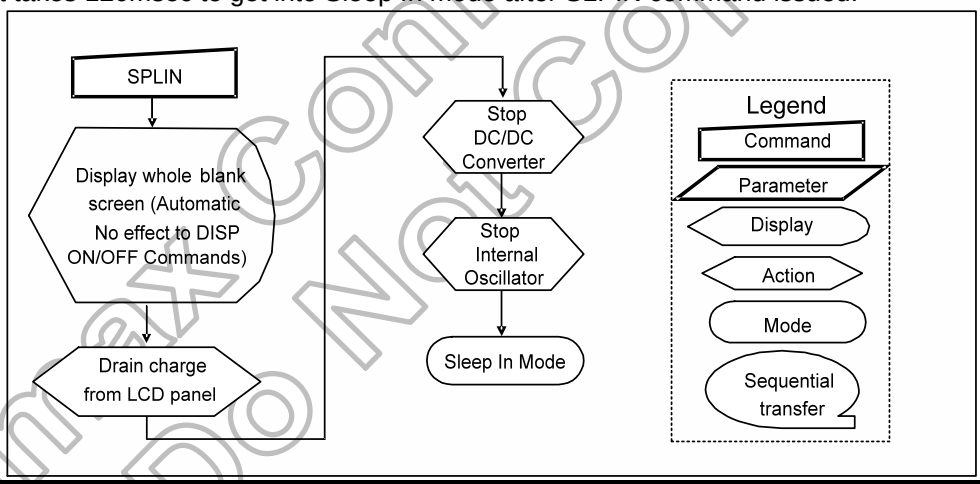

Himax Confidential
Do Not Copy

6.2.13 Sleep Out (11h)

11 H	SLPOUT (Sleep Out)									
	DNC	D7	D6	D5	D4	D3	D2	D1	D0	HEX
Command	0	0	0	0	1	0	0	0	1	11
Parameter	NO PARAMETER									
Description	This command turns off sleep mode.									
Restriction	This command has no effect when module is already in sleep out mode. Sleep Out Mode can only be left by the Sleep In Command (10h). It will be necessary to wait 5msec before sending next command. This is to allow time for the supply voltages and clock circuits to stabilise. The display module loads all display supplier's factory default values to the registers during this 5msec and there cannot be any abnormal visual effect on the display image if factory default and register values are same when this load is done and when the display module is already Sleep Out –mode. The display module is doing self-diagnostic functions during this 5msec. It will be necessary to wait 120msec after sending Sleep In command (when in Sleep Out mode) before Sleep Out command can be sent.									
Register Availability	Status: Sleep Out — Availability: Yes Status: Sleep In — Availability: Yes									
Default	Status: Power On Sequence — Default Value: Sleep In Mode Status: S/W Reset — Default Value: Sleep In Mode									
Flow Chart	It takes 120msec to become Sleep Out mode after SLPOUT command issued.									

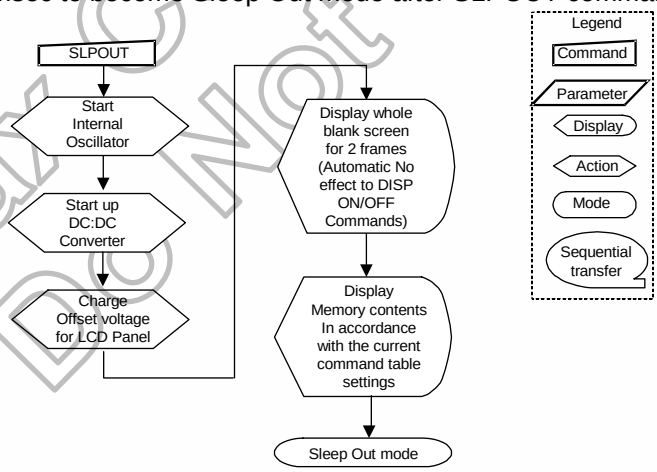

Himax Confidential
Do Not Copy

6.2.14 Display Inversion Off (20h)

20 H	INVOFF (Display Inversion Off)									
	DNC	D7	D6	D5	D4	D3	D2	D1	D0	HEX
Command	0	0	0	1	0	0	0	0	0	20
Parameter	NO PARAMETER									
Description	This command is used to recover from display inversion mode. This command makes no change of contents of image data. This command does not change any other status. (Example) (Example) RGB I/F 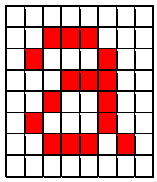 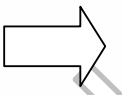 Display 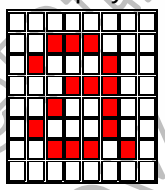									
Restriction	This command has no effect when module is already in inversion off mode.									
Register Availability	Status: Sleep Out — Availability: Yes									
Default	Status — Default Value Power On Sequence — Display Inversion off S/W Reset — Display Inversion off H/W Reset — Display Inversion off									
Flow Chart	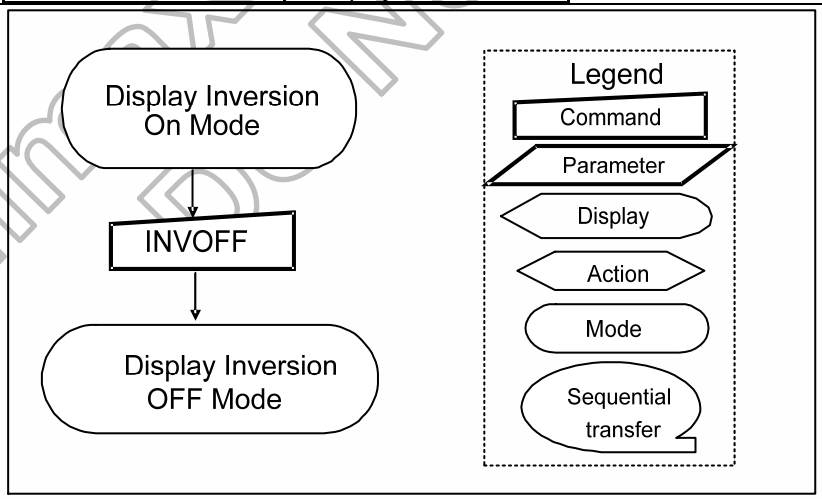									

Himax Confidential
Do Not Copy

6.2.15 Display Inversion On (21h)

21 H	INVON (Display Inversion On)									
	DNC	D7	D6	D5	D4	D3	D2	D1	D0	HEX
Command	0	0	0	1	0	0	0	0	1	21
Parameter	NO PARAMETER									
Description	This command is used to enter into display inversion mode. This command makes no change of contents of image data. Every bit is inverted from the RGB I/F to the display. This command does not change any other status. (Example) RGB I/F display 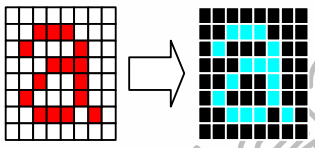									
Restriction	This command has no effect when module is already in inversion on mode.									
Register Availability	Status: Sleep Out — Availability: Yes									
Default	Status / Default Value Power On Sequence / Display Inversion off S/W Reset / Display Inversion off H/W Reset / Display Inversion off									
Flow Chart	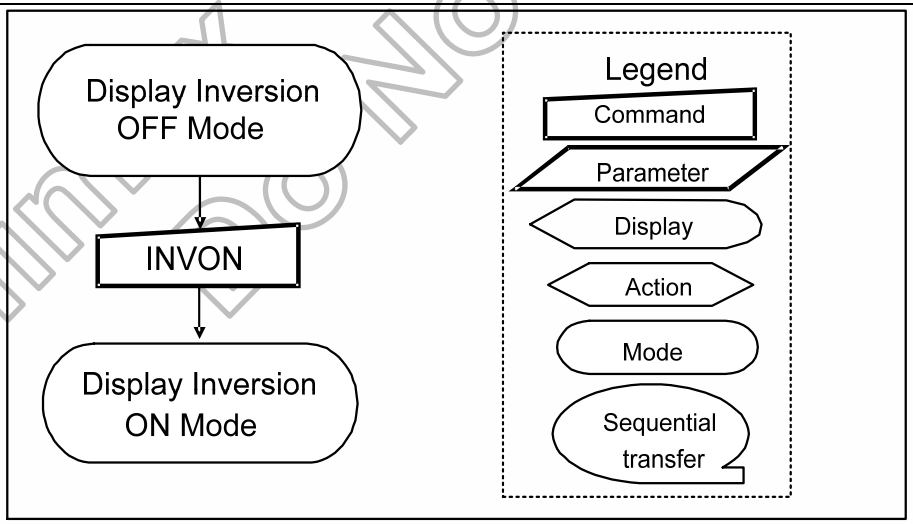									

Himax Confidential Do Not Copy

6.2.16 Gamma Set (26h)

26 H	GAMSET (Gamma Set)									
	DNC	D7	D6	D5	D4	D3	D2	D1	D0	HEX
Command	0	0	0	1	0	0	1	1	0	26
Parameter	1	GC[7:0]								1..08

Description

This command is used to select the desired Gamma curve for the current display. A maximum of 4 fixed gamma curves can be selected. The curves are defined in Section Curve Correction Power Supply Circuit. The curve is selected by setting the appropriate bit in the parameter as described in the Table:

GC[7..0]	Parameter	Curve Selected
01h	GC0	Gamma Curve 1
02h	GC1	Gamma Curve 2
04h	GC2	Gamma Curve 3
08h	GC3	Gamma Curve 4

Note: All other values are undefined.

Restriction

Values of GC[7..0] not shown in table above are invalid and will not change the current selected Gamma curve until valid value is received.

Register Availability

Status	Availability
Sleep Out	Yes

Default

Status	Default Value
Power On Sequence	01HEX
S/W Reset	01HEX
H/W Reset	01HEX

Flow Chart

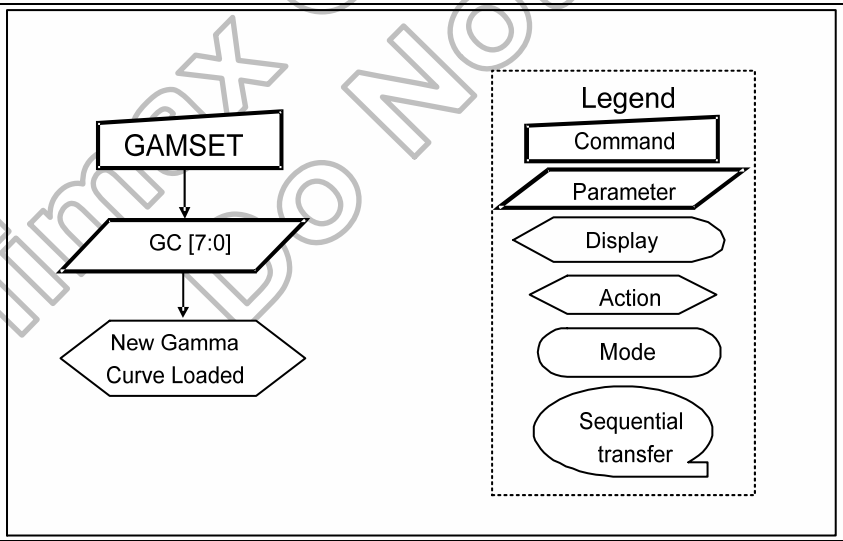

Himax Confidential Do Not Copy

This information contained herein is the exclusive property of Himax and shall not be distributed, reproduced, or disclosed in whole or in part without prior written permission of Himax.

6.2.17 Display Off (28h)

28 H	DISPOFF (Display Off)									
	DNC	D7	D6	D5	D4	D3	D2	D1	D0	HEX
Command	0	0	0	1	0	1	0	0	0	28
Parameter	NO PARAMETER									
Description	This command is used to enter into DISPLAY OFF mode. In this mode, the output from RGB I/F is disabled and blank page inserted. This command makes no change of contents of RGB I/F. This command does not change any other status. There will be no abnormal visible effect on the display. Example RGB I/F 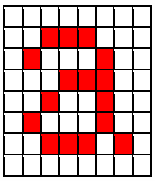 Display 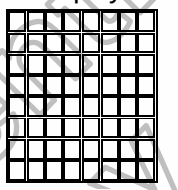									
Restriction	This command has no effect when module is already in display off mode.									
Register Availability	Status: Sleep Out Availability: Yes									
Default	Status / Default Value Power On Sequence: Display off S/W Reset: Display off H/W Reset: Display off									
Flow Chart	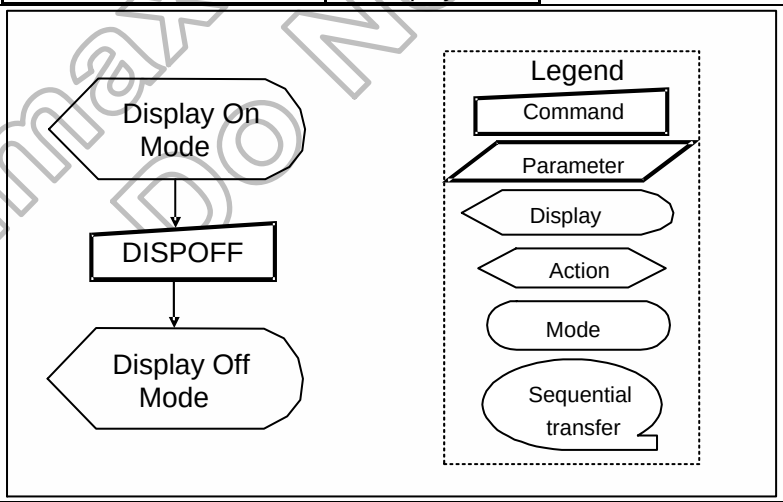									

Himax Confidential
Do Not Copy

6.2.18 Display On (29h)

29 H	DISPON (Display On)									
	DNC	D7	D6	D5	D4	D3	D2	D1	D0	HEX
Command	0	0	0	1	0	1	0	0	1	29
Parameter	NO PARAMETER									
Description	This command is used to recover from DISPLAY OFF mode. Output from the RGB I/F is enabled. This command makes no change of contents of image data This command does not change any other status. (Example) 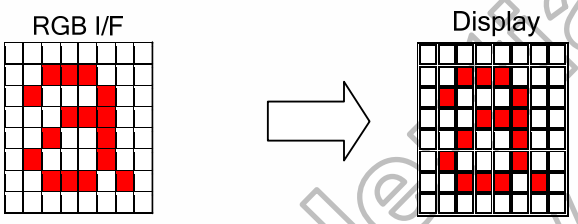 									
Restriction	This command has no effect when module is already in display on mode.									
Register Availability	Status: Sleep Out — Availability: Yes									
Default	Status: Power On Sequence — Default Value: Display off Status: S/W Reset — Default Value: Display off Status: H/W Reset — Default Value: Display off									
Flow Chart	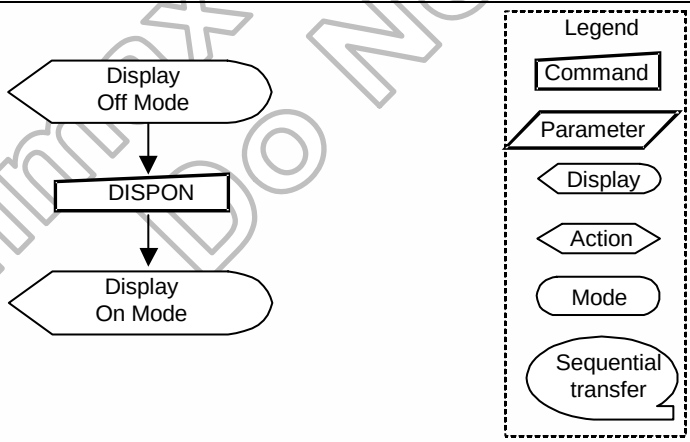 									

Himax Confidential
Do Not Copy

6.2.19 Memory Access Control (36h)

36 H	MADCTL (Memory Access Control)									
	DNC	D7	D6	D5	D4	D3	D2	D1	D0	HEX
Command	0	0	0	1	1	0	1	1	0	36
1st parameter	1	xx	xx	xx	xx	BGR	xx	SS	GS	XX

Description

This command defines write scanning direction of LCD.
Bit Assignment

BIT	NAME	DESCRIPTION
B7	PAGE ADDRESS ORDER	This bit is not applicable for this project, so it is set to “0”.
B6	COLUMN ADDRESS ORDER	This bit is not applicable for this project, so it is set to “0”.
B5	PAGE/COLUMN SELECTION	This bit is not applicable for this project, so it is set to “0”.
B4	Display Device Line Refresh Order	This bit is not applicable for this project, so it is set to “0”.
B3	RGB-BGR ORDER (BGR)	Colour selector switch control (0=RGB colour filter panel, 1=BGR colour filter panel)
B2	Display Data Latch Data Order	This bit is not applicable for this project, so it is set to “0”.
B1	Flip Horizontal (Source scan sequence)	Select the Source driver scan direction on panel module
B0	Flip Vertical (Gate scan sequence)	Select the Gate driver scan direction on panel module

Source scan sequence (SS)

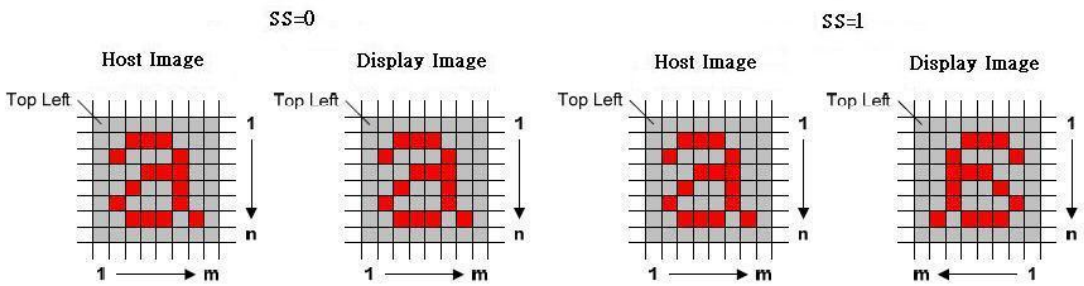

Gate scan sequence (GS)

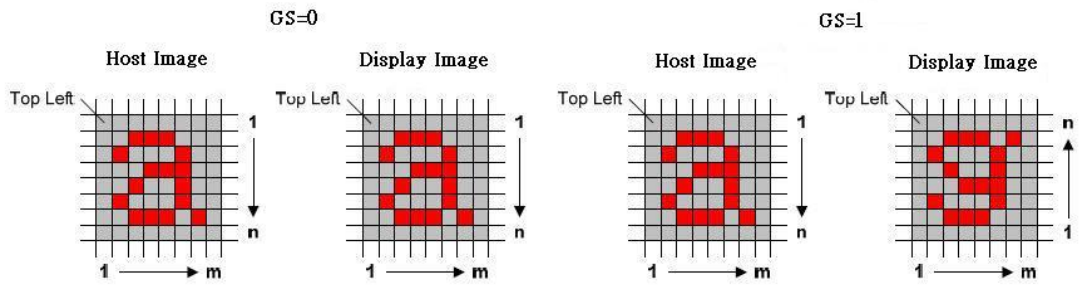

Himax Confidential
Internal Copy

	RGB-BGR Order 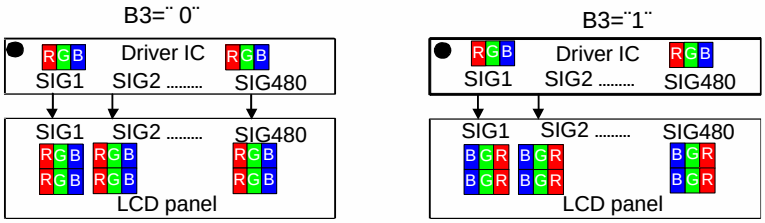
Restriction	D5, D4, D2, D1, and D0 of the 1st parameter are set to ‘0’ internally.
Register Availability	Status: Sleep Out Availability: Yes
Default	Status: Power On Sequence Default Value: B7=0,B6=0,B5=0,B4=0,B3=0,B2=0,B1=0,B0=0 Status: S/W Reset Default Value: No Change
Flow Chart	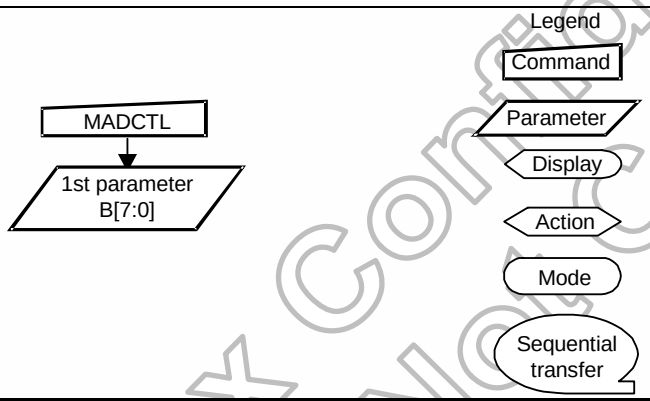

Himax Confidential
Do Not Copy

This information contained herein is the exclusive property of Himax and shall not be distributed, reproduced, or disclosed in whole or in part without prior written permission of Himax.

6.2.20 Interface Pixel Format (3Ah)

3A H	COLMOD (Interface Pixel Format)									
	DNC	D7	D6	D5	D4	D3	D2	D1	D0	HEX
Command	0	0	0	1	1	1	0	1	0	3A
1st parameter	1	xx	CSEL_RGB[2:0]			xx	xx	xx	xx	011,101, 110,111

Description

This command is used to define the format of RGB picture data. The formats are shown in the following table:
D6~D4 : DPI Pixel format Definition.
D2~D0 : DBI Pixel format Definition.
This bit is not applicable for this project, so it is set to "0".

RGB Interface Format	D6	D5	D4
Not Defined	0	0	0
Not Defined	0	0	1
Not Defined	0	1	0
Not Defined	0	1	1
Not Defined	1	0	0
16 bit/pixel	1	0	1
18 bit/pixel	1	1	0
24 bit/pixel	1	1	1

Restriction

There is no visible effect until the image data is written to.

Register Availability

Status	Availability
Sleep Out	Yes

Default

Status	Default Value
Power On Sequence	'07'h
S/W Reset	'07'h

Flow Chart

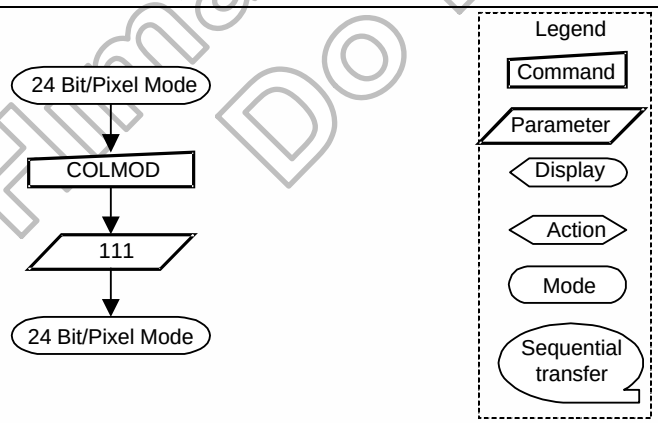

Himax Confidential
Do Not Copy

6.2.21 Read_DDB_start (A1h)

A1 H	Read_DDB_start									
	DNC	D7	D6	D5	D4	D3	D2	D1	D0	HEX
Command	0	1	0	1	0	0	0	0	1	A1
1st parameter	1	ID1[7:0]								xx
2nd parameter	1	ID2[7:0]								xx
3rd parameter	1	ID3[7:0]								xx
4th parameter	1	ID4[7:0]								xx
5th parameter	1	1	1	1	1	1	1	1	1	xx

Description

This command reads identifying and descriptive information from the peripheral. This information is organized in the Device Descriptor Block (DDB) stored on the peripheral. The response to this command returns a sequence of bytes that may be any length up to 64K bytes. Note that the returned sequence of bytes does not necessarily correspond to the entire DDB; it may be a portion of a larger block of data.
The format of returned data is as follows:
Parameter 1: MS (most significant) byte of Supplier ID. Supplier ID is a unique value assigned to each peripheral supplier by the MIPI organization.
Parameter 2: LS (least significant) byte of Supplier ID.
Parameter 3: MS (most significant) byte of Supplier Elective Data. This is a byte of information that is determined by the supplier. It could include model number or revision information, for example.
Parameter 4: LS (least significant) byte of Supplier Elective Data
Parameter 5: single-byte *Escape or Exit Code* (EEC). The code is interpreted as follows:
- FFh - Exit code – there is no more data in the Descriptor Block

Restriction

Register Availability

Status	Availability
Sleep Out	Yes

Default

Status	Default Value
Power On Sequence	TBDHEX
S/W Reset	TBDHEX

Flow Chart

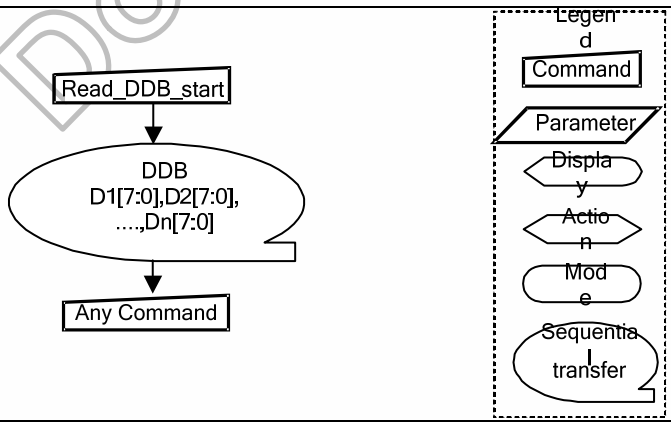

Himax Confidential
Do Not Copy

6.2.22 Read_DDB_continue (A8h)

A8 H	Read_DDB_continue									
	DNC	D7	D6	D5	D4	D3	D2	D1	D0	HEX
Command	0	1	0	1	0	1	0	0	0	A8
1st parameter	1	DDB_DATA								xx
Description	A read_DDB_start command should be executed at least once before a read_DDB_continue command to define the read location. Otherwise, data read with a read_DDB_continue command is undefined.									
Restriction	There is no visible effect until the image data is written to.									
Register Availability	Status: Sleep Out; Availability: Yes									
Default	Status: Power On Sequence, Default Value: TBDHEX Status: S/W Reset, Default Value: TBDHEX									
Flow Chart	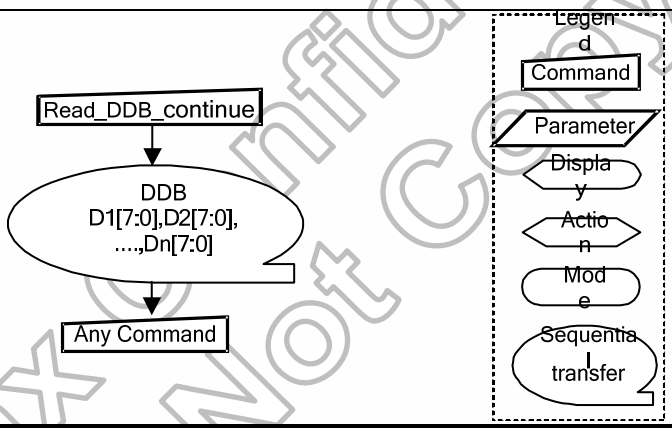									

Himax Confidential
Do Not Copy

6.2.23 Read ID1 (DAh)

DA H	RDID1 (Read ID1)									
	DNC	D7	D6	D5	D4	D3	D2	D1	D0	HEX
Command	0	1	1	0	1	1	0	1	0	DA
1st parameter	1	module's manufacturer[7:0]								xx
Description	This read byte identifies the LCD module's manufacturer. It is specified by display supplier and for xx is defined as xxHEX.									
Restriction										

Register Availability

Status	Availability
Sleep Out	Yes
Sleep In or Booster Off	Yes

Default

Status	Default Value
Power On Sequence	OTP value
S/W Reset	OTP value

Flow Chart

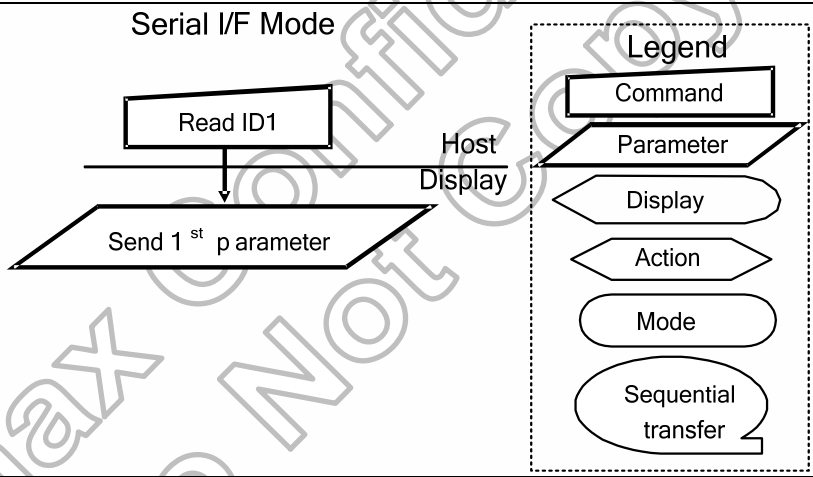

Himax Confidential
Do Not Copy

6.2.24 Read ID2 (DBh)

DB H	RDID2 (Read ID2)									
	DNC	D7	D6	D5	D4	D3	D2	D1	D0	HEX
Command	0	1	1	0	1	1	0	1	1	DB
1st parameter	1	1	LCD module/driver version [6:0]							-

Description

This read byte is used to track the LCD module/driver version. It is defined by display supplier and changes each time a revision is made to the display, material or construction specifications. See Table:

ID Byte Value V[7:0]	Version	Changes
80h		
81h		
82h		
83h		
84h		
85h		

X= Don't care

Restrictions

Register Availability

Status	Availability
Sleep Out	Yes
Sleep In or Booster Off	Yes

Default

Status	Default Value
Power On Sequence	OTP value
S/W Reset	OTP value

Flow Chart

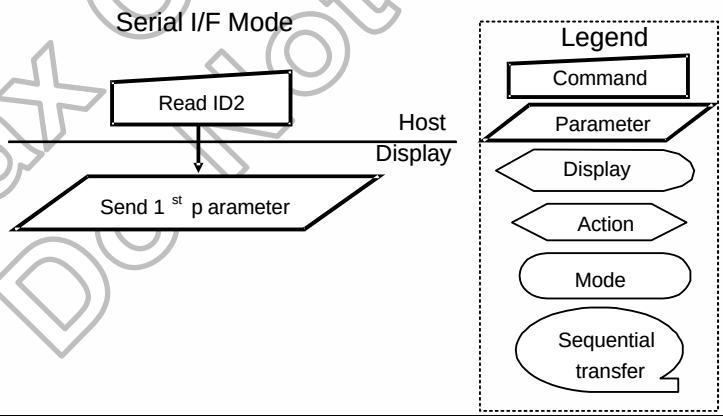

Himax Confidential
Do Not Copy

This information contained herein is the exclusive property of Himax and shall not be distributed, reproduced, or disclosed in whole or in part without prior written permission of Himax.

6.2.25 Read ID3 (DCh)

DC H	RDID3 (Read ID3)									
	DNC	D7	D6	D5	D4	D3	D2	D1	D0	HEX
Command	0	1	1	0	1	1	1	0	0	DC
1st parameter	1	LCD module/driver ID[7:0]								xx
Description	This read byte identifies the LCD module/driver. It is specified by display supplier and for this LCD project module is defined as xxHEX.									
Restrictions										

Register Availability

Status	Availability
Sleep Out	Yes
Sleep In or Booster Off	Yes

Default

Status	Default Value
Power On Sequence	OTP value
S/W Reset	OTP value
H/W Reset	OTP value

Flow Chart

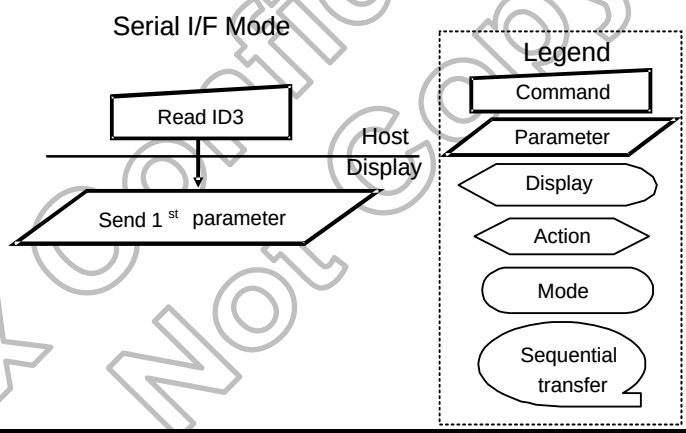

Himax Confidential
Do Not Copy

This information contained herein is the exclusive property of Himax and shall not be distributed, reproduced, or disclosed in whole or in part without prior written permission of Himax.

6.2.26 Write Display Brightness (51h)

51 H	WRDISBV (Write Display Brightness)									
	DNC	D7	D6	D5	D4	D3	D2	D1	D0	HEX
Command	0	0	1	0	1	0	0	0	1	51
1st parameter	1	WRDBV[7:0]								00 .. FF
Description	This command is used to adjust the brightness value of the display. It should be checked what the relationship between this written value and output brightness of the display is. This relationship is defined on the display module specification. In principle relationship is that 00h value means the lowest brightness and FFh value means the highest brightness.									
Restriction	The display supplier cannot use this command for tuning (e.g. factory tuning, etc.), because this command is only for Nokia.									
Register Availability										

Status	Availability
Sleep Out	Yes
Sleep In	Yes

Default

Status	Default Value
Power On Sequence	00h
S/W Reset	00h
H/W Reset	00h

Flow Chart

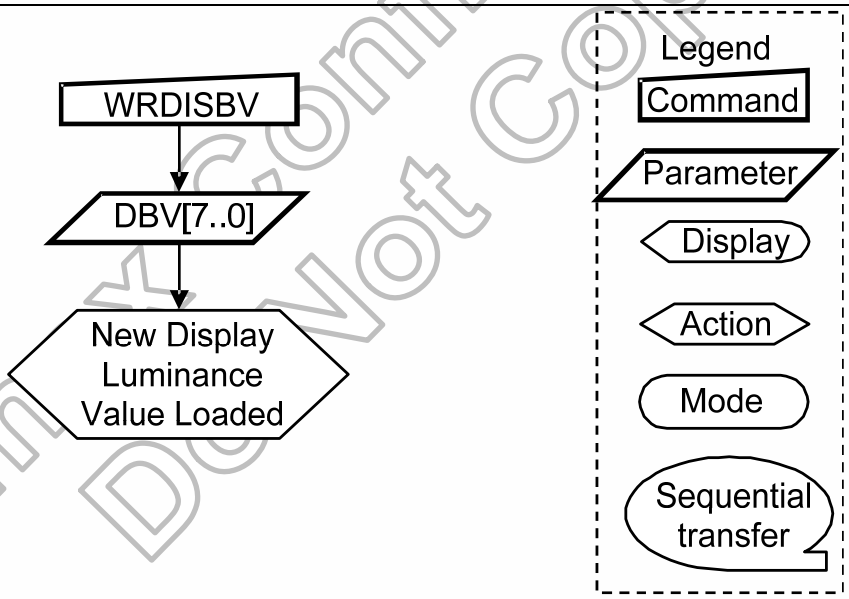

Himax Confidential Do Not Copy

This information contained herein is the exclusive property of Himax and shall not be distributed, reproduced, or disclosed in whole or in part without prior written permission of Himax.

6.2.27 Read Display Brightness Value (52h)

52 H	RDDISBV (Read Display Brightness Value)									
	DNC	D7	D6	D5	D4	D3	D2	D1	D0	HEX
Command	0	0	1	0	1	0	0	1	0	52
1st parameter	1	RDDBV[7:0]								xx

Description

This command returns the brightness value of the display.It should be checked what the relationship between this returned value and output brightness of the display. This relationship is defined on the display module specification is.
In principle the relationship is that 00h value means the lowest brightness and FFh value means the highest brightness.
See chapters: “Brightness Control Block”, Display configuration” and “Write Display Brightness (51h)” This command can be used to read the brightness value of the display also when Display brightness control is in automatic mode. See chapter “Write CTRL Display (53h)” bit DB = ‘1’.
DBV[7:0] is reset when display is in sleep-in mode.
DBV[7:0] is ‘0’ when bit BCTRL of “Write CTRL Display (53h)” command is ‘0’. DBV[7:0] is manual set brightness specified with “Write CTRL Display (53h)” command when bit BCTRL is ‘1’ and bit A of “Write CTRL Display (53h)” command is ‘0’.

Restriction

Register Availability

Status	Availability
Sleep Out	Yes
Sleep In	Yes

Default

Status	Default Value
Power On Sequence	00h
S/W Reset	00h
H/W Reset	00h

Flow Chart

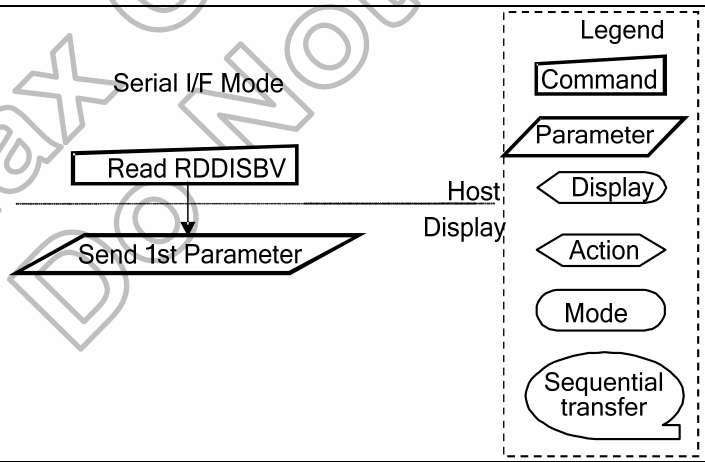

Himax Confidential
Do Not Copy

This information contained herein is the exclusive property of Himax and shall not be distributed, reproduced, or disclosed in whole or in part without prior written permission of Himax.

6.2.28 Write CTRL Display (53h)

53 H	WRCTRLD (Write Control Display)									
	DNC	D7	D6	D5	D4	D3	D2	D1	D0	HEX
Command	0	0	1	0	1	0	0	1	1	53
1st parameter	1	0	0	BCTRL	0	DD	BL	0	0	00 .. FF
Description	This command is used to control display brightness. BCTRL: Brightness Control Block On/Off, This bit is always used to switch brightness for display. 0 = Off (Brightness registers are 00h, DBV[7..0]) 1 = On (Brightness registers are active, according to the other parameters.) Display Dimming (DD): (Only for manual brightness setting) DD = 0: Display Dimming is off DD = 1: Display Dimming is on BL: Backlight Control On/Off 0 = Off (Completely turn off backlight circuit. Control lines must be low.) 1 = On Dimming function is adapted to the brightness registers for display when bit BCTRL is changed at DD=1, e.g. BCTRL: 0 -> 1 or 1-> 0. (Refer to “Turn Off Display Brightness”.) When BL bit change from “On” to “Off”, backlight is turned off without gradual dimming, even if dimming-on (DD=1) are selected. X = Don’t care.									
Restriction										
Register Availability										
Default										

Status	Availability
Sleep Out	Yes
Sleep In	Yes

Status	Default Value
Power On Sequence	00h
S/W Reset	00h
H/W Reset	00h

Himax Confidential
Do Not Copy

This information contained herein is the exclusive property of Himax and shall not be distributed, reproduced, or disclosed in whole or in part without prior written permission of Himax.

Flow Chart	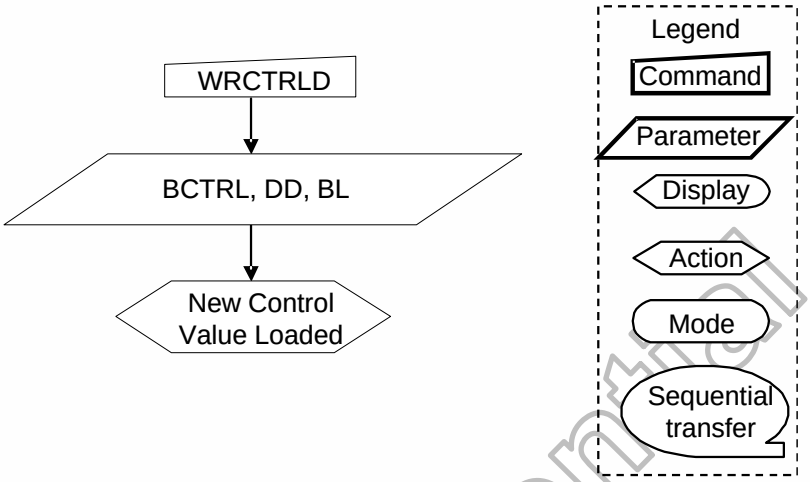

Himax Confidential
Do Not Copy

This information contained herein is the exclusive property of Himax and shall not be distributed, reproduced, or disclosed in whole or in part without prior written permission of Himax.

6.2.29 Read CTRL Value Display (54h)

54 H	RDCTRLD (Read Control Value Display)									
	DNC	D7	D6	D5	D4	D3	D2	D1	D0	HEX
Command	0	0	1	0	1	0	1	0	0	54
1st parameter	1	0	0	BCTRL	0	DD	BL	0	0	xx

Description

This command returns ambient light and brightness control values
BCTRL: Brightness Control Block On/Off, This bit is always used to switch brightness for display.
0 = Off
1 = On
Display Dimming (DD):
DD = 0: Display Dimming is off
DD = 1: Display Dimming is on
BL: Backlight Control On/Off
0 = Off (completely turn off backlight circuit)
1 = On

Restriction

Register Availability

Status	Availability
Sleep Out	Yes
Sleep In	Yes

Default

Status	Default Value
Power On Sequence	00h
S/W Reset	00h
H/W Reset	00h

Flow Chart

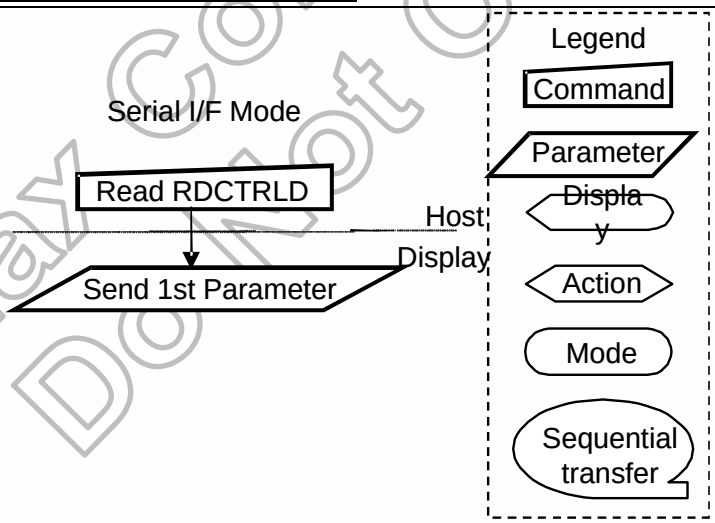

Himax Confidential
Do Not Copy

This information contained herein is the exclusive property of Himax and shall not be distributed, reproduced, or disclosed in whole or in part without prior written permission of Himax.

6.2.30 Write Content Adaptive Brightness Control (55h)

55 H	WRCABC (Write Content Adaptive Brightness Control)									
	DNC	D7	D6	D5	D4	D3	D2	D1	D0	HEX
Command	0	0	1	0	1	0	1	0	1	55
1st parameter	1	xx	xx	xx	xx	xx	xx	CABC[1:0](00)		xx

Description

This command is used to set parameters for image content based adaptive brightness control functionality. There is possible to use 4 different modes for content adaptive image functionality,

which are defined on a table below.C1	C0	Function	Note
0	0	Off	
0	1	User Interface Image	
1	0	Still Picture	
1	1	Moving Image	

X = Don't care.

Restriction

Register Availability

Status	Availability
Sleep Out	Yes
Sleep In	Yes

Default

Status	Default Value
Power On Sequence	00h
S/W Reset	00h
H/W Reset	00h

Flow Chart

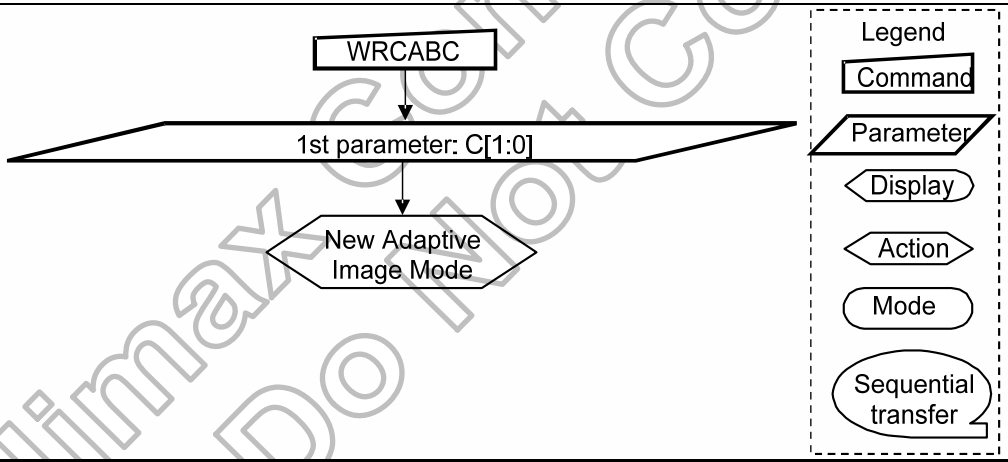

Himax Confidential
Do Not Copy

This information contained herein is the exclusive property of Himax and shall not be distributed, reproduced, or disclosed in whole or in part without prior written permission of Himax.

6.2.31 Read Content Adaptive Brightness Control (56h)

56 H	RDCABC (Read Content Adaptive Brightness Control)									
	DNC	D7	D6	D5	D4	D3	D2	D1	D0	HEX
Command	0	0	1	0	1	0	1	1	0	56
1st parameter	1	0	0	0	0	0	0	CABC[1:0]		xx

Description

This command is used to read the settings for image content based adaptive brightness control functionality. There is possible to use 4 different modes for content adaptive image functionality, which are defined on a table below.

C1	C0	Function	Note
0	0	Off	
0	1	User Interface Image	
1	0	Still Picture	
1	1	Moving Image	

Restriction

Register Availability

Status	Availability
Sleep Out	Yes
Sleep In	Yes

Default

Status	Default Value
Power On Sequence	00h
S/W Reset	00h

Flow Chart

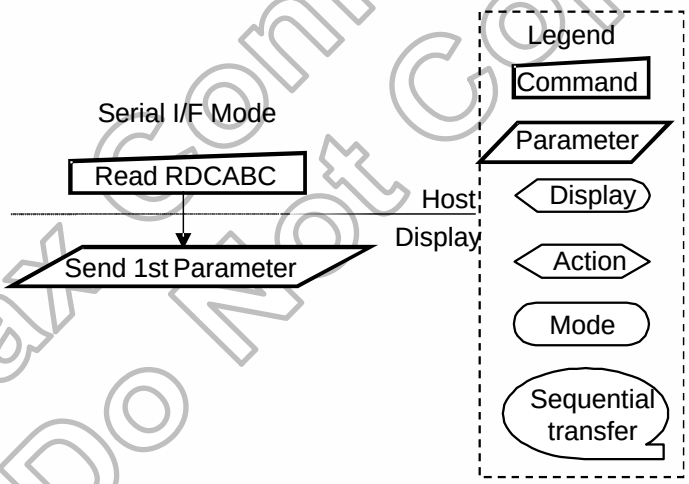

Himax Confidential
Do Not Copy

This information contained herein is the exclusive property of Himax and shall not be distributed, reproduced, or disclosed in whole or in part without prior written permission of Himax.

6.2.32 Write CABC minimum brightness (5Eh)

5E H	RDMFFSVM (Read Median Filtered FS Value MSBs)									
	DNC	D7	D6	D5	D4	D3	D2	D1	D0	HEX
Command	0	0	1	0	1	1	1	1	0	5E
1st parameter	1	CMB 7	CMB 6	CMB 5	CMB 4	CMB 3	CMB 2	CMB 1	CMB 0	00 .. FF
Description	This command is used to set the minimum brightness value of the display for CABC function. In principle relationship is that 00h value means the lowest brightness for CABC and FFh value means the highest brightness for CABC. See chapter “Minimum brightness setting of CABC function”.									
Restriction	The display supplier cannot use this command for tuning (e.g. factory tuning, etc.), because this command is only for Nokia.									
Register Availability	Status: Sleep Out — Availability: Yes Status: Sleep In — Availability: Yes									
Default	Status: Power On Sequence — Default Value: 00h Status: S/W Reset — Default Value: 00h Status: H/W Reset — Default Value: 00h									
Flow Chart	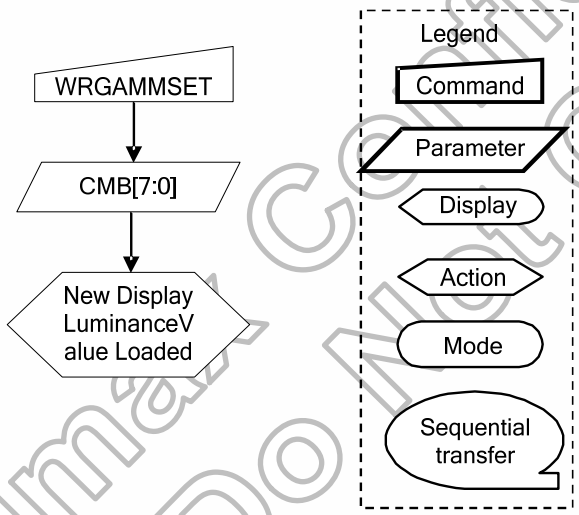									

Himax Confidential
Do Not Copy

6.2.33 Read CABC minimum brightness (5Fh)

5F H	RDCABCMB (Read CABC minimum brightness)									
	DNC	D7	D6	D5	D4	D3	D2	D1	D0	HEX
Command	0	0	1	0	1	1	0	1	1	5F
1st parameter	1	CMB[7:0]								XX
Description	This command returns the minimum brightness value of CABC function. In principle the relationship is that 00h value means the lowest brightness and FFh value means the highest brightness. See chapter "Minimum brightness setting of CABC function". CMB[7:0] is CABC minimum brightness specified with "Write CABC minimum brightness (5Eh)" command.									
Restriction										
Register Availability	Status: Sleep Out — Availability: Yes Status: Sleep In — Availability: Yes									
Default	Status: Power On Sequence — Default Value: 00h Status: S/W Reset — Default Value: 00h Status: H/W Reset — Default Value: 00h									
Flow Chart	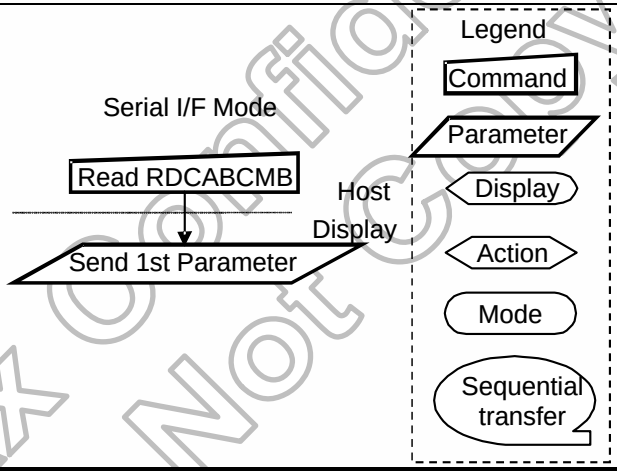									

Himax Confidential
Do Not Copy

6.2.34 SETPOWER: Set Power (B1h)

RB2 H	SETPOWER(Set power related setting)									
	D/NC	D7	D6	D5	D4	D3	D2	D1	D0	HEX
Command	**0**	1	0	1	1	0	0	0	1	B1
1st Parameter	**1**	-	VSN_EN	VSP_EN	VGL_EN	VGH_EN	-	VDDDN_HZ	SLP	
2nd Parameter	**1**	-	FS12	FS11	FS10	-	AP2	AP1	AP0	
3rd Parameter	**1**	-	-	-	-	BT3	BT2	BT1	BT0	
4th Parameter	**1**	DT1	DT0	DC1	DC0	DC_DIV3	DC_DIV2	DC_DIV1	DC_DIV0	
5th Parameter	**1**	-	DTPS2	DTPS1	DTPS0	-	DTP2	DTP1	DTP0	
6th Parameter	**1**	-	DTNS2	DTNS1	DTNS0	-	DTN2	DTN1	DTN0	
7th Parameter	**1**	-	-	-	BTP4	BTP3	BTP2	BTP1	BTP0	
8th Parameter	**1**	-	-	-	BTN4	BTN3	BTN2	BTN1	BTN0	
9th Parameter	**1**	VRHP7	VRHP6	VRHP5	VRHP4	VRHP3	VRHP2	VRHP1	VRHP0	
10th Parameter	**1**	VRHN7	VRHN6	VRHN5	VRHN4	VRHN3	VRHN2	VRHN1	VRHN0	
11th Parameter	**1**	-	-	VRMP5	VRMP4	VRMP3	VRMP2	VRMP1	VRMP0	
12th Parameter	**1**	-	-	VRMN5	VRMN4	VRMN3	VRMN2	VRMN1	VRMN0	

Description

This command is used to set related setting of power.

VSP_EN: ON/OFF the operation of VSP circuit.

VSP_EN	Operation of VSP DC/DC circuit
0	OFF
1	ON

VSN_EN: ON/OFF the operation of VSN circuit.

VSN_EN	Operation of VSN DC/DC circuit
0	OFF
1	ON

VGH_EN: ON/OFF the operation of VGH charge bump circuit.

VGH_EN	Operation of VGH charge bump circuit
0	OFF
1	ON

Himax Confidential
Do Not Copy

This information contained herein is the exclusive property of Himax and shall not be distributed, reproduced, or disclosed in whole or in part without prior written permission of Himax.

VGL_EN : ON/OFF the operation of VGL charge bump circuit.

VGL_EN	Operation of VGL charge bump circuit
0	OFF
1	ON

BT3	BT2	BT1	BT0	VGH	VGL
0	0	0	0	2*(VSP-VSN)	VDDDN-1*(VSP-VSN)
0	0	0	1	2*(VSP-VSN)	-1*(VSP-VSN)
0	0	1	0	2*(VSP-VSN)	VDD3-1*(VSP-VSN)
0	0	1	1	1*(VSP-VSN)+(VDD3-VSN)	VDDDN-1*(VSP-VSN)
0	1	0	0	1*(VSP-VSN)+(VDD3-VSN)	-1*(VSP-VSN)
0	1	0	1	1*(VSP-VSN)+(VDD3-VSN)	VDD3-1*(VSP-VSN)
0	1	1	0	1*(VSP-VSN)+(VSSD-VSN)	VDDDN-1*(VSP-VSN)
0	1	1	1	1*(VSP-VSN)+(VSSD-VSN)	-1*(VSP-VSN)
1	0	0	0	1*(VSP-VSN)+(VSSD-VSN)	VDD3-1*(VSP-VSN)
1	0	0	1	Inhibited	Inhibited
1	0	1	0	Inhibited	Inhibited
1	0	1	1	Inhibited	Inhibited
1	1	0	0	Inhibited	Inhibited
1	1	0	1	Inhibited	Inhibited
1	1	1	0	Inhibited	Inhibited
1	1	1	1	Inhibited	Inhibited

FS1[2:0]: Set the operating frequency of the step-up circuit 2 for VGH and VGL voltage generation.

FS12	FS11	FS10	Operation Frequency of Step-up Circuit 2 , Step-up Circuit 3
0	0	0	Fosc/32
0	0	1	Fosc/64
0	1	0	Fosc/128
0	1	1	Fosc/256
1	0	0	Fosc/512
1	0	1	Fosc/1024
1	1	0	Fosc/2048
1	1	1	Fosc/4096

VDDDN_HZ: Choose external or internal VDDDN power.

VDDDN_HZ=0, VDDDN= -2.5V.
VDDDN_HZ=1, VDDDN output HZ. (For external VDDDN.)

Himax Confidential
Do Not Copy

This information contained herein is the exclusive property of Himax and shall not be distributed, reproduced, or disclosed in whole or in part without prior written permission of Himax.

DCDIV[3:0]: Set the normal operate frequency of DC/DC converter circuit during normal mode.

DCDIV3	DCDIV2	DCDIV1	DCDIV0	Normal operate frequency of DC/DC converter
0	0	0	0	Fosc / 1
0	0	0	1	Fosc / 2
0	0	1	0	Fosc / 4
0	0	1	1	Fosc / 8
0	1	0	0	Fosc / 16
0	1	0	1	Fosc / 32
0	1	1	0	Fosc / 64
0	1	1	1	Fosc
1	0	0	0	Fosc / 1
1	0	0	1	Fosc / 3
1	0	1	0	Fosc / 6
1	0	1	1	Fosc / 12
1	1	0	0	Fosc / 24
1	1	0	1	Fosc / 48
1	1	1	0	Fosc / 96
1	1	1	1	Fosc

DC[1:0]: Set the operating frequency of DC/DC clock for the internal DC/DC circuit
When using the higher frequency, the driving ability of the DC/DC circuit and the display quality are high, but the current consumption is increased. The tradeoff is between the display quality and the current consumption.

foscD = Divided oscillator frequency

DC1	DC0	Operation Frequency of DC/DC Clock
0	0	foscD / 4
0	1	foscD / 6,
1	0	foscD / 8
1	1	foscD / 12

DT[1:0]: Delay time of power on and power off sequence.

DT1	DT0	Delay time of power on and power off sequence on
0	0	5ms
0	1	10ms
1	0	15ms
1	1	20ms

DTP[2:0]: Set the operating duty cycle of DC/DC clock for VSP.

1 duty cycle = 1 foscD clock

DTP2	DTP1	DTP0	Operation Duty Cycle of DC/DC Clock for VSP Generation
0	0	0	1
0	0	1	2
0	1	0	3
0	1	1	4
1	0	0	5
1	0	1	6

Himax Confidential
Do Not Copy

This information contained herein is the exclusive property of Himax and shall not be distributed, reproduced, or disclosed in whole or in part without prior written permission of Himax.

1	1	0	7
1	1	1	8

DTPS[2:0]: Set the soft start operating duty cycle of DC/DC circuit. (PFM DC/DC circuit).

1 duty cycle = 1 M clock

DTPS2	DTPS1	DTPS0	soft start operating duty cycle of DC/DC circuit circuit
0	0	0	1
0	0	1	2
0	1	0	3
0	1	1	4
1	0	0	5
1	0	1	6
1	1	0	7
1	1	1	8

DTN[2:0]: Set the operating duty cycle of DC/DC clock for VSN.

1 duty cycle = 1 foscD clock

DTN2	DTN1	DTN0	Operation Duty Cycle of DC/DC Clock for VSN Generation
0	0	0	1
0	0	1	2
0	1	0	3
0	1	1	4
1	0	0	5
1	0	1	6
1	1	0	7
1	1	1	8

DTNS[2:0]: Set the soft start operating duty cycle of DC/DC circuit. (PFM DC/DC circuit).

1 duty cycle = 1 M clock

DTNS2	DTNS1	DTNS0	soft start operating duty cycle of DC/DC circuit circuit
0	0	0	1
0	0	1	2
0	1	0	3
0	1	1	4
1	0	0	5
1	0	1	6
1	1	0	7
1	1	1	8

BTP[4:0]: Switch the output factor for DC/DC circuit. The LCD drive voltage level VSP can be selected according to the characteristic of liquid crystal which panel used.

BTP4	BTP3	BTP2	BTP1	BTP0	VSP
0	0	0	0	0	3.01
0	0	0	0	1	3.15
0	0	0	1	0	3.29
0	0	0	1	1	3.46

Himax Confidential
Do Not Copy

This information contained herein is the exclusive property of Himax and shall not be distributed, reproduced, or disclosed in whole or in part without prior written permission of Himax.

0	0	1	0	0	3.60
0	0	1	0	1	3.74
0	0	1	1	0	3.91
0	0	1	1	1	4.05
0	1	0	0	0	4.19
0	1	0	0	1	4.36
0	1	0	1	0	4.50
0	1	0	1	1	4.64
0	1	1	0	0	4.81
0	1	1	0	1	4.95
0	1	1	1	0	5.09
0	1	1	1	1	5.26
1	0	0	0	0	5.40
1	0	0	0	1	5.54
1	0	0	1	0	5.71
1	0	0	1	1	Inhibit
1	0	1	0	0	Inhibit
1	0	1	0	1	Inhibit
1	0	1	1	0	Inhibit
1	0	1	1	1	Inhibit
1	1	0	0	0	Inhibit
1	1	0	0	1	Inhibit
1	1	0	1	0	Inhibit
1	1	0	1	1	Inhibit
1	1	1	0	0	Inhibit
1	1	1	0	1	Inhibit
1	1	1	1	0	Inhibit
1	1	1	1	1	Inhibit

BTN[4:0]: Switch the output factor of DC/DC circuit for VSN voltage generation. The LCD drive voltage level VSN can be selected according to the characteristic of liquid crystal which panel used.

BTN4	BTN3	BTN2	BTN1	BTN0	VSN
0	0	0	0	0	-3.01
0	0	0	0	1	-3.15
0	0	0	1	0	-3.29
0	0	0	1	1	-3.46
0	0	1	0	0	-3.60
0	0	1	0	1	-3.74
0	0	1	1	0	-3.91
0	0	1	1	1	-4.05
0	1	0	0	0	-4.19
0	1	0	0	1	-4.36
0	1	0	1	0	-4.50
0	1	0	1	1	-4.64
0	1	1	0	0	-4.81
0	1	1	0	1	-4.95
0	1	1	1	0	-5.09
0	1	1	1	1	-5.26
1	0	0	0	0	-5.40
1	0	0	0	1	-5.54
1	0	0	1	0	-5.71
1	0	0	1	1	Inhibit
1	0	1	0	0	Inhibit
1	0	1	0	1	Inhibit

Himax Confidential
Do Not Copy

This information contained herein is the exclusive property of Himax and shall not be distributed, reproduced, or disclosed in whole or in part without prior written permission of Himax.

1	0	1	1	0	Inhibit
1	0	1	1	1	Inhibit
1	1	0	0	0	Inhibit
1	1	0	0	1	Inhibit
1	1	0	1	0	Inhibit
1	1	0	1	1	Inhibit
1	1	1	0	0	Inhibit
1	1	1	0	1	Inhibit
1	1	1	1	0	Inhibit
1	1	1	1	1	Inhibit

AP[2:0]: Adjust the amount of fixed current from the fixed current source for the operational amplifier in the power supply circuit. When the amount of fixed current is increased, the LCD driving capacity and the display quality are high, but the current consumption is increased. This is a tradeoff, Adjust the fixed current by considering both the display quality and the current consumption. During no display operation, when AP[2:0] = 000, the current consumption can be reduced by stopping the operations of operational amplifier and step-up circuit.

AP2	AP1	AP0	Constant Current of Operational Amplifier
0	0	0	Stop
0	0	1	0.5μA
0	1	0	1μA
0	1	1	1.5μA
1	0	0	2μA
1	0	1	2.5μA
1	1	0	3μA
1	1	1	3.5μA

SLP: When SLP = “1”, the HX83xx-A enters the standby mode, where all display operation stops, suspend all the internal operations. But the internal R-C oscillator stop or not is determined by OSC_EN bit. To minimize the standby power, please set OSC_EN to 0. During the standby mode, only the following process can be executed.

a. Exit the Standby (Sleep) mode (SLP = “0”)
b. Enable or disable the oscillation
c. Software reset

VRHP[7:0]: VSPR regulator output control setting for source data output driving.

VRHP[7:0]								VSPR
0	0	0	0	0	0	0	0	3.488
0	0	0	0	0	0	0	1	3.516
0	0	0	0	0	0	1	0	3.544
0	0	0	0	0	0	1	1	3.572
0	0	0	0	0	1	0	0	3.600
0	0	0	0	0	1	0	1	3.628
0	0	0	0	0	1	1	0	3.656
0	0	0	0	0	1	1	1	3.684
0	0	0	0	1	0	0	0	3.713
0	0	0	0	1	0	0	1	3.741
0	0	0	0	1	0	1	0	3.769
0	0	0	0	1	0	1	1	3.797
0	0	0	0	1	1	0	0	3.825
0	0	0	0	1	1	0	1	3.853
0	0	0	0	1	1	1	0	3.881
0	0	0	0	1	1	1	1	3.909
0	0	0	1	0	0	0	0	3.938

Himax Confidential
Do Not Copy

This information contained herein is the exclusive property of Himax and shall not be distributed, reproduced, or disclosed in whole or in part without prior written permission of Himax.

0	0	0	1	0	0	0	1	3.966
0	0	0	1	0	0	1	0	3.994
0	0	0	1	0	0	1	1	4.022
0	0	0	1	0	1	0	0	4.050
0	0	0	1	0	1	0	1	4.078
0	0	0	1	0	1	1	0	4.106
0	0	0	1	0	1	1	1	4.134
0	0	0	1	1	0	0	0	4.163
0	0	0	1	1	0	0	1	4.191
0	0	0	1	1	0	1	0	4.219
0	0	0	1	1	0	1	1	4.247
0	0	0	1	1	1	0	0	4.275
0	0	0	1	1	1	0	1	4.303
0	0	0	1	1	1	1	0	4.331
0	0	0	1	1	1	1	1	4.359
0	0	1	0	0	0	0	0	4.388
0	0	1	0	0	0	0	1	4.416
0	0	1	0	0	0	1	0	4.444
0	0	1	0	0	0	1	1	4.472
0	0	1	0	0	1	0	0	4.500
0	0	1	0	0	1	0	1	4.528
0	0	1	0	0	1	1	0	4.556
0	0	1	0	0	1	1	1	4.584
0	0	1	0	1	0	0	0	4.613
0	0	1	0	1	0	0	1	4.641
0	0	1	0	1	0	1	0	4.669
0	0	1	0	1	0	1	1	4.697
0	0	1	0	1	1	0	0	4.725
0	0	1	0	1	1	0	1	4.753
0	0	1	0	1	1	1	0	4.781
0	0	1	0	1	1	1	1	4.809
0	0	1	1	0	0	0	0	4.838
0	0	1	1	0	0	0	1	4.866
0	0	1	1	0	0	1	0	4.894
0	0	1	1	0	0	1	1	4.922
0	0	1	1	0	1	0	0	4.950
0	0	1	1	0	1	0	1	4.978
0	0	1	1	0	1	1	0	5.006
0	0	1	1	0	1	1	1	5.034
0	0	1	1	1	0	0	0	5.063
0	0	1	1	1	0	0	1	5.091
0	0	1	1	1	0	1	0	5.119
00111011 ~ 01111110								Inhibit
0	1	1	1	1	1	1	1	VSP
10000000 ~ 11111110								Inhibit
1	1	1	1	1	1	1	1	HZ

VRHN[7:0]: VSNR regulator output control setting for source data output driving.

VRHN[7:0]								VSNR
0	0	0	0	0	0	0	0	-3.263
0	0	0	0	0	0	0	1	-3.291
0	0	0	0	0	0	1	0	-3.319
0	0	0	0	0	0	1	1	-3.347
0	0	0	0	0	1	0	0	-3.375
0	0	0	0	0	1	0	1	-3.403
0	0	0	0	0	1	1	0	-3.431
0	0	0	0	0	1	1	1	-3.459
0	0	0	0	1	0	0	0	-3.488
0	0	0	0	1	0	0	1	-3.516
0	0	0	0	1	0	1	0	-3.544
0	0	0	0	1	0	1	1	-3.572

Himax Confidential
Do Not Copy

This information contained herein is the exclusive property of Himax and shall not be distributed, reproduced, or disclosed in whole or in part without prior written permission of Himax.

0	0	0	0	1	1	0	0	-3.600
0	0	0	0	1	1	0	1	-3.628
0	0	0	0	1	1	1	0	-3.656
0	0	0	0	1	1	1	1	-3.684
0	0	0	1	0	0	0	0	-3.713
0	0	0	1	0	0	0	1	-3.741
0	0	0	1	0	0	1	0	-3.769
0	0	0	1	0	0	1	1	-3.797
0	0	0	1	0	1	0	0	-3.825
0	0	0	1	0	1	0	1	-3.853
0	0	0	1	0	1	1	0	-3.881
0	0	0	1	0	1	1	1	-3.909
0	0	0	1	1	0	0	0	-3.938
0	0	0	1	1	0	0	1	-3.966
0	0	0	1	1	0	1	0	-3.994
0	0	0	1	1	0	1	1	-4.022
0	0	0	1	1	1	0	0	-4.050
0	0	0	1	1	1	0	1	-4.078
0	0	0	1	1	1	1	0	-4.106
0	0	0	1	1	1	1	1	-4.134
0	0	1	0	0	0	0	0	-4.163
0	0	1	0	0	0	0	1	-4.191
0	0	1	0	0	0	1	0	-4.219
0	0	1	0	0	0	1	1	-4.247
0	0	1	0	0	1	0	0	-4.275
0	0	1	0	0	1	0	1	-4.303
0	0	1	0	0	1	1	0	-4.331
0	0	1	0	0	1	1	1	-4.359
0	0	1	0	1	0	0	0	-4.388
0	0	1	0	1	0	0	1	-4.416
0	0	1	0	1	0	1	0	-4.444
0	0	1	0	1	0	1	1	-4.472
0	0	1	0	1	1	0	0	-4.500
0	0	1	0	1	1	0	1	-4.528
0	0	1	0	1	1	1	0	-4.556
0	0	1	0	1	1	1	1	-4.584
0	0	1	1	0	0	0	0	-4.613
0	0	1	1	0	0	0	1	-4.641
0	0	1	1	0	0	1	0	-4.669
0	0	1	1	0	0	1	1	-4.697
0	0	1	1	0	1	0	0	-4.725
0	0	1	1	0	1	0	1	-4.753
0	0	1	1	0	1	1	0	-4.781
0	0	1	1	0	1	1	1	-4.809
0	0	1	1	1	0	0	0	-4.838
0	0	1	1	1	0	0	1	-4.866
0	0	1	1	1	0	1	0	-4.894
0	0	1	1	1	0	1	1	-4.922
0	0	1	1	1	1	0	0	-4.950
0	0	1	1	1	1	0	1	-4.978
0	0	1	1	1	1	1	0	-5.006
0	0	1	1	1	1	1	1	-5.034
0	1	0	0	0	0	0	0	-5.063
0	1	0	0	0	0	0	1	-5.091
0	1	0	0	0	0	1	0	-5.119
01000011 ~ 01111110								Inhibit

Himax Confidential
Do Not Copy

This information contained herein is the exclusive property of Himax and shall not be distributed, reproduced, or disclosed in whole or in part without prior written permission of Himax.

0	1	1	1	1	1	1	1	VSN
10000000 ~ 11111110								Inhibit
1	1	1	1	1	1	1	1	HZ

VRMP[5:0]: The positive polarity gamma amplitude voltage setting (VSPR-VGSP).

VRMP[5:0]						VSPR-VGSP
0	0	0	0	0	0	2.588
0	0	0	0	0	1	2.644
0	0	0	0	1	0	2.700
0	0	0	0	1	1	2.756
0	0	0	1	0	0	2.813
0	0	0	1	0	1	2.869
0	0	0	1	1	0	2.925
0	0	0	1	1	1	2.981
0	0	1	0	0	0	3.038
0	0	1	0	0	1	3.094
0	0	1	0	1	0	3.150
0	0	1	0	1	1	3.206
0	0	1	1	0	0	3.263
0	0	1	1	0	1	3.319
0	0	1	1	1	0	3.375
0	0	1	1	1	1	3.431
0	1	0	0	0	0	3.488
0	1	0	0	0	1	3.544
0	1	0	0	1	0	3.600
0	1	0	0	1	1	3.656
0	1	0	1	0	0	3.713
0	1	0	1	0	1	3.769
0	1	0	1	1	0	3.825
0	1	0	1	1	1	3.881
0	1	1	0	0	0	3.938
0	1	1	0	0	1	3.994
0	1	1	0	1	0	4.050
0	1	1	0	1	1	4.106
0	1	1	1	0	0	4.163
0	1	1	1	0	1	4.219
0	1	1	1	1	0	4.275
0	1	1	1	1	1	4.331
1	0	0	0	0	0	4.388
1	0	0	0	0	1	4.444
1	0	0	0	1	0	4.500
1	0	0	0	1	1	4.556
1	0	0	1	0	0	4.613
1	0	0	1	0	1	4.669
1	0	0	1	1	0	4.725
1	0	0	1	1	1	4.781
1	0	1	0	0	0	4.838
1	0	1	0	0	1	4.894
1	0	1	0	1	0	4.950
1	0	1	0	1	1	5.006
1	0	1	1	0	0	5.063
1	0	1	1	0	1	5.119
1	0	1	1	1	0	Inhibit

Himax Confidential
Do Not Copy

This information contained herein is the exclusive property of Himax and shall not be distributed, reproduced, or disclosed in whole or in part without prior written permission of Himax.

1	0	1	1	1	1	Inhibit
1	1	0	0	0	0	Inhibit
1	1	0	0	0	1	Inhibit
1	1	0	0	1	0	Inhibit
1	1	0	0	1	1	Inhibit
1	1	0	1	0	0	Inhibit
1	1	0	1	0	1	Inhibit
1	1	0	1	1	0	Inhibit
1	1	0	1	1	1	Inhibit
1	1	1	0	0	0	Inhibit
1	1	1	0	0	1	Inhibit
1	1	1	0	1	0	Inhibit
1	1	1	0	1	1	Inhibit
1	1	1	1	0	0	Inhibit
1	1	1	1	0	1	Inhibit
1	1	1	1	1	0	Inhibit
1	1	1	1	1	1	VSPR(VGSP=VSSA)

VRMN[5:0]: The negitive polarity gamma amplitude voltage setting (VSNR-VGSN).

VRMN[5:0]						VSNR-VGSN
0	0	0	0	0	0	-2.588
0	0	0	0	0	1	-2.644
0	0	0	0	1	0	-2.700
0	0	0	0	1	1	-2.756
0	0	0	1	0	0	-2.813
0	0	0	1	0	1	-2.869
0	0	0	1	1	0	-2.925
0	0	0	1	1	1	-2.981
0	0	1	0	0	0	-3.038
0	0	1	0	0	1	-3.094
0	0	1	0	1	0	-3.150
0	0	1	0	1	1	-3.206
0	0	1	1	0	0	-3.263
0	0	1	1	0	1	-3.319
0	0	1	1	1	0	-3.375
0	0	1	1	1	1	-3.431
0	1	0	0	0	0	-3.488
0	1	0	0	0	1	-3.544
0	1	0	0	1	0	-3.600
0	1	0	0	1	1	-3.656
0	1	0	1	0	0	-3.713
0	1	0	1	0	1	-3.769
0	1	0	1	1	0	-3.825
0	1	0	1	1	1	-3.881
0	1	1	0	0	0	-3.938
0	1	1	0	0	1	-3.994
0	1	1	0	1	0	-4.050
0	1	1	0	1	1	-4.106
0	1	1	1	0	0	-4.163
0	1	1	1	0	1	-4.219
0	1	1	1	1	0	-4.275
0	1	1	1	1	1	-4.331
1	0	0	0	0	0	-4.388

Himax Confidential
Do Not Copy

This information contained herein is the exclusive property of Himax and shall not be distributed, reproduced, or disclosed in whole or in part without prior written permission of Himax.

1	0	0	0	0	1	-4.444
1	0	0	0	1	0	-4.500
1	0	0	0	1	1	-4.556
1	0	0	1	0	0	-4.613
1	0	0	1	0	1	-4.669
1	0	0	1	1	0	-4.725
1	0	0	1	1	1	-4.781
1	0	1	0	0	0	-4.838
1	0	1	0	0	1	-4.894
1	0	1	0	1	0	-4.950
1	0	1	0	1	1	-5.006
1	0	1	1	0	0	-5.063
1	0	1	1	0	1	-5.119
1	0	1	1	1	0	Inhibit
1	0	1	1	1	1	Inhibit
1	1	0	0	0	0	Inhibit
1	1	0	0	0	1	Inhibit
1	1	0	0	1	0	Inhibit
1	1	0	0	1	1	Inhibit
1	1	0	1	0	0	Inhibit
1	1	0	1	0	1	Inhibit
1	1	0	1	1	0	Inhibit
1	1	0	1	1	1	Inhibit
1	1	1	0	0	0	Inhibit
1	1	1	0	0	1	Inhibit
1	1	1	0	1	0	Inhibit
1	1	1	0	1	1	Inhibit
1	1	1	1	0	0	Inhibit
1	1	1	1	0	1	Inhibit
1	1	1	1	1	0	Inhibit
1	1	1	1	1	1	VSNR(VGSN=VSSA)

Restriction

SETEXTC turn on to enable this command

Register Availability

Status	Availability
Sleep Out	Yes
Sleep In or Booster Off	Yes

Default

Status	Default Value
Power On Sequence	OTP value
S/W Reset	OTP value
H/W Reset	OTP value

Flow Chart

Himax Confidential
Do Not Copy

6.2.35 SETRGBIF: Set RGB interface related register (B3h)

B3 H	SETRGBIF(Set RGB interface related register)									
	DNC	D7	D6	D5	D4	D3	D2	D1	D0	HEX
Command	0	1	0	1	1	0	0	1	1	B3
1st parameter	1	-	-	-	-	DPL (0)	HSPL (0)	VSPL (0)	EPL (0)	-

Description

This command is used to set RGB interface related register

EPL: Specify the polarity of Enable pin in RGB interface mode.

EPL	ENABLE pin	Display
0	0	Enable
0	1	Disable
1	0	Disable
1	1	Enable

VSPL: The polarity of VSYNC pin. When VSPL=0, the VSYNC pin is Low active. When VSPL=1, the VSYNC pin is High active.

HSPL: The polarity of HSYNC pin. When HSPL=0, the HSYNC pin is Low active. When HSPL=1, the HSYNC pin is High active

DPL: The polarity of DCK pin. When DPL=0, the data is read on the rising edge of DCK signal. When DPL=1, the data is read on the falling edge of DCK signal.

Restrictions

SETEXTC turn on to enable this command

Register Availability

Status	Availability
Sleep Out	Yes

Default

Status	Default Value
Power On Sequence	OTP value
S/W Reset	OTP value
H/W Reset	OTP value

Flow Chart

Himax Confidential
Do Not Copy

This information contained herein is the exclusive property of Himax and shall not be distributed, reproduced, or disclosed in whole or in part without prior written permission of Himax.

6.2.36 SETCYC: Set Display Waveform Cycle (B4h)

B4H	SETCYC(Set display waveform cycles)									
	DNC	D7	D6	D5	D4	D3	D2	D1	D0	HEX
Command	0	1	0	1	0	0	1	0	0	B4
1st parameter	1					NW[1:0]				
2th Parameter	1	SON[7:0]								
3th Parameter	1	SOFF[7:0]								
4th Parameter	1	EQS[7:0]								
5th Parameter	1	EQON[7:0]								
6th Parameter	1	GDON[7:0]								
7th Parameter	1	GDOFF[7:0]								
8th Parameter	1	GVSSP1[7:0]								
9th Parameter	1	GVSSP2[7:0]								

Description

This command is used to get setting of display waveform cycles

NW[1:0]: Inversion type setting

NW1	NW0	Inversion type
0	0	Column inversion
0	1	1-dot inversion
1	0	2-dot inversion
1	1	Inhibit

SON[7:0]: Specify the valid source output start time and illustrate on the follow figure.

SON [7:0]								Source output start time
0	0	0	0	0	0	0	0	Inhibit
0	0	0	0	0	0	0	1	1 timing clock
0	0	0	0	0	0	1	0	2 timing clock
0	0	0	0	0	0	1	1	3 timing clock
0	0	0	0	0	1	0	0	4 timing clock
0	0	0	0	0	1	0	1	5 timing clock
0	0	0	0	0	1	1	0	6 timing clock
0	0	0	0	0	1	1	1	7 timing clock
0	0	0	0	1	0	0	0	8 timing clock
0	0	0	0	1	0	0	1	9 timing clock
0	0	0	0	1	0	1	0	10 timing clock
0	0	0	0	1	0	1	1	11 timing clock
0	0	0	0	1	1	0	0	12 timing clock
0	0	0	0	1	1	0	1	13 timing clock
0	0	0	0	1	1	1	0	14 timing clock
0	0	0	0	1	1	1	1	15 timing clock
. . .	. . .	. . .	. . .	. . .	. . .	. . .	. . .	. . .
1	1	1	1	1	0	1	0	250 timing clock
1	1	1	1	1	0	1	1	251 timing clock
1	1	1	1	1	1	0	0	252 timing clock
1	1	1	1	1	1	0	1	253 timing clock
1	1	1	1	1	1	1	0	254 timing clock
1	1	1	1	1	1	1	1	255 timing clock

1 timing clock = 1 * the frequency of OSC clock

Himax Confidential
Do Not Copy

This information contained herein is the exclusive property of Himax and shall not be distributed, reproduced, or disclosed in whole or in part without prior written permission of Himax.

SOFF[7:0]: Specify the valid source output end time and illustrate on the follow figure.

SOFF [7:0]								Source output end time
0	0	0	0	0	0	0	0	Inhibit
0	0	0	0	0	0	0	1	1 timing clock
0	0	0	0	0	0	1	0	2 timing clock
0	0	0	0	0	0	1	1	3 timing clock
0	0	0	0	0	1	0	0	4 timing clock
0	0	0	0	0	1	0	1	5 timing clock
0	0	0	0	0	1	1	0	6 timing clock
0	0	0	0	0	1	1	1	7 timing clock
0	0	0	0	1	0	0	0	8 timing clock
0	0	0	0	1	0	0	1	9 timing clock
0	0	0	0	1	0	1	0	10 timing clock
0	0	0	0	1	0	1	1	11 timing clock
0	0	0	0	1	1	0	0	12 timing clock
0	0	0	0	1	1	0	1	13 timing clock
0	0	0	0	1	1	1	0	14 timing clock
0	0	0	0	1	1	1	1	15 timing clock
. . .	. . .	. . .	. . .	. . .	. . .	. . .	. . .	. . .
1	1	1	1	1	0	1	0	250 timing clock
1	1	1	1	1	0	1	1	251 timing clock
1	1	1	1	1	1	0	0	252 timing clock
1	1	1	1	1	1	0	1	253 timing clock
1	1	1	1	1	1	1	0	254 timing clock
1	1	1	1	1	1	1	1	255 timing clock

1 timing clock = 1 * the frequency of OSC clock

GDON[7:0]: Specify the valid gate output start time and illustrate on the follow figure.

GDON [7:0]								Gate output start time
0	0	0	0	0	0	0	0	Inhibit
0	0	0	0	0	0	0	1	1 timing clock
0	0	0	0	0	0	1	0	2 timing clock
0	0	0	0	0	0	1	1	3 timing clock
0	0	0	0	0	1	0	0	4 timing clock
0	0	0	0	0	1	0	1	5 timing clock
0	0	0	0	0	1	1	0	6 timing clock
0	0	0	0	0	1	1	1	7 timing clock
0	0	0	0	1	0	0	0	8 timing clock
0	0	0	0	1	0	0	1	9 timing clock
0	0	0	0	1	0	1	0	10 timing clock
0	0	0	0	1	0	1	1	11 timing clock
0	0	0	0	1	1	0	0	12 timing clock
0	0	0	0	1	1	0	1	13 timing clock
0	0	0	0	1	1	1	0	14 timing clock
0	0	0	0	1	1	1	1	15 timing clock
. . .	. . .	. . .	. . .	. . .	. . .	. . .	. . .	. . .
1	1	1	1	1	0	1	0	250 timing clock
1	1	1	1	1	0	1	1	251 timing clock
1	1	1	1	1	1	0	0	252 timing clock
1	1	1	1	1	1	0	1	253 timing clock
1	1	1	1	1	1	1	0	254 timing clock
1	1	1	1	1	1	1	1	255 timing clock

Himax Confidential
Do Not Copy

This information contained herein is the exclusive property of Himax and shall not be distributed, reproduced, or disclosed in whole or in part without prior written permission of Himax.

1 timing clock = 1 * the frequency of OSC clock

GDOFF[7:0]: Specify the gate output end time and illustrate on the follow figure.

GDOFF [7:0]								Gate output end time
0	0	0	0	0	0	0	0	Inhibit
0	0	0	0	0	0	0	1	1 timing clock
0	0	0	0	0	0	1	0	2 timing clock
0	0	0	0	0	0	1	1	3 timing clock
0	0	0	0	0	1	0	0	4 timing clock
0	0	0	0	0	1	0	1	5 timing clock
0	0	0	0	0	1	1	0	6 timing clock
0	0	0	0	0	1	1	1	7 timing clock
0	0	0	0	1	0	0	0	8 timing clock
0	0	0	0	1	0	0	1	9 timing clock
0	0	0	0	1	0	1	0	10 timing clock
0	0	0	0	1	0	1	1	11 timing clock
0	0	0	0	1	1	0	0	12 timing clock
0	0	0	0	1	1	0	1	13 timing clock
0	0	0	0	1	1	1	0	14 timing clock
0	0	0	0	1	1	1	1	15 timing clock
. . .	. . .	. . .	. . .	. . .	. . .	. . .	. . .	. . .
1	1	1	1	1	0	1	0	250 timing clock
1	1	1	1	1	0	1	1	251 timing clock
1	1	1	1	1	1	0	0	252 timing clock
1	1	1	1	1	1	0	1	253 timing clock
1	1	1	1	1	1	1	0	254 timing clock
1	1	1	1	1	1	1	1	255 timing clock

1 timing clock = 1 * the frequency of OSC clock

EQON[7:0]: Specify the valid Equalize output start time and illustrate on the follow figure. (Please note that the EQON[7:0] ≤ EQS[7:0]-1).

EQON [7:0]								Gate output start time
0	0	0	0	0	0	0	0	Inhibit
0	0	0	0	0	0	0	1	1 timing clock
0	0	0	0	0	0	1	0	2 timing clock
0	0	0	0	0	0	1	1	3 timing clock
0	0	0	0	0	1	0	0	4 timing clock
0	0	0	0	0	1	0	1	5 timing clock
0	0	0	0	0	1	1	0	6 timing clock
0	0	0	0	0	1	1	1	7 timing clock
0	0	0	0	1	0	0	0	8 timing clock
0	0	0	0	1	0	0	1	9 timing clock
0	0	0	0	1	0	1	0	10 timing clock
0	0	0	0	1	0	1	1	11 timing clock
0	0	0	0	1	1	0	0	12 timing clock
0	0	0	0	1	1	0	1	13 timing clock
0	0	0	0	1	1	1	0	14 timing clock
0	0	0	0	1	1	1	1	15 timing clock
. . .	. . .	. . .	. . .	. . .	. . .	. . .	. . .	. . .
1	1	1	1	1	0	1	0	250 timing clock
1	1	1	1	1	0	1	1	251 timing clock

Himax Confidential
Do Not Copy

This information contained herein is the exclusive property of Himax and shall not be distributed, reproduced, or disclosed in whole or in part without prior written permission of Himax.

1	1	1	1	1	1	0	0	252 timing clock
1	1	1	1	1	1	0	1	253 timing clock
1	1	1	1	1	1	1	0	254 timing clock
1	1	1	1	1	1	1	1	255 timing clock

1 timing clock = 1 * the frequency of OSC clock

EQS[7:0]: Specify the Equalize time of source output and illustrate on the follow figure. (Please note that the EQS[7:0] ≤ SON-1).

EQS [7:0]								Equalize time of source output
0	0	0	0	0	0	0	0	Equalize function off
0	0	0	0	0	0	0	1	1 timing clock
0	0	0	0	0	0	1	0	2 timing clock
0	0	0	0	0	0	1	1	3 timing clock
0	0	0	0	0	1	0	0	4 timing clock
0	0	0	0	0	1	0	1	5 timing clock
0	0	0	0	0	1	1	0	6 timing clock
0	0	0	0	0	1	1	1	7 timing clock
0	0	0	0	1	0	0	0	8 timing clock
0	0	0	0	1	0	0	1	9 timing clock
0	0	0	0	1	0	1	0	10 timing clock
0	0	0	0	1	0	1	1	11 timing clock
0	0	0	0	1	1	0	0	12 timing clock
0	0	0	0	1	1	0	1	13 timing clock
0	0	0	0	1	1	1	0	14 timing clock
0	0	0	0	1	1	1	1	15 timing clock
.	.	.	.	.	.	.	.	.
.	.	.	.	.	.	.	.	.
.	.	.	.	.	.	.	.	.
1	1	1	1	1	0	1	0	250 timing clock
1	1	1	1	1	0	1	1	251 timing clock
1	1	1	1	1	1	0	0	252 timing clock
1	1	1	1	1	1	0	1	253 timing clock
1	1	1	1	1	1	1	0	254 timing clock
1	1	1	1	1	1	1	1	255 timing clock

1 timing clock = 1 * the frequency of OSC clock

GVSSP1[7:0]: Specify the stop time of first Gate EQ of two step gate output and illustrate on the follow figure.

GVSSP1 [7:0]								Stop time of 1st Gate EQ
0	0	0	0	0	0	0	0	Inhibit
0	0	0	0	0	0	0	1	1 timing clock
0	0	0	0	0	0	1	0	2 timing clock
0	0	0	0	0	0	1	1	3 timing clock
0	0	0	0	0	1	0	0	4 timing clock
0	0	0	0	0	1	0	1	5 timing clock
0	0	0	0	0	1	1	0	6 timing clock
0	0	0	0	0	1	1	1	7 timing clock
0	0	0	0	1	0	0	0	8 timing clock
0	0	0	0	1	0	0	1	9 timing clock
0	0	0	0	1	0	1	0	10 timing clock
0	0	0	0	1	0	1	1	11 timing clock
0	0	0	0	1	1	0	0	12 timing clock
0	0	0	0	1	1	0	1	13 timing clock
0	0	0	0	1	1	1	0	14 timing clock
0	0	0	0	1	1	1	1	15 timing clock
.	.	.	.	.	.	.	.	.

Himax Confidential
Do Not Copy

This information contained herein is the exclusive property of Himax and shall not be distributed, reproduced, or disclosed in whole or in part without prior written permission of Himax.

. . .	. . .	. . .	. . .	. . .	. . .	. . .	. . .	. . .
1	1	1	1	1	0	1	0	250 timing clock
1	1	1	1	1	0	1	1	251 timing clock
1	1	1	1	1	1	0	0	252 timing clock
1	1	1	1	1	1	0	1	253 timing clock
1	1	1	1	1	1	1	0	254 timing clock
1	1	1	1	1	1	1	1	255 timing clock

1 timing clock = 1 * the frequency of OSC clock

GVSSP2[7:0]: Specify the start time of second Gate EQ of two step gate output and illustrate on the follow figure.

GVSSP2 [7:0]								Start time of 2nd Gate EQ
0	0	0	0	0	0	0	0	Inhibit
0	0	0	0	0	0	0	1	1 timing clock
0	0	0	0	0	0	1	0	2 timing clock
0	0	0	0	0	0	1	1	3 timing clock
0	0	0	0	0	1	0	0	4 timing clock
0	0	0	0	0	1	0	1	5 timing clock
0	0	0	0	0	1	1	0	6 timing clock
0	0	0	0	0	1	1	1	7 timing clock
0	0	0	0	1	0	0	0	8 timing clock
0	0	0	0	1	0	0	1	9 timing clock
0	0	0	0	1	0	1	0	10 timing clock
0	0	0	0	1	0	1	1	11 timing clock
0	0	0	0	1	1	0	0	12 timing clock
0	0	0	0	1	1	0	1	13 timing clock
0	0	0	0	1	1	1	0	14 timing clock
0	0	0	0	1	1	1	1	15 timing clock
. . .	. . .	. . .	. . .	. . .	. . .	. . .	. . .	. . .
1	1	1	1	1	0	1	0	250 timing clock
1	1	1	1	1	0	1	1	251 timing clock
1	1	1	1	1	1	0	0	252 timing clock
1	1	1	1	1	1	0	1	253 timing clock
1	1	1	1	1	1	1	0	254 timing clock
1	1	1	1	1	1	1	1	255 timing clock

1 timing clock = 1 * the frequency of OSC clock

Himax Confidential
Do Not Copy

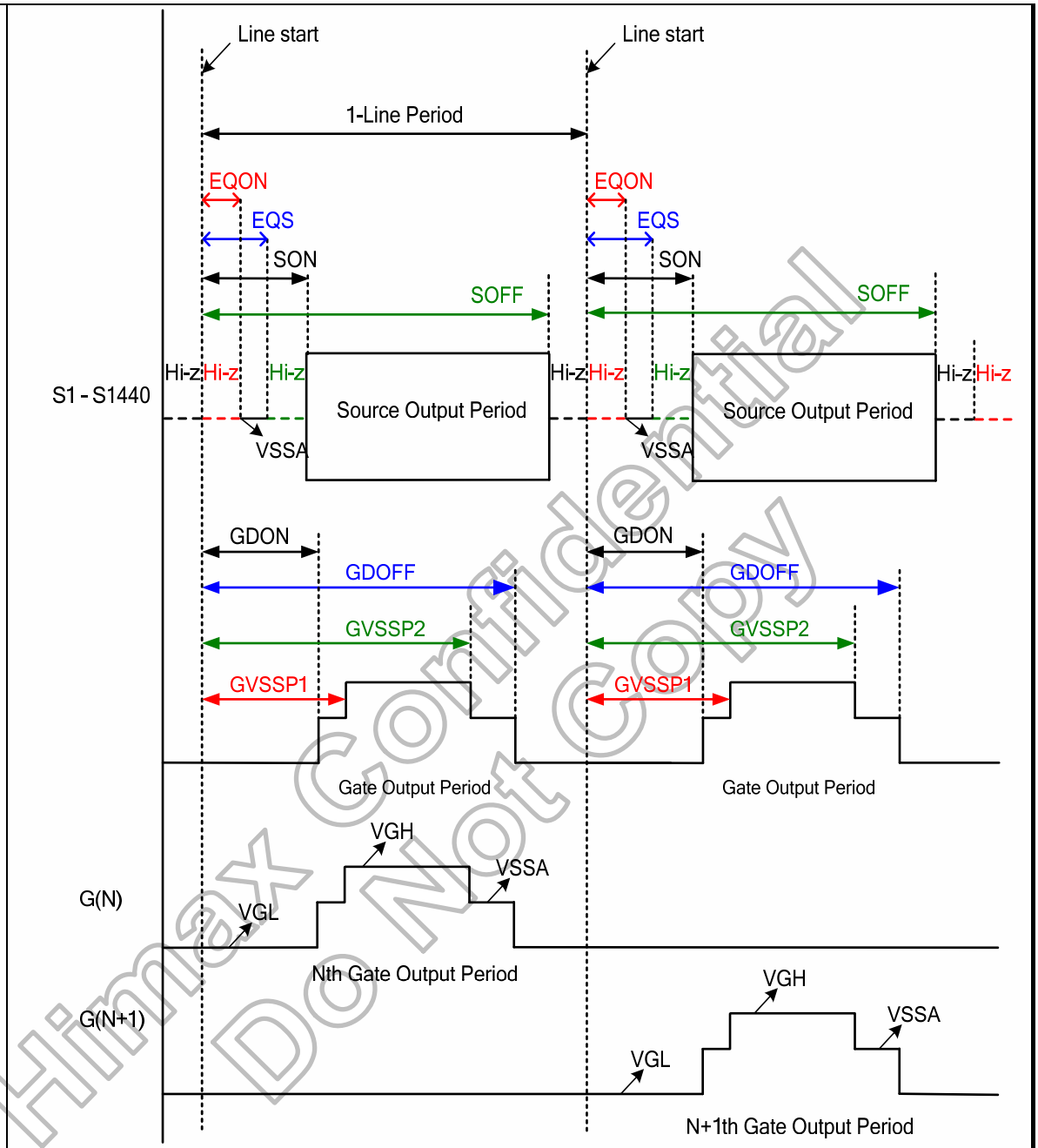

Himax Confidential
Do Not Copy

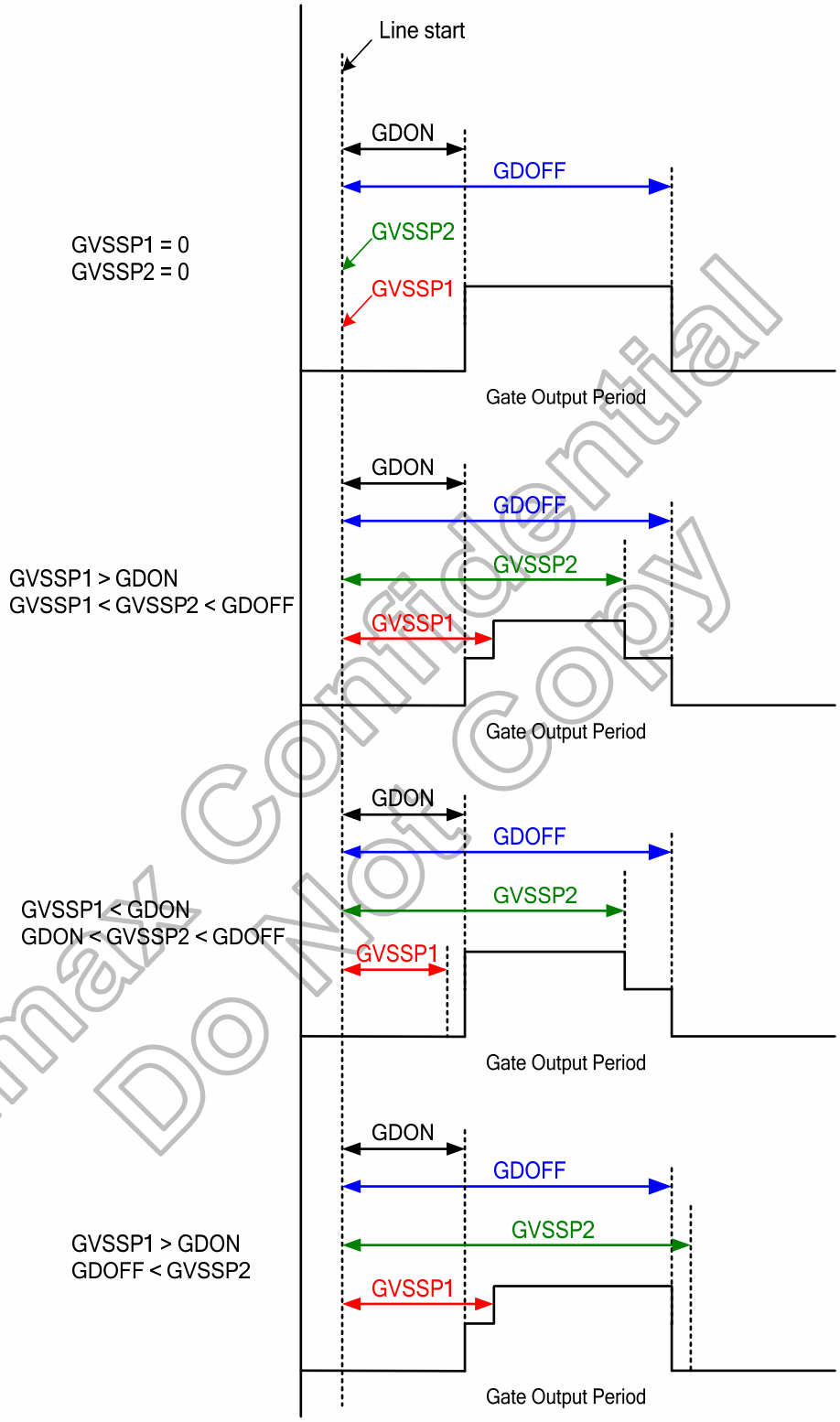

Himax Confidential
Do Not Copy

Restrictions	SETEXTC turn on to enable this command
Register Availability	

Status	Availability
Sleep Out	Yes
Sleep In or Booster Off	Yes

This information contained herein is the exclusive property of Himax and shall not be distributed, reproduced, or disclosed in whole or in part without prior written permission of Himax.

Default	
Flow Chart	

Status	Default Value
Power On Sequence	OTP value
S/W Reset	OTP value
H/W Reset	OTP value

Himax Confidential
Do Not Copy

This information contained herein is the exclusive property of Himax and shall not be distributed, reproduced, or disclosed in whole or in part without prior written permission of Himax.

6.2.37 SETVCOM: Set VCOM Voltage (B6h)

B6 H	SETVCOM (Set VCOM Voltage)									
	DNC	D7	D6	D5	D4	D3	D2	D1	D0	HEX
Command	0	1	0	1	1	0	1	1	0	B6
1st parameter	1	VCMC7	VCMC 6	VCMC 5	VCMC 4	VCMC 3	VCMC 2	VCMC 1	VCMC 0	-

Description

This command is used to set VCOM Voltage include VCOM Low and VCOM High Voltage

VCMC[7:0]: DC VCOM voltage setting .

VCMC[7:0]								VCOM
0	0	0	0	0	0	0	0	-2
0	0	0	0	0	0	0	1	-1.984
0	0	0	0	0	0	1	0	-1.968
0	0	0	0	0	0	1	1	-1.952
0	0	0	0	0	1	0	0	-1.936
0	0	0	0	0	1	0	1	-1.92
0	0	0	0	0	1	1	0	-1.904
0	0	0	0	0	1	1	1	-1.888
0	0	0	0	1	0	0	0	-1.872
0	0	0	0	1	0	0	1	-1.856
0	0	0	0	1	0	1	0	-1.84
0	0	0	0	1	0	1	1	-1.824
0	0	0	0	1	1	0	0	-1.808
0	0	0	0	1	1	0	1	-1.792
0	0	0	0	1	1	1	0	-1.776
0	0	0	0	1	1	1	1	-1.76
0	0	0	1	0	0	0	0	-1.744
0	0	0	1	0	0	0	1	-1.728
0	0	0	1	0	0	1	0	-1.712
0	0	0	1	0	0	1	1	-1.696
0	0	0	1	0	1	0	0	-1.68
0	0	0	1	0	1	0	1	-1.664
0	0	0	1	0	1	1	0	-1.648
0	0	0	1	0	1	1	1	-1.632
0	0	0	1	1	0	0	0	-1.616
0	0	0	1	1	0	0	1	-1.6
0	0	0	1	1	0	1	0	-1.584
0	0	0	1	1	0	1	1	-1.568
0	0	0	1	1	1	0	0	-1.552
0	0	0	1	1	1	0	1	-1.536
0	0	0	1	1	1	1	0	-1.52
0	0	0	1	1	1	1	1	-1.504
0	0	1	0	0	0	0	0	-1.488
0	0	1	0	0	0	0	1	-1.472
0	0	1	0	0	0	1	0	-1.456
0	0	1	0	0	0	1	1	-1.44
0	0	1	0	0	1	0	0	-1.424
0	0	1	0	0	1	0	1	-1.408
0	0	1	0	0	1	1	0	-1.392
0	0	1	0	0	1	1	1	-1.376
0	0	1	0	1	0	0	0	-1.36
0	0	1	0	1	0	0	1	-1.344
0	0	1	0	1	0	1	0	-1.328
0	0	1	0	1	0	1	1	-1.312
0	0	1	0	1	1	0	0	-1.296
0	0	1	0	1	1	0	1	-1.28
0	0	1	0	1	1	1	0	-1.264

Himax Confidential
Do Not Copy

This information contained herein is the exclusive property of Himax and shall not be distributed, reproduced, or disclosed in whole or in part without prior written permission of Himax.

		0	0	1	0	1	1	1	1	-1.248
		0	0	1	1	0	0	0	0	-1.232
		0	0	1	1	0	0	0	1	-1.216
		0	0	1	1	0	0	1	0	-1.2
		0	0	1	1	0	0	1	1	-1.184
		0	0	1	1	0	1	0	0	-1.168
		0	0	1	1	0	1	0	1	-1.152
		0	0	1	1	0	1	1	0	-1.136
		0	0	1	1	0	1	1	1	-1.12
		0	0	1	1	1	0	0	0	-1.104
		0	0	1	1	1	0	0	1	-1.088
		0	0	1	1	1	0	1	0	-1.072
		0	0	1	1	1	0	1	1	-1.056
		0	0	1	1	1	1	0	0	-1.04
		0	0	1	1	1	1	0	1	-1.024
		0	0	1	1	1	1	1	0	-1.008
		0	0	1	1	1	1	1	1	-0.992
		0	1	0	0	0	0	0	0	-0.976
		0	1	0	0	0	0	0	1	-0.96
		0	1	0	0	0	0	1	0	-0.944
		0	1	0	0	0	0	1	1	-0.928
		0	1	0	0	0	1	0	0	-0.912
		0	1	0	0	0	1	0	1	-0.896
		0	1	0	0	0	1	1	0	-0.88
		0	1	0	0	0	1	1	1	-0.864
		0	1	0	0	1	0	0	0	-0.848
		0	1	0	0	1	0	0	1	-0.832
		0	1	0	0	1	0	1	0	-0.816
		0	1	0	0	1	0	1	1	-0.8
		0	1	0	0	1	1	0	0	-0.784
		0	1	0	0	1	1	0	1	-0.768
		0	1	0	0	1	1	1	0	-0.752
		0	1	0	0	1	1	1	1	-0.736
		0	1	0	1	0	0	0	0	-0.72
		0	1	0	1	0	0	0	1	-0.704
		0	1	0	1	0	0	1	0	-0.688
		0	1	0	1	0	0	1	1	-0.672
		0	1	0	1	0	1	0	0	-0.656
		0	1	0	1	0	1	0	1	-0.64
		0	1	0	1	0	1	1	0	-0.624
		0	1	0	1	0	1	1	1	-0.608
		0	1	0	1	1	0	0	0	-0.592
		0	1	0	1	1	0	0	1	-0.576
		0	1	0	1	1	0	1	0	-0.56
		0	1	0	1	1	0	1	1	-0.544
		0	1	0	1	1	1	0	0	-0.528
		0	1	0	1	1	1	0	1	-0.512
		0	1	0	1	1	1	1	0	-0.496
		0	1	0	1	1	1	1	1	-0.48
		0	1	1	0	0	0	0	0	-0.464
		0	1	1	0	0	0	0	1	-0.448
		0	1	1	0	0	0	1	0	-0.432
		0	1	1	0	0	0	1	1	-0.416
		0	1	1	0	0	1	0	0	-0.4
		0	1	1	0	0	1	0	1	-0.384
		0	1	1	0	0	1	1	0	-0.368
		0	1	1	0	0	1	1	1	-0.352
		0	1	1	0	1	0	0	0	-0.336

Himax Confidential
Do Not Copy

0	1	1	0	1	0	0	1	-0.32
0	1	1	0	1	0	1	0	-0.304
0	1	1	0	1	0	1	1	-0.288
0	1	1	0	1	1	0	0	-0.272
0	1	1	0	1	1	0	1	-0.256
0	1	1	0	1	1	1	0	-0.24
0	1	1	0	1	1	1	1	-0.224
0	1	1	1	0	0	0	0	-0.208
0	1	1	1	0	0	0	1	-0.192
0	1	1	1	0	0	1	0	-0.176
0	1	1	1	0	0	1	1	-0.16
0	1	1	1	0	1	0	0	-0.144
0	1	1	1	0	1	0	1	-0.128
0	1	1	1	0	1	1	0	-0.112
0	1	1	1	0	1	1	1	-0.096
0	1	1	1	1	0	0	0	-0.08
0	1	1	1	1	0	0	1	-0.064
0	1	1	1	1	0	1	0	-0.048
0	1	1	1	1	0	1	1	-0.032
0	1	1	1	1	1	0	0	-0.016
01111101 ~ 01111101								Inhibit
0	1	1	1	1	1	1	0	VCOMR
0	1	1	1	1	1	1	1	VSSA
10000000 ~ 11111110								Inhibit
1	1	1	1	1	1	1	1	HZ

Restrictions

SETEXTC turn on to enable this command

Register Availability

Status	Availability
Sleep Out	Yes

Default

Status	Default Value
Power On Sequence	OTP value
S/W Reset	OTP value
H/W Reset	OTP value

Flow Chart

Himax Confidential
Do Not Copy

6.2.38 SETEXTC: Enable extention command (B9h)

B9 H	SETEXTC (Set extended command set)									
	DNC	D7	D6	D5	D4	D3	D2	D1	D0	HEX
Command	0	1	0	1	1	1	0	0	1	B9
1st parameter	1	EXTC1[7:0](00)								-
2nd parameter	1	EXTC2[7:0](00)								-
3rd parameter	1	EXTC3[7:0](00)								-

Description

This command is used to set extended command set access enable.

Extend cmd	Command description
Enable	After command (B0h), must write 3 parameters (ffh,83h,63h) by order
Disable(default)	After command(B0h), write 3 parameters (xxh,xxh,xxh) any value is all right, but can not be (ffh,83h,63h)

Restrictions

Register Availability

Status	Availability
Sleep Out	Yes
Sleep In or Booster Off	Yes

Himax Confidential
Do Not Copy

This information contained herein is the exclusive property of Himax and shall not be distributed, reproduced, or disclosed in whole or in part without prior written permission of Himax.

6.2.39 SETOTP: Set OTP (BBh)

BB H	SETOTP(Set OTP Related Setting)									
	DNC	D7	D6	D5	D4	D3	D2	D1	D0	HEX
Command	0	1	0	1	1	1	0	1	1	BB
1st parameter	1	OTP_LOAD_DISABLE (0)	-	OTP_PCE	OTP_PWE (0)	OTP_PTM[2:0]			OTP_PROG	
2nd parameter	1	OTP_MASK[7:0] (8'b0)								-
3rd parameter	1	OTP_INDEX[7:0] (8'b1111_1111)								-
4th parameter	1	OTP_DATA_READ								-

Description

This command is used to set OTP Related Setting.
OTP_MASK[7:0]: Bit programming mask, if 1, means this bit can't be programmed.
OTP_INDEX[7:0]: Set index of OTP table for programming.
OTP_PWE: OTP program write enable, if 1, means OTP is able to be programmed.
OTP_PROG: When set to 1, the register content of OTP index is programmed.
OTP_DATA_READ: When set to 1, read back the content of the index within OTP table.
OTP_LOAD_DISABLE: Normally the internal registers are auto-loaded from OTP when the SLPOUT command is received. Nevertheless, if this bit is set to 1, it will disable the auto loading function when the SLPOUT command was received. In general, this bit is used when OTP is not yet programmed.
OTP_PCE: Not open, internal use.
OTP_PTM[2:0]: Not open, internal use.

Restrictions

SETEXTC turn on to enable this command

Register Availability

Status	Availability
Sleep Out	Yes

Default

Status	Default Value
Power On Sequence	OTP_MASK[7:0]=8'h00, OTP_INDEX[7:0]=8'h00, OTP_READ=0, OTP_PROG=0, OTP_LOAD_DISABLE=0, OTP_PWE=0, OTP_PCE=0, OTP_PTM[2:0]=3'b000
S/W Reset	OTP_MASK[7:0]=No Change, OTP_INDEX[7:0]= No Change, OTP_READ= No Change, OTP_PROG= No Change, OTP_LOAD_DISABLE= No Change, OTP_PWE=No Change, OTP_PCE= No Change, OTP_PTM[2:0]= No Change
H/W Reset	OTP_MASK[7:0]=8'h00, OTP_INDEX[7:0]=8'h00, OTP_READ=0, OTP_PROG=0, OTP_LOAD_DISABLE=0, OTP_PWE=0, OTP_PCE=0, OTP_PTM[2:0]=3'b000

Flow Chart

Refer to 6.2.2

Himax Confidential
Do Not Copy

6.2.40 SETDGCLUT: Set DGC LUT (C1h)

C1 H	SETDGCLUT (Set DGC LUT)									
	DNC	D7	D6	D5	D4	D3	D2	D1	D0	HEX
Command	0	1	1	0	0	0	0	0	1	C1
1st parameter									DGC_EN	
2nd parameter	1	D1[7:0]								--
:	1	Dn[7:0]								--
127th parameter	1	D126[7:0]								--

Description

This command is used to set DGC LUT.
DGC_EN: Enable the DGC function
D1[7:0] ~ D126[7:0]:

LUT	D7	D6	D5	D4	D3	D2	D1	D0	Default
1st	R009	R008	R007	R006	R005	R004	R003	R002	00h
2nd	R019	R018	R017	R016	R015	R014	R013	R012	08h
3rd	R029	R028	R027	R026	R025	R024	R023	R022	10h
:	:	:	:	:	:	:	:	:	:
32rd	R319	R318	R317	R316	R315	R314	R313	R312	F8h
33rd	R329	R328	R327	R326	R325	R324	R323	R322	FFh
34th	R001	R000	R011	R010	R021	R020	R031	R030	00h
35th	R041	R040	R051	R050	R061	R060	R071	R070	00h
:	:	:	:	:	:	:	:	:	:
41st	R281	R280	R291	R290	R301	R300	R311	R310	00h
42nd	0	0	0	0	0	0	R321	R320	00h
43rd	G009	G008	G007	G006	G005	G004	G003	G002	00h
44th	G019	G018	G017	G016	G015	G014	G013	G012	08h
45th	G029	G028	G027	G026	G025	G024	G023	G022	10h
:	:	:	:	:	:	:	:	:	:
74th	G319	G318	G317	G316	G315	G314	G313	G312	F8h
75th	G329	G328	G327	G326	G325	G324	G323	G322	FFh
76th	G001	G000	G011	G010	G021	G020	G031	G030	00h
77th	G041	G040	G051	G050	G061	G060	G071	G070	00h
:	:	:	:	:	:	:	:	:	:
83rd	G281	G280	G291	G290	G301	G300	G311	G310	00h
84th	0	0	0	0	0	0	G321	G320	00h
85th	B009	B008	B007	B006	B005	B004	B003	B002	00h
86th	B019	B018	B017	B016	B015	B014	B013	B012	08h
87th	B029	B028	B027	B026	B025	B024	B023	B022	10h
:	:	:	:	:	:	:	:	:	:
116th	B319	B318	B317	B316	B315	B314	B313	B312	F8h
117th	B329	B328	B327	B326	B325	B324	B323	B322	FFh
118th	B001	B000	B011	B010	B021	B020	B031	B030	00h
119th	B041	B040	B051	B050	B061	B060	B071	B070	00h
:	:	:	:	:	:	:	:	:	:
125th	B281	B280	B291	B290	B301	B300	B311	B310	00h
126th	0	0	0	0	0	0	B321	B320	00h

Restrictions

SETEXTC turn on to enable this command

Register Availability

Status	Availability
Sleep Out	Yes
Sleep In	Yes

Himax Confidential
Do Not Copy

Default	

Status	Default Value
Power On Sequence	OTP value
S/W Reset	OTP value
H/W Reset	OTP value

Flow Chart	

Himax Confidential
Do Not Copy

This information contained herein is the exclusive property of Himax and shall not be distributed, reproduced, or disclosed in whole or in part without prior written permission of Himax.

6.2.41 SETID: Set ID (C3h)

C3 H	SETID (Set ID)									
	DNC	D7	D6	D5	D4	D3	D2	D1	D0	HEX
Command	0	1	1	0	0	0	0	1	1	C3
1st parameter	1	ID1[7:0](8'b0)								-
2nd parameter	1		ID2[6:0](7'b0)							-
3rd parameter	1	ID3[7:0](8'b0)								-
Description	This command is used to set DAh, DBh, DCh value									
Restrictions	SETEXTC turn on to enable this command									
Register Availability										

Status	Availability
Sleep Out	Yes

Default

Status	Default Value
Power On Sequence	ID1[7:0]=8'b0, ID2[6:0]=7'b0, ID3[7:0]=8'b0
S/W Reset	No change
H/W Reset	ID1[7:0]=8'b0, ID2[6:0]=7'b0, ID3[7:0]=8'b0

Flow Chart

Himax Confidential
Do Not Copy

6.2.42 SETDDB: Set DDB (C4h)

C4 H	SETDDB (Set DDB)									
	DNC	D7	D6	D5	D4	D3	D2	D1	D0	HEX
Command	0	1	1	0	0	0	1	0	0	C4
1st parameter	1	DDB1[7:0](8'b0)								-
2nd parameter	1	DDB2[7:0](8'b0)								-
3rd parameter	1	DDB3[7:0](8'b0)								-
4th parameter	1	DDB4[7:0](8'b0)								
Description	This command is used to set A1h DDB1~4 value									
Restrictions	SETEXTC turn on to enable this command									
Register Availability	Status: Sleep Out — Availability: Yes									
Default	Status: Power On Sequence — Default Value: OTP value Status: S/W Reset — Default Value: OTP value Status: H/W Reset — Default Value: OTP value									
Flow Chart										

Himax Confidential
Do Not Copy

This information contained herein is the exclusive property of Himax and shall not be distributed, reproduced, or disclosed in whole or in part without prior written permission of Himax.

6.2.43 SETPANEL (CCh)

CC H	SETPANEL(Set panel related register)									
	DNC	D7	D6	D5	D4	D3	D2	D1	D0	HEX
Command	0	1	1	0	0	1	1	0	0	CC
1st parameter	1	-	-	-	SM_PANEL	SS_PANEL	GS_PANEL	REV_PANEL	BGR_PANEL	-

Description

This command is used to set setting of panel related register and make panel module meets below spec from viewpoint of user

Portrait type (mux 1:3)

480(H) x RGB(H) x 864(V)
480(H) x RGB(H) x 854(V)
480(H) x RGB(H) x 800(V)
480(H) x RGB(H) x 640(V)
360(H) x RGB(H) x 640(V)

The default position (display driver, glass, filter order, etc.) of the panel module is always as follow, when MADCTL ś (36h) parameter is 00h. The color filter order is always RGB (if color filters are used).

The 1st pixel on the display
This is also the 1st access location of the frame memory (driver IC) when there is displayed the 1st visible pixel

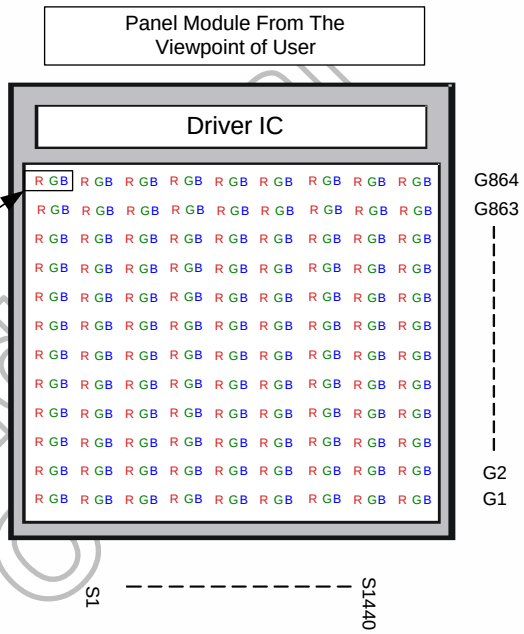

BGR_PANEL: The order of <R><G><B> dot color for module supplier, default value is stored in OTP. If color filter of panel is <B><G><R> type, setting BGR_PANEL = 1, if color filter of panel is <R><G><B> type, setting BGR_PANEL = 0. This bit is to make panel module look like a <R><G><B> type panel form the user viewpoint.
SM_PANEL: Specify the scan order of gate driver output. When SM_PANEL = 0, the shift direction from G1, G2…G431, G432, G433, G434… to G863, G864. When SM_PANEL = 1, the shift direction from G2, G4…G862, G864, G1, G3… to G861, G863.
GS_PANEL: Specify the shift direction of gate driver output. When GS_PANEL = 0, the shift direction from G1 to G864. When GS_PANEL = 1, the shift direction from G864 to G1
SS_PANEL: Specify the shift direction of source driver output. When SS_PANEL = 0, the shift direction from S1 to S1440 When SS_PANEL = 1, the shift direction from S1440 to S1.
REV_PANEL: Select the inversion of the display of all characters and graphics. This setting allows the display of the same data on both normally-white and normally-black panels.
REV_PANEL = 1 normal-white panel
REV_PANEL = 0 normal-black panel

Himax Confidential Do Not Copy

This information contained herein is the exclusive property of Himax and shall not be distributed, reproduced, or disclosed in whole or in part without prior written permission of Himax.

SM_Panel	GS_Panel	Scan direction (IC Non Bump View)
0	0	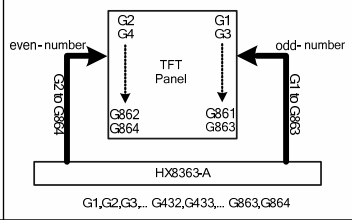
0	1	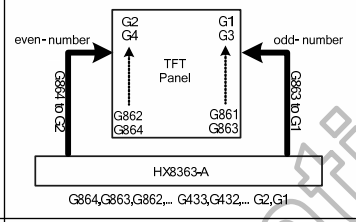
1	0	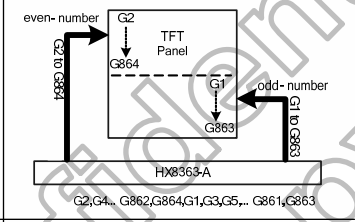
1	1	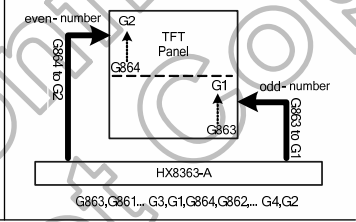

Restrictions

SETEXTC turn on to enable this command

Register Availability

Status	Availability
Sleep Out	Yes

Default

Status	Default Value
Power On Sequence	OTP value
S/W Reset	OTP value
H/W Reset	OTP value

Flow Chart

Himax Confidential
Do Not Copy

6.2.44 SET SPI READ INDEX (FEh)

FE H	SET SPI READ INDEX (Set SPI READ Command Address)									
	DNC	D7	D6	D5	D4	D3	D2	D1	D0	HEX
Command	0	1	1	1	1	1	1	1	0	FE
1st parameter	1	CMD_ADD[7:0]								-
Description	SET SPI READ Command Address for User Define Command									
Restrictions	SETEXTC turn on to enable this command									
Register Availability	Status: Sleep Out — Availability: Yes									
Default	Status: Power On Sequence — Default Value: 00h Status: S/W Reset — Default Value: No Change Status: H/W Reset — Default Value: 00h									
Flow Chart										

Himax Confidential
Do Not Copy

This information contained herein is the exclusive property of Himax and shall not be distributed, reproduced, or disclosed in whole or in part without prior written permission of Himax.

6.2.45 SPIREAD (FFh)

FF H	SPIREAD (Read SPI Command Data)									
	DNC	D7	D6	D5	D4	D3	D2	D1	D0	HEX
Command	0	1	1	1	1	1	1	1	1	FF
1st parameter	1	CMD_DATA1[7:0]								-
:	1	:								-
Nth parameter	1	CMD_DATAN[7:0]								-
Description	Read SPI Command Data for User Define Command									
Restrictions	SETEXTC turn on to enable this command									
Register Availability										

Status	Availability
Sleep Out	Yes

Default

Status	Default Value
Power On Sequence	00h
S/W Reset	No Change
H/W Reset	00h

Flow Chart

Himax Confidential
Do Not Copy

This information contained herein is the exclusive property of Himax and shall not be distributed, reproduced, or disclosed in whole or in part without prior written permission of Himax.

6.2.46 SETGAMMA: Set Gamma Curve Related Setting (E0h)

E0H	SETGAMMAR (Set Gamma Curve Related Setting)									
	DNC	D7	D6	D5	D4	D3	D2	D1	D0	HEX
Command	0	1	1	1	0	0	0	0	0	E0
1st parameter	1	-	-	G1_VRP0[5:0]						
2nd parameter	1	G1_CGMP0[1:0]		G1_VRP1[5:0]						
3rd Parameter	1	G1_CGMP1[1:0]		G1_VRP2[5:0]						
4th Parameter	1	G1_CGMP2[1:0]		G1_VRP3[5:0]						
5th Parameter	1	G1_CGMP3[1:0]		G1_VRP4[5:0]						
6th Parameter	1	G1_CGMP5	G1_CGMP4	G1_VRP5[5:0]						
7th Parameter	1	-	G1_PRP0[6]	-	G1_PKP0[4:0]					
8th Parameter	1	G1_PRP0[5:4]		-	G1_PKP1[4:0]					
9th Parameter	1	G1_PRP0[3:2]		-	G1_PKP2[4:0]					
10th Parameter	1	G1_PRP0[1:0]		-	G1_PKP3[4:0]					
11th Parameter	1	-	G1_PRP1[6]	-	G1_PKP4[4:0]					
12th Parameter	1	G1_PRP1[5:4] (11)		-	G1_PKP5[4:0]					
13th Parameter	1	G1_PRP1[3:2] (10)		-	G1_PKP6[4:0]					
14th Parameter	1	G1_PRP1[1:0] (00)		-	G1_PKP7[4:0]					
15th Parameter	1	-	-	-	G1_PKP8[4:0]					
16th Parameter	1	-	-	G1_VRN0[5:0]						
17th Parameter	1	G1_CGMN0[1:0]		G1_VRN1[5:0]						
18th Parameter	1	G1_CGMN1[1:0]		G1_VRN2[5:0]						
19th Parameter	1	G1_CGMN2[1:0]		G1_VRN3[5:0]						
20th Parameter	1	G1_CGMN3[1:0]		G1_VRN4[5:0]						
21th Parameter	1	G1_CGMN5	G1_CGMN4	G1_VRN5[5:0]						
22th Parameter	1		G1_PRN0[6]	-	G1_PKN0[4:0]					
23th Parameter	1	G1_PRN0[5:4]		-	G1_PKN1[4:0]					
24th Parameter	1	G1_PRN0[3:2]		-	G1_PKN2[4:0]					
25th Parameter	1	G1_PRN0[1:0]		-	G1_PKN3[4:0]					
26th Parameter	1		G1_PRN1[6]	-	G1_PKN4[4:0]					
27th Parameter	1	G1_PRN1[5:4]		-	G1_PKN5[4:0]					
28th Parameter	1	G1_PRN1[3:2]		-	G1_PKN6[4:0]					
29th Parameter	1	G1_PRN1[1:0]		-	G1_PKN7[4:0]					
30th Parameter	1	-	-	-	G1_PKN8[4:0]					

Description

This command is used to set Red Gamma Curve 1 related setting

Register Groups	Positive Polarity	Negative Polarity	Description
Center Adjustment	G1_PRP0 6-0	G1_PRN0 6-0	Variable resistor (PRP/N0) for center adjustment
	G1_PRP1 6-0	G1_PRN1 6-0	Variable resistor (PRP/N1)for center adjustment
Macro Adjustment	G1_PKP0 4-0	G1_PKN0 4-0	32-to-1 selector (voltage level of grayscale 3)
	G1_PKP1 4-0	G1_PKN1 4-0	32-to-1 selector (voltage level of grayscale 7)
	G1_PKP2 4-0	G1_PKN2 4-0	32-to-1 selector (voltage level of grayscale 19)
	G1_PKP3 4-0	G1_PKN3 4-0	32-to-1 selector (voltage level of grayscale 25)
	G1_PKP4 4-0	G1_PKN4 4-0	32-to-1 selector (voltage level of grayscale 32 for positive polarity and grayscale 31 for negative polarity)
	G1_PKP5 4-0	G1_PKN5 4-0	32-to-1 selector (voltage level of grayscale 38)
	G1_PKP6 4-0	G1_PKN6 4-0	32-to-1 selector (voltage level of grayscale 44)
	G1_PKP7 4-0	G1_PKN7 4-0	32-to-1 selector (voltage level of grayscale 56)
	G1_PKP8 4-0	G1_PKN8 4-0	32-to-1 selector (voltage level of grayscale 60)
Offset Adjustment	G1_VRP0 5-0	G1_VRN0 5-0	Variable resistor (VRP/N0)for offset adjustment
	G1_VRP1 5-0	G1_VRN1 5-0	Variable resistor (VRP/N1)for offset adjustment
	G1_VRP2 5-0	G1_VRN2 5-0	Variable resistor (VRP/N2)for offset adjustment
	G1_ VRP3 5-0	G1_VRN3 5-0	Variable resistor (VRP/N3)for offset adjustment
	G1_VRP4 5-0	G1_VRN4 5-0	Variable resistor (VRP/N4)for offset adjustment
	G1_VRP5 5-0	G1_VRN5 5-0	Variable resistor (VRP/N5)for offset adjustment

G1_CGMP/N0: Select to change gamma resistor stream, Please refer to Figure 5.4.
G1_CGMP/N1: Select to change gamma resistor stream, Please refer to Figure 5.4.
G1_CGMP/N2: Select to change gamma resistor stream, Please refer to Figure 5.4.
G1_CGMP/N3: Select to change gamma resistor stream. Please refer to Figure 5.4.

Himax Confidential Do Not Copy

This information contained herein is the exclusive property of Himax and shall not be distributed, reproduced, or disclosed in whole or in part without prior written permission of Himax.

	G1_CGMP/N4: Select to change gamma resistor stream. Please refer to Figure 5.4. **G1_CGMP/N5:** Select to change gamma resistor stream. Please refer to Figure 5.4.
Restriction	SETEXTC turn on to enable this command
Register Availability	Status: Sleep Out — Availability: Yes
Default	Status / Default Value: Power On Sequence: OTP value S/W Reset: OTP value H/W Reset: OTP value
Flow Chart	

Himax Confidential
Do Not Copy

This information contained herein is the exclusive property of Himax and shall not be distributed, reproduced, or disclosed in whole or in part without prior written permission of Himax.

7. Power Supply

7.1 Power Supply Setup

7.1.1 Architecture 1 with PFM circuit

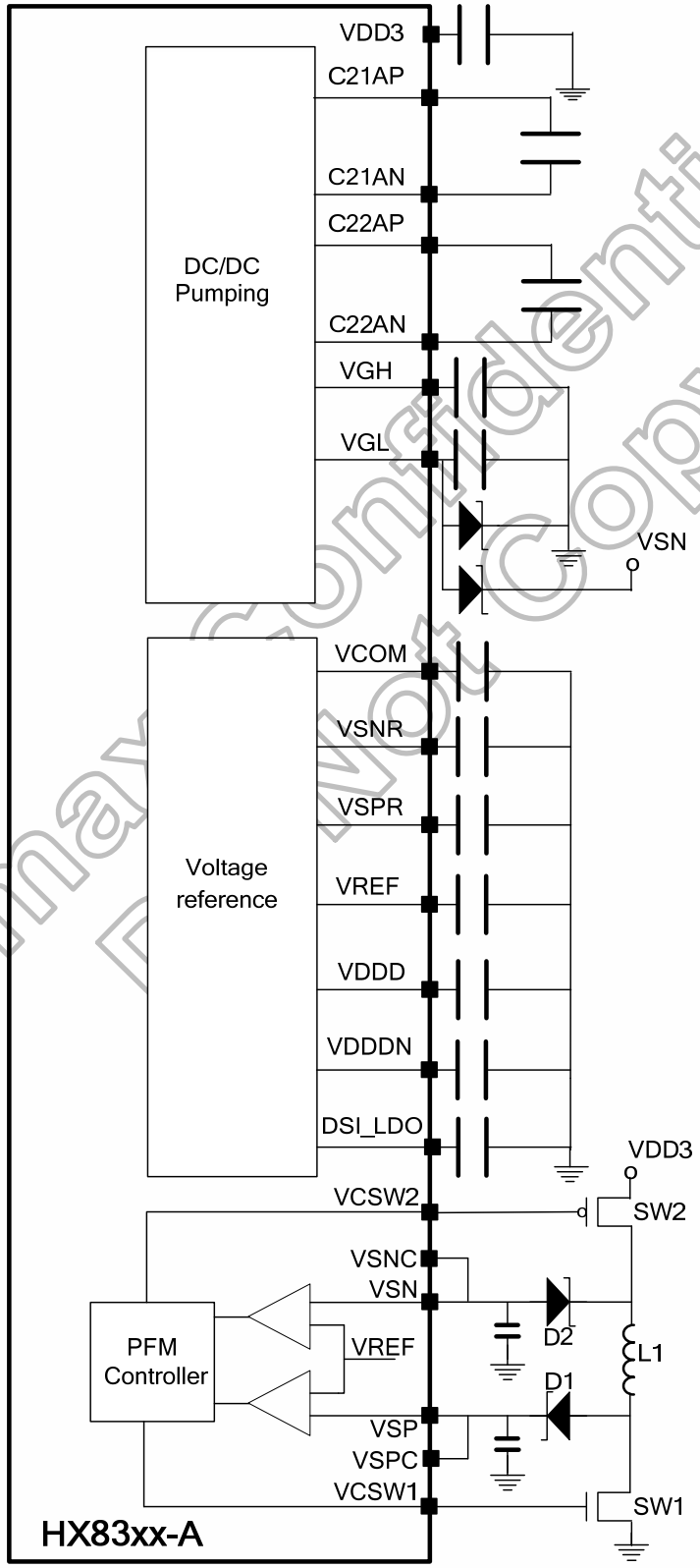

Figure 7.1 Power supply with PFM circuit

Himax Confidential
Do Not Copy

7.2 Voltage Configuration

The HX83xx-A has an internal power supply circuit to drive TFTLCD panel. Please set up each voltage output according to the LCD panel.

Name	Function	Set up Value	Note
VREF	Reference voltage from internal band gap circuit	1.8V	-
VSP	DC/DC converter circuit output	4.7V ~ 5.5V	Do not exceed 6 V
VSN	DC/DC converter circuit output	-4.7V ~ -5.5V	Do not exceed 6V
VSPC	DC/DC converter circuit output	4.7V ~ 5.5V	Do not exceed 6 V
VSNC	DC/DC converter circuit output	-4.7V ~ -5.5V	Do not exceed 6V
VSPR	Reference voltage for gamma circuit	3.5V ~ (VSP – 0.5V)	Reference register
VSNR	Reference voltage for gamma circuit	-3.5V ~ (VSN + 0.5V)	Reference register
VDDDN	Logic power supply	-2.5V	-
VGH	Positive gate driver output voltage level	15V, 18V, 20V	Depend on VSP and VSN
VGL	Negative gate driver output voltage level	-8V, -10V, -12V	Depend on VSP and VSN
VCOM	VCOM DC voltage	-2V ~ 0V	-
VCOMR	External VCOM DC voltage	-2V ~ 0V	-
DSI_LDO	Analog power for MIPI DSI circuit	1.2V ~ 1.3V	-

Table 7.1 Power Supply Voltage Configuration

Pad Name	Connection	Typical Component Value
VCOM	Connect to Capacitor (Max 6V): VCOM ---(-)----| |--- (+)----- VSSA	2.2 uF
VGH	Connect to Capacitor (Max 25V): VGH ---(+)----| |--- (-)----- VSSA	1.0 uF
C22AP - C22AN	Connect to Capacitor (Max 25V): C22AP ---(+)----| |--- (-)-----C22AN	1.0 uF
C21AP - C21AN	Connect to Capacitor (Max 25V): C21AP ---(+)----| |--- (-)-----C21AN	1.0 uF
VSPR	Connect to Capacitor (Max 10V): VSPR ---(+)----| |--- (-)-----VSSA	1.0 uF
VSNR	Connect to Capacitor (Max 10V): VSNR ---(+)----| |--- (-)-----VSSA	1.0 uF
VDDD	Connect to Capacitor (Max 6V): VDDD ---(+)----| |--- (-)-----VSSA	1.0 uF
VDDDN	Connect to Capacitor (Max 6V): VDDDN ---(+)----| |--- (-)-----VSSA	1.0 uF
VREF	Connect to Capacitor (Max 5V): VREF ---(-)----| |--- (+)----- VSSA	1.0 uF
VSP	Connect to Capacitor (Max 10V):VSP ---(+)----| |--- (-)-----VSSA	2.2 uF
	Schottky Diode for VSP(VR≥30V)	VF < 0.35V / 10mA @ 25°C, VR ≥30V (Recommended diode: KDR720F)
VSN	Connect to Capacitor (Max 10V):VSN ---(+)----| |--- (-)-----VSSA	2.2 uF
	Schottky Diode for VSP(VR≥30V)	VF < 0.35V / 10mA @ 25°C, VR ≥30V (Recommended diode: KDR720F)
VDD3	Connect to Capacitor (Max 6V): VDD3 ---(+)----| |--- (-)-----VSSA	1.0 uF
DSI_LDO	Connect to Capacitor (Max 6V): DSI_LDO ---(+)----| |--- (-)----DSI_VSS	1.0 uF
VGL	Connect to Capacitor (Max 25V): VGL ---(-)----| |--- (+)----- VSSA	1.0 uF
	Connect to Schottky Diode(VR≥30V): VSSA ---(-)----∫◄--- (+)---- VGL	VF < 0.4V / 20mA @ 25°C, VR ≥30V (Recommended diode: RB521S-30)
	Connect to Schottky Diode(VR≥30V): VSN ---(-)----∫◄--- (+)---- VGL	VF < 0.4V / 20mA @ 25°C, VR ≥30V (Recommended diode: RB521S-30)

Table 7.2 Adoptability of Component

Himax Confidential
Document Copy

This information contained herein is the exclusive property of Himax and shall not be distributed, reproduced, or disclosed in whole or in part without prior written permission of Himax.

8. Electrical Characteristics

8.1 Absolute Maximum Ratings

The absolute maximum ratings are list on Table 8.1. When used out of the absolute maximum ratings, the LSI may be permanently damaged. Using the LSI within the following electrical characteristics limit is strongly recommended for normal operation. If these electrical characteristic conditions are exceeded during normal operation, the LSI will malfunction and cause poor reliability.

Item	Symbol	Unit	Value	Note
Power Supply Voltage 1	VDD1~ VSSD	V	-0.3 to +4.6	**Note**(1),(2)
Power Supply Voltage 2	VDD2 ~ VSSA	V	-0.3 to +4.6	**Note**(1),(3)
Power Supply Voltage 3	VDD3 ~ VSSA	V	-0.3 to +4.6	**Note**(1) (4)
Power Supply Voltage 4	DSI_VCC ~ DSI_VSS	V	-0.3 to +4.6	**Note**(1) (5)
Power Supply Voltage 5	VSP ~ VSSA	V	-0.3 to +8	**Note**(6)
Power Supply Voltage 6	VSSA ~ VSN	V	0 to -8	**Note**(7)
Power Supply Voltage 7	VGH ~ VSSA	V	-0.3 to +25	**Note**((8)
Power Supply Voltage 8	VSSA ~ VGL	V	0 to -16	**Note**(9)
Operating Temperature	Topr	°C	-40 to +85	**Note**(10)
Storage Temperature	Tstg	°C	-55 to +110	**Note**(11)

Note: (1) VDD1, VSSD must be maintained.
(2) To make sure VDD1 ≥ VSSD.
(3) To make sure VDD2≥ VSSA.
(4) To make sure VDD3≥ VSSA.
(5) To make sure DSI_VCC ≥ DSI_VSS.
(6) To make sure VSP ≥ VSSA.
(7) To make sure VSSA ≥ VSN
(8) To make sure VGH ≥ VSSA.
(9) To make sure VSSA ≥ VGL
VGH +|VGL| < 32V
(10) For die and wafer products, specified up to +85℃.
(11) This temperature specifications apply to the TCP package.

Table 8.1 Absolute Maximum Rating

8.2 ESD Protection Level

Mode	Test Condition	Criteria	Standard
Human Body Model	C = 100 pF, R = 1.5 kΩ	±2.0KV	MIL-STD-883F Method 3015.7
Machine Model	C = 200 pF, R = 0.0 Ω	±200V	EIA/JEDEC JESD22-A115-A

Table 8.2 ESD Protection Level

Himax Confidential
Do Not Copy

This information contained herein is the exclusive property of Himax and shall not be distributed, reproduced, or disclosed in whole or in part without prior written permission of Himax.

8.3 DC Characteristics

(VDD= 2.3~3.3V, VDDI = 1.65~1.95V, Ta = -40 ~ 85 °C)

Item	Symbol	Unit	Test Condition	Min.	Typ.	Max.	Note
Input high voltage	V_{IH}	V	VDDI= 1.65 ~ 3.3V VDD2= 2.3 ~ 3.3V VDD3= 2.3 ~ 3.3V	0.7 V_{DDI}	-	VDDI	V
Input low voltage	V_{IL}	V		0	-	0.3 V_{DDI}	V
PVSS	V_{IH}	V	PVSS	7.25V	7.5V	7.75V	V
	V_{IL}	V					
Output high voltage(1) (DB0-23 Pins)	V_{OH1}	V	I_{OH} = -1.0 mA	0.8 V_{DDI}	-	VDDI	V
Output low voltage (DB0-23 Pins)	V_{OL1}	V	VDDI= 1.65 ~ 2.4V I_{OL} = 1.0 mA	0	-	0.2 V_{DDI}	V
Output high voltage (TE Pin)	V_{OH1}	V	I_{OH} = -1.0 mA	0.8 V_{DDI}	-	VDDI	V
Output low voltage (TE Pin)	V_{OL1}	V	VDDI= 1.65 ~ 2.4V I_{OL} = 1.0 mA	0	-	0.2 V_{DDI}	V
Logic High level input current	I_{IH}	uA	VSYNC, HSYNC	-	-	TBD	uA
			NRESET, SCL, NCS	-	-	TBD	uA
	I_{IHD}	uA	DB[23…0], SDI, SCL	-	-	TBD	uA
			DB[23…0]	-	-	TBD	uA
Logic Low level input current	I_{IL}	uA	VSYNC, HSYNC	TBD	-	-	uA
			NRESET, (SCL), NCS	TBD	-	-	uA
	I_{ILD}	uA	DB[23…0], SDI, SCL	TBD	-	-	uA
			DB[17…0]	TBD	-	-	uA
VDDI leakage current	$I_{Li(VDDI)}$	mA	VDDI= 1.65 ~ 1.95V	-	-	TBD	mA
VDD leakage current	$I_{Li(VDD)}$	mA	VDD= 2.3 ~ 3.3V	-	-	TBD	mA

Note: (1) The PVSS pin is open on normal and setting when OTP programming condition.

Table 8.3 DC Characteristics

Himax Confidential
Do Not Copy

This information contained herein is the exclusive property of Himax and shall not be distributed, reproduced, or disclosed in whole or in part without prior written permission of Himax.

(VDD= 2.3~3.3V, VDDI = 1.65~1.95V, Ta = -40 ~ 85 °C)

Mode of operation	Image	Current consumption			
		Normal		Maximum	
		IDDI (mA)	IDD (mA)	IDDI (mA)	IDD (mA)
Sleep Out Mode	Note 1	TBD	TBD	TBD	TBD
	Note 2	TBD	TBD	TBD	TBD
	Note 3	TBD	TBD	TBD	TBD
	Note 4	TBD	TBD	TBD	TBD
	Note 5	TBD	TBD	TBD	TBD
Sleep Out Mode	Note 5	TBD	TBD	TBD	TBD
Sleep Out Mode	Note 5	TBD	TBD	TBD	TBD
Sleep Out Mode	Note 5	TBD	TBD	TBD	TBD
Sleep In Mode	N/A	TBD	TBD	TBD	TBD
Sleep Out Mode	16.7 M Colors Note 2 CPU Access @ 15 fps	TBD	TBD	TBD	TBD
	16.7 M Colors Note 2 CPU Access @ 25 fps	TBD	TBD	TBD	TBD

Table 8.4 Power consumptions

Note:

(1) All pixels black
(2) Checker board one by one
(3) Checker board 4 by 4
(4) Greyscale from top to bottom
(5) Absolute Worst Case Patterns: Defined by display supplier

Typical Case:
T_A = 25ºC
VDD = 2.5/2.75V
VDDI = 1.8V
Worst Case:
T_A = -30 to70ºC
VDD = 2.3V to 2.9V
VDDI = 1.65V to 1.95V
Includes Process Variance.

Himax Confidential
Do Not Copy

This information contained herein is the exclusive property of Himax and shall not be distributed, reproduced, or disclosed in whole or in part without prior written permission of Himax.

8.4 AC Characteristics

8.4.1 Serial Interface Characteristics (3-Pin Serial)

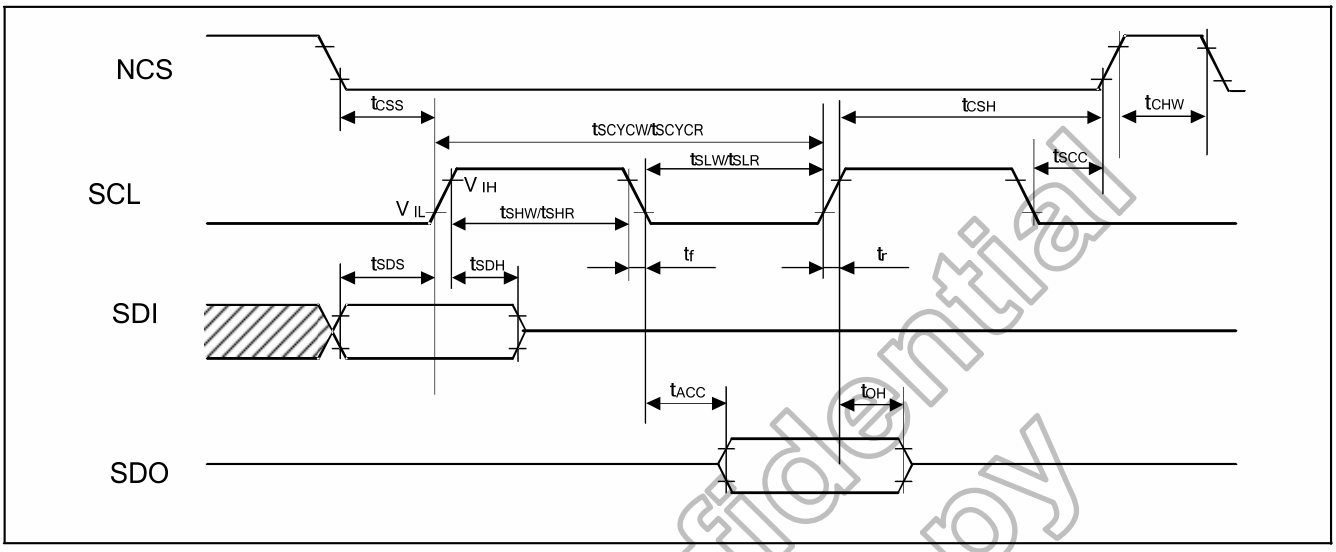

Figure 8.1 3-pin Serial Interface Characteristics

(VSSA=VSSD=0V, VDD1=1.65V to 1.95V, VDD2=2.3 to 3.3V, VDD3=2.3 to 3.3V, Ta = -30 to 70°C)

Parameter	Symbol	Conditions	MIN	TYP	MAX	Unit
Serial clock cycle (Write) SCL "H" pulse width (Write) SCL "L" pulse width (Write)	t_{SCYCW} t_{SHW} t_{SLW}	SCL	80 30 30		- - -	ns
Data setup time (Write) Data hold time (Write)	t_{SDS} t_{SDH}	SDI	10 10		- -	ns
Serial clock cycle (Read) SCL "H" pulse width (Read) SCL "L" pulse width (Read)	t_{SCYCR} t_{SHR} t_{SLR}	SCL	150 60 60		- - -	ns
Access rime	t_{ACC}	SDO For maximum C_L=30pF For maximum C_L=8pF	10		60	ns
Output disable time	t_{OH}	SDO For maximum C_L=30pF For maximum C_L=8pF	15		100	ns
SCL to Chip select	t_{SCC}	NCS	30		-	ns
NCS "H" pulse width	t_{CHW}	NCS	60		-	ns
NCS-SCL time (write) NCS-SCL time (write	t_{CSS} t_{CSH}	NCS	30 30		-	ns
NCS-SCL time (Read) NCS-SCL time (Read)	t_{CSS} t_{CSH}	NCS	60 65		-	ns

Note: The input signal rise time and fall time (tr, tf) is specified at 15 ns or less.
Logic high and low levels are specified as 30% and 70% of VDD1 for Input signals.

Input Signal Slope

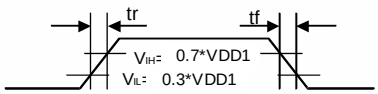

Output Signal Slope

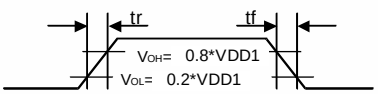

Himax Confidential
Do Not Copy

8.4.2 RGB Interface Characteristics

Vertical Timings for RGB I/F

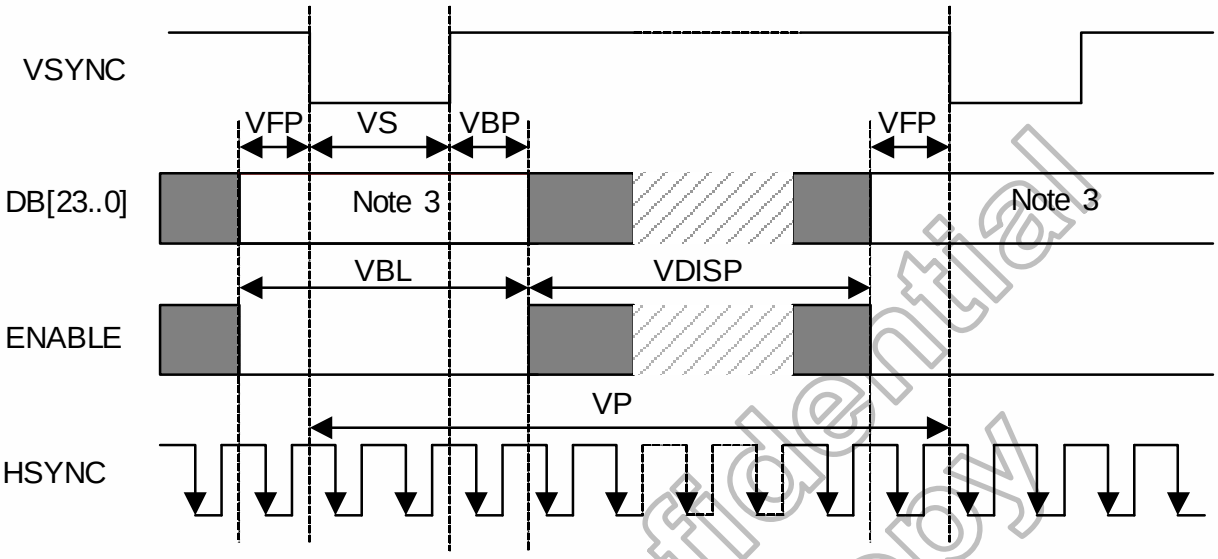

Figure 8.2 Vertical Timings for RGB I/F

(Resolution=480x854, VSSA=VSSD=0V, VDD1=1.65V to 1.95V, VDD2=2.3 to 3.3V, VDD3=2.3 to 3.3V, Ta = -30 to 70°C)

Item	Symbol	Condition	Min.	Typ.	Max.	Unit
Vertical cycle	VP	-	860	-	864	Line
Vertical low pulse width	VS	-	2	-	4	Line
Vertical front porch	VFP	-	2	-	4	Line
Vertical back porch	VBP	-	2	-	4	Line
Vertical data start point	-	VS+VBP	4	-	8	Line
Vertical blanking period	VBL	VS+VBP+VFP	6	-	10	Line
Vertical active area	-	VDISP	-	854	-	Line
Vertical Refresh rate	VRR	-	50	-	70	Hz

Note: (1) Signal rise and fall times are equal to or less than 20 ns.
(2) Input signals are measured by 0.30 x VDD1 for low state and 0.70 x VDD1 for highstate.
(3) Data lines can be set to "High" or "Low" during blanking time – Don't care.

(Resolution=480x800, VSSA=VSSD=0V, VDD1=1.65V to 1.95V, VDD2=2.3 to 3.3V, VDD3=2.3 to 3.3V, Ta = -30 to 70°C)

Item	Symbol	Condition	Min.	Typ.	Max.	Unit
Vertical cycle	VP	-	806	-	810	Line
Vertical low pulse width	VS	-	2	-	4	Line
Vertical front porch	VFP	-	2	-	4	Line
Vertical back porch	VBP	-	2	-	4	Line
Vertical data start point	-	VS+VBP	4	-	8	Line
Vertical blanking period	VBL	VS+VBP+VFP	6	-	10	Line
Vertical active area	-	VDISP	-	800	-	Line
Vertical Refresh rate	VRR	-	50	-	70	Hz

Note: (1) Signal rise and fall times are equal to or less than 20 ns.
(2) Input signals are measured by 0.30 x VDD1 for low state and 0.70 x VDD1 for highstate.
(3) Data lines can be set to "High" or "Low" during blanking time – Don't care.

Table 8.5 Vertical Timings for RGB I/F

Himax Confidential
Do Not Copy

Horizontal Timings for RGB I/F

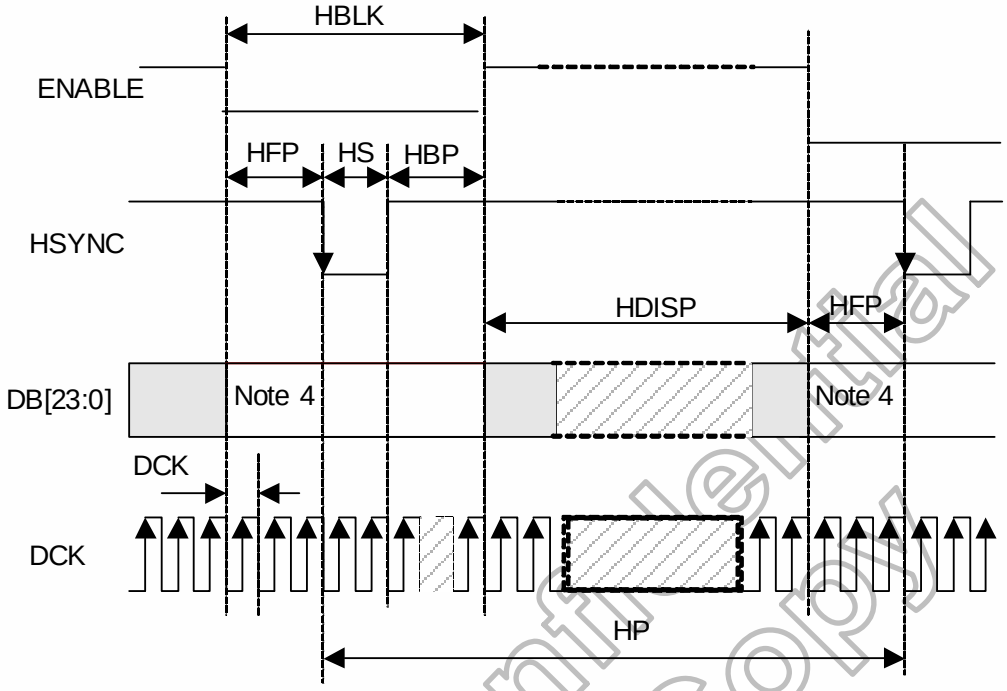

Figure 8.3 Horizontal Timing for RGB I/F

(Resolution=480x854, VSSA=VSSD=0V, VDD1=1.65V to 1.95V, VDD2=2.3 to 3.3V, VDD3=2.3 to 3.3V, Ta = -30 to 70°C)

Item	Symbol	Condition	Min.	Typ.	Max.	Unit
HS cycle	HP	Note 3	504	-	568	DCK
HS low pulse width	HS	-	5	-	256	DCK
Horizontal back porch	HBP	-	5	-	256	DCK
Horizontal front porch	HFP	-	5	-	256	DCK
Horizontal data start point	-	HS+HBP	19	-	83	DCK
			700	-	-	ns
Horizontal blanking period	HBLK	HS+HBP+HFP	24	-	88	DCK
Horizontal active area	HDISP	-	-	480	-	DCK
Pixel clock frequency When RGB I/F is running	DCK	VRR = Min. 50 Hz – Max. 70 Hz	21.6	-	34.3	MHz
			29.1	-	46.2	ns

Note: (1) Signal rise and fall times are equal to or less than 20 ns.
(2) Input signals are measured by 0.30 x VDD1 for low state and 0.70 x VDD1 for high state.
(3) HP is multiples of eight DCK.
(4)Data lines can be set to “High” or “Low” during blanking time – Don’t care.

(Resolution=480x800, VSSA=VSSD=0V, VDD1=1.65V to 1.95V, VDD2=2.3 to 3.3V, VDD3=2.3 to 3.3V, Ta = -30 to 70°C)

Item	Symbol	Condition	Min.	Typ.	Max.	Unit
HS cycle	HP	Note 3	504	-	568	DCK
HS low pulse width	HS	-	5	-	256	DCK
Horizontal back porch	HBP	-	5	-	256	DCK
Horizontal front porch	HFP	-	5	-	256	DCK
Horizontal data start point	-	HS+HBP	19	-	83	DCK

Himax Confidential
Do Not Copy

			700	-	-	ns
Horizontal blanking period	HBLK	HS+HBP+HFP	24	-	88	DCK
Horizontal active area	HDISP	-	-	480	-	DCK
Pixel clock frequency When RGB I/F is running	DCK	VRR = Min. 50 Hz – Max. 70 Hz	20.3	-	32.2	MHz
			31	-	49.2	ns

Note: (1) Signal rise and fall times are equal to or less than 20 ns.
(2) Input signals are measured by 0.30 x VDD1 for low state and 0.70 x VDD1 for high state.
(3) HP is multiples of eight DCK.
(4)Data lines can be set to “High” or “Low” during blanking time – Don’t care.

Table 8.6 Horizontal Timings for RGB I/F

Himax Confidential
Do Not Copy

This information contained herein is the exclusive property of Himax and shall not be distributed, reproduced, or disclosed in whole or in part without prior written permission of Himax.

General Timings for RGB I/F

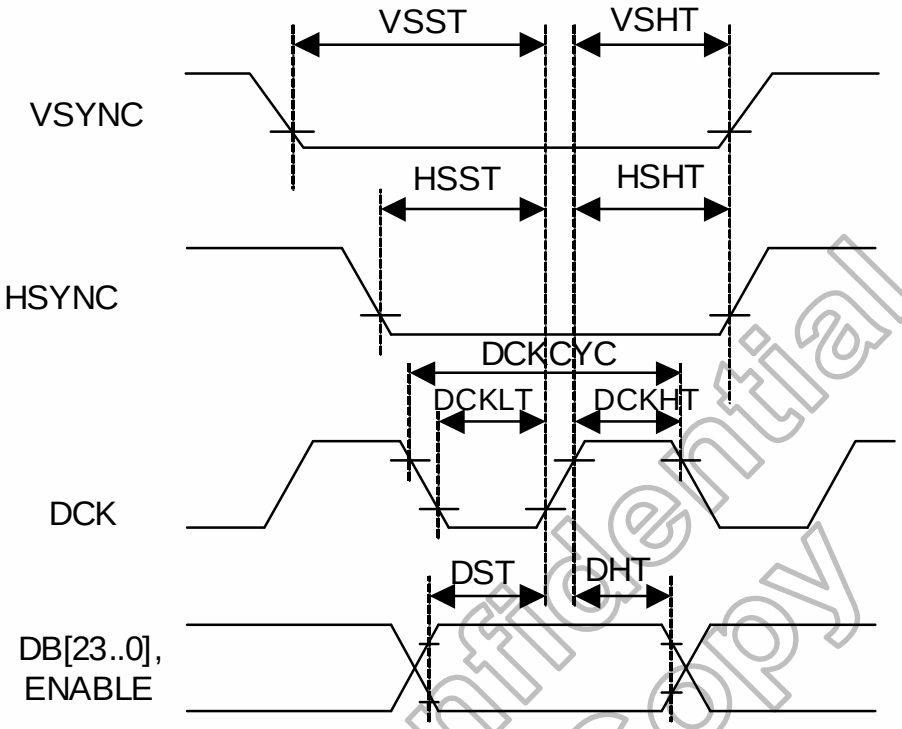

Figure 8.4 General Timings for RGB I/F

(Resolution=480x854, VSSA=VSSD=0V, VDD1=1.65V to 1.95V, VDD2=2.3 to 3.3V, VDD3=2.3 to 3.3V, Ta = -30 to 70°C)

Item	Symbol	Condition	Min.	Typ.	Max.	Unit
Vertical sync. Setup time	VSST	-	5	-	-	ns
Vertical sync. Hold time	VSHT	-	5	-	-	ns
Horizontal sync. Setup time	HSST	-	5	-	-	ns
Horizontal sync. Hold time	HSHT	-	5	-	-	ns
Pixel clock cycle When RGB I/F is running	DCKCYC	VRR = Min . 50 Hz Max. 70 Hz	29.1 (Note 3)	-	46.2 (Note 4)	ns
Pixel clock low time	DCKLT	-	5	-	-	ns
Pixel clock high time	DCKHT	-	5	-	-	ns
Data setup time DB[23:0]	DST	-	5	-	-	ns
Data Hold time DB[23:0]	DHT	-	5	-	-	ns

Note: (1) Signal rise and fall times are equal to or less than 20 ns.
(2) Input signals are measured by 0.30 x VDD1 for low state and 0.70 x VDD1 for high state.
(3) 34.3 MHz
(4) 21.6 MHz

(Resolution=480x800, VSSA=VSSD=0V, VDD1=1.65V to 1.95V, VDD2=2.3 to 3.3V, VDD3=2.3 to 3.3V, Ta = -30 to 70°C)

Item	Symbol	Condition	Min.	Typ.	Max.	Unit
Vertical sync. Setup time	VSST	-	5	-	-	ns
Vertical sync. Hold time	VSHT	-	5	-	-	ns
Horizontal sync. Setup time	HSST	-	5	-	-	ns
Horizontal sync. Hold time	HSHT	-	5	-	-	ns

Himax Confidential
Do Not Copy

This information contained herein is the exclusive property of Himax and shall not be distributed, reproduced, or disclosed in whole or in part without prior written permission of Himax.

Pixel clock cycle When RGB I/F is running	DCKCYC	VRR = Min . 50 Hz Max. 70 Hz	31 (Note 3)	-	49.2 (Note 4)	ns
Pixel clock low time	DCKLT	-	5	-	-	ns
Pixel clock high time	DCKHT	-	5	-	-	ns
Data setup time DB[23:0]	DST	-	5	-	-	ns
Data Hold time DB[23:0]	DHT	-	5	-	-	ns

Note: (1) Signal rise and fall times are equal to or less than 20 ns.
(2) Input signals are measured by 0.30 x VDD1 for low state and 0.70 x VDD1 for high state.
(3) 32.2 MHz
(4) 20.3 MHz

Table 8.7 General Timings for RGB I/F

Himax Confidential
Do Not Copy

This information contained herein is the exclusive property of Himax and shall not be distributed, reproduced, or disclosed in whole or in part without prior written permission of Himax.

8.4.3 Reset Input Timing

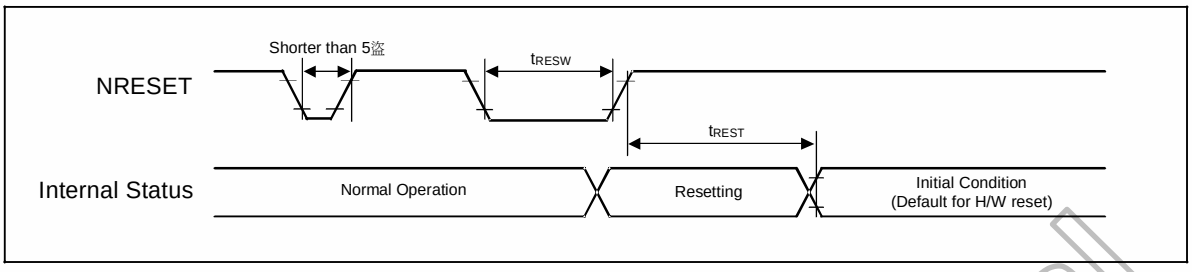

Figure 8.5 Reset Input Timing

Symbol	Parameter	Related Pins	MIN	TYP	MAX	Note	Unit
tRESW	*1) Reset low pulse width	NRESET	10	-	-	-	μs
tREST	*2) Reset complete time	-	-	-	5	When reset is applied during Sleep In mode	ms
		-		-	120	When reset is applied during Sleep Out mode	ms

Table 8.8 Reset Timing

Note: 1. Spike due to an electrostatic discharge on NRESET line does not cause irregular system reset according to the table below.

NRESET Pulse	Action
Shorter than 5 μ	Reset Rejected
Longer than 10 μs	Reset
Between 5 μs and 10 μs	Reset Start

2. During the resetting period, the display will be blanked (The display is entering blanking sequence, which maximum time is 120 ms, when Reset Starts in Sleep Out –mode. The display remains the blank state in Sleep In –mode) and then returns to Default condition for H/W reset.
3. During Reset Complete Time, ID2 value in OTP will be latched to internal register during this period. This loading is done every time when there is H/W reset complete time (tREST) within 5ms after a rising edge of NRESET.
4. Spike Rejection also applies during a valid reset pulse as shown below:

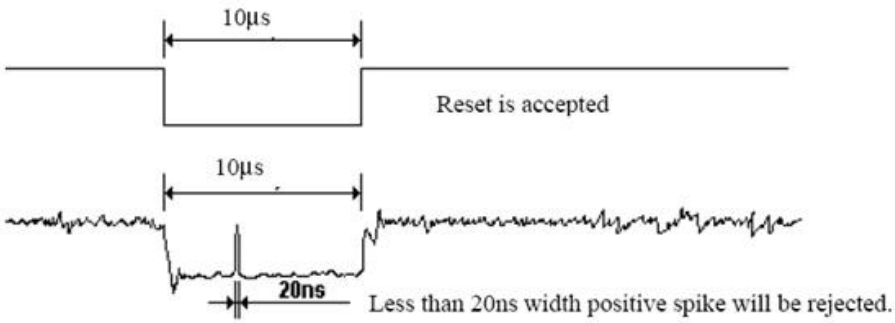

5. When Reset is applied during Sleep In Mode.
6. When Reset is applied during Sleep Out Mode.
7. It is necessary to wait 5msec after releasing NRESET before sending commands. Also Sleep Out command cannot be sent for 120msec.

Himax Confidential
Do Not Copy

This information contained herein is the exclusive property of Himax and shall not be distributed, reproduced, or disclosed in whole or in part without prior written permission of Himax.

9. Layout Recommendation

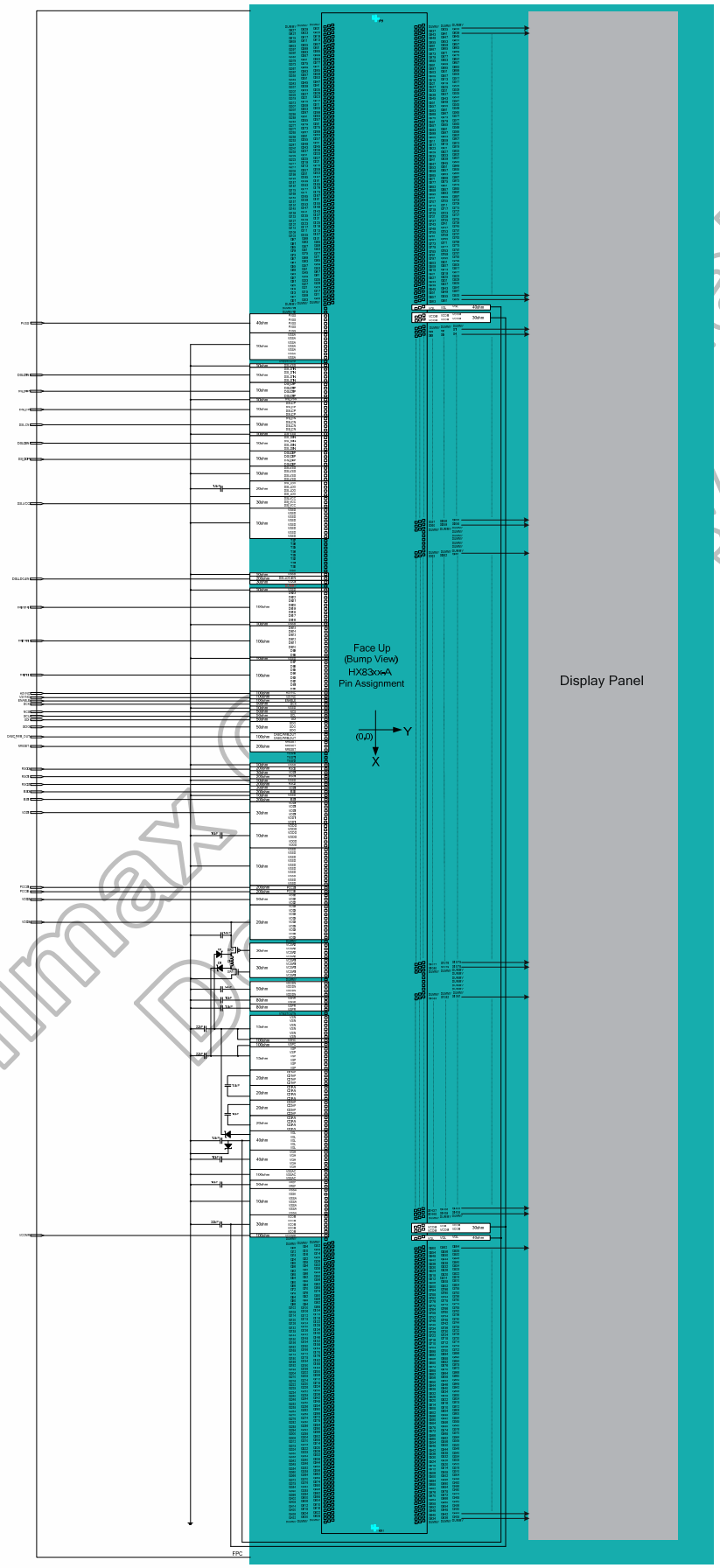

Figure 9.1 Layout Recommendation

Himax Confidential
This information contained herein is the exclusive property of Himax and shall not be distributed, reproduced, or disclosed in whole or in part without prior written permission of Himax.

Maximum Layout Resistance

Name	Type	Maximum Series Resistance	Unit
VDD2	Power supply	50	Ω
VDD3	Power supply	20	Ω
VDD1	Power supply	30	Ω
VSSD	Power supply	10	Ω
VSSA	Power supply	10	Ω
DSI_VCC	Power supply	30	Ω
DSI_VSS	Power supply	10	Ω
VSSAC	Power supply	100	Ω
PVSS	Input	40	Ω
RSO2-0	Input	200	Ω
PCCS0, PCCS1	Input	200	Ω
VCSW1, VCSW2	Output	30	Ω
NRESET	Input	200	Ω
DCK	Input	50	Ω
HSYNC, VSYNC, ENABLE	Input	100	Ω
NCS	Input	50	Ω
SCL, SDI	Input	50	Ω
SDO	Output	50	Ω
DB[23:0]	Output	100	Ω
CABC_PWM_OUT	Output	100	Ω
VCOM	Output	30	Ω
VCOMR	Iutput	100	Ω
BS0, BS1	Input	200	Ω
DSI_LDO_EN	Input	200	Ω
DSI_D0P	Input + Output	10	Ω
DSI_D0N	Input + Output	10	Ω
DSI_CP	Input	10	Ω
DSI_CN	Input	10	Ω
DSI_D1P	Input	10	Ω
DSI_D1N	Input	10	Ω
VDDD	Capacitor Connection	10	Ω
VDDDN	Capacitor Connection	50	Ω
VSP, VSN	Capacitor Connection	15	Ω
VSPC, VSNC	Capacitor Connection	100	Ω
VSPR, VSNR	Capacitor Connection	80	Ω
VREF	Capacitor Connection	50	Ω
VGH,VGL	Capacitor Connection	40	Ω
DSI_LDO	Capacitor Connection	20	Ω
C21AP,C21AN,C22AP,C22AN	Capacitor Connection	20	Ω

Table 9.1 Maximum Layout Resistance

Himax Confidential
Do Not Copy

This information contained herein is the exclusive property of Himax and shall not be distributed, reproduced, or disclosed in whole or in part without prior written permission of Himax.

10. OTP Programming

10.1 OTP table

		HEX	D7	D6	D5	D4	D3	D2	D1	D0
31	SETPOWER	0A	Valid_POWER	FS12	FS11	FS10	-	AP2	AP1	AP0
		0B	-	-	-	-	BT3	BT2	BT1	BT0
		0C	DT1	DT0	DC1	DC0	DC_DIV3	DC_DIV2	DC_DIV1	DC_DIV0
		0D	-	DTPS2	DTPS1	DTPS0	-	DTP2	DTP1	DTP0
		0E	-	DTNS2	DTPN1	DTNS0	-	DTN2	DTN1	DTN0
		0F	-	-	-	BTP4	BTP3	BTP2	BTP1	BTP0
		10	-	-	-	BTN4	BTN3	BTN2	BTN1	BTN0
		11	VRHP7	VRHP6	VRHP5	VRHP4	VRHP3	VRHP2	VRHP1	VRHP0
		12	VRHN7	VRHN6	VRHN5	VRHN4	VRHN3	VRHN2	VRHN1	VRHN0
		13	-	-	VRMP5	VRMP4	VRMP3	VRMP2	VRMP1	VRMP0
		14	-	-	VRMN5	VRMN4	VRMN3	VRMN2	VRMN1	VRMN0
33	SETRGBIF	1A	Valid_RGBIF	-	-	-	DPL (0)	HSPL (0)	VSPL (0)	EPL (1)
34	SETCYC	1B	Valid_CYC	-	-	-	NW[1:0] (01)		—	
		1C	SON[7:0]							
		1D	SOFF[7:0]							
		1E	EQS[7:0]							
		1F	EQ_ON[7:0]							
		20	GDON[7:0]							
		21	GDOFF[7:0]							
		22	GVSSP1[7:0]							
		23	GVSSP2[7:0]							
36	SETVCOM (OTPx3)	26	VCMC07	VCMC06	VCMC05	VCMC04	VCMC03	VCMC02	VCMC01	VCMC00
		27	VCMC17	VCMC16	VCMC15	VCMC14	VCMC13	VCMC12	VCMC11	VCMC10
		28	VCMC27	VCMC26	VCMC25	VCMC24	VCMC23	VCMC22	VCMC21	VCMC20
C1	SETDGCLUT	2C	Vaild_DGCLUT	-	-	-	-	-	-	DGC_EN
C4	SETDDB-0	2D	DDB1[7:0](8'b0)							
		2E	DDB2[7:0](8'b0)							
		2F	DDB3[7:0](8'b0)							
		30	DDB4[7:0](8'b0)							
C4	SETDDB-1	31	DDB1[7:0](8'b0)							
		32	DDB2[7:0](8'b0)							
		33	DDB3[7:0](8'b0)							
		34	DDB4[7:0](8'b0)							
C4	SETDDB-2	35	DDB1[7:0](8'b0)							
		36	DDB2[7:0](8'b0)							
		37	DDB3[7:0](8'b0)							
		38	DDB4[7:0](8'b0)							
CC	SETPANEL	3D	Valid_PANEL	-	-	SM_PANEL(0)	SS_PANEL(0)	GS_PANEL(0)	REV_PANEL(1)	BGR_PANEL(0
DA	RDID1	3E	module's manufacturer[7:0]							
DB	RDID2	3F	Valid_RDID	LCD module/driver version [6:0]						
DC	RDID3	40	LCD module/driver ID[7:0]							
E0	SETGAMMAR-GC0 (OTPx1)	66	Valid_GAMMA0	-	G1_VRP0[5:0]					
		67	G1_CGMP0[1:0]		G1_VRP1[5:0]					
		68	G1_CGMP1[1:0]		G1_VRP2[5:0]					

Himax Confidential
Do Not Copy

		69	G1_CGMP2[1:0]		G1_VRP3[5:0]	
		6A	G1_CGMP3[1:0]		G1_VRP4[5:0]	
		6B	G1_CGMP5	G1_CGMP4	G1_VRP5[5:0]	
		6C	*	G1_PRP0[6]	-	G1_PKP0[4:0]
		6D	G1_PRP0[5:4]		-	G1_PKP1[4:0]
		6E	G1_PRP0[3:2]		-	G1_PKP2[4:0]
		6F	G1_PRP0[1:0]		-	G1_PKP3[4:0]
		70	-	G1_PRP1[6]	-	G1_PKP4[4:0]
		71	G1_PRP1[5:4]		-	G1_PKP5[4:0]
		72	G1_PRP1[3:2]		-	G1_PKP6[4:0]
		73	G1_PRP1[1:0]		-	G1_PKP7[4:0]
		74			*	G1_PKP8[4:0]
		75	*	*	G1_VRN0[5:0]	
		76	G1_CGMN0[1:0]		G1_VRN1[5:0]	
		77	G1_CGMN1[1:0]		G1_VRN2[5:0]	
		78	G1_CGMN2[1:0]		G1_VRN3[5:0]	
		79	G1_CGMN3[1:0]		G1_VRN4[5:0]	
		7A	G1_CGMN5	G1_CGMN4	G1_VRN5[5:0]	
		7B	*	G1_PRN0[6]	-	G1_PKN0[4:0]
		7C	G1_PRN0[5:4]		-	G1_PKN1[4:0]
		7D	G1_PRN0[3:2]		-	G1_PKN2[4:0]
		7E	G1_PRN0[1:0]		-	G1_PKN3[4:0]
		7F		G1_PRN1[6]	-	G1_PKN4[4:0]
		80	G1_PRN1[5:4]		-	G1_PKN5[4:0]
		81	G1_PRN1[3:2]		-	G1_PKN6[4:0]
		82	G1_PRN1[1:0]		-	G1_PKN7[4:0]
		83			-	G1_PKN8[4:0]
E0	SETGAMMAR-GC1 (OTPx2)	84	Valid__GAMMA1	-	G1_VRP0[5:0]	
		85	G1_CGMP0[1:0]		G1_VRP1[5:0]	
		86	G1_CGMP1[1:0]		G1_VRP2[5:0]	
		87	G1_CGMP2[1:0]		G1_VRP3[5:0]	
		88	G1_CGMP3[1:0]		G1_VRP4[5:0]	
		89	G1_CGMP5	G1_CGMP4	G1_VRP5[5:0]	
		8A	*	G1_PRP0[6]	-	G1_PKP0[4:0]
		8B	G1_PRP0[5:4]		-	G1_PKP1[4:0]
		8C	G1_PRP0[3:2]		-	G1_PKP2[4:0]
		8D	G1_PRP0[1:0]		-	G1_PKP3[4:0]
		8E	-	G1_PRP1[6]	-	G1_PKP4[4:0]
		8F	G1_PRP1[5:4]		-	G1_PKP5[4:0]
		90	G1_PRP1[3:2]		-	G1_PKP6[4:0]
		91	G1_PRP1[1:0]		-	G1_PKP7[4:0]
		92			*	G1_PKP8[4:0]
		93	*	*	G1_VRN0[5:0]	
		94	G1_CGMN0[1:0]		G1_VRN1[5:0]	
		95	G1_CGMN1[1:0]		G1_VRN2[5:0]	
		96	G1_CGMN2[1:0]		G1_VRN3[5:0]	
		97	G1_CGMN3[1:0]		G1_VRN4[5:0]	
		98	G1_CGMN5	G1_CGMN4	G1_VRN5[5:0]	
		99	*	G1_PRN0[6]	-	G1_PKN0[4:0]
		9A	G1_PRN0[5:4]		-	G1_PKN1[4:0]

Himax Confidential
Do Not Copy

This information contained herein is the exclusive property of Himax and shall not be distributed, reproduced, or disclosed in whole or in part without prior written permission of Himax.

		9B	G1_PRN0[3:2]		-	G1_PKN2[4:0]
		9C	G1_PRN0[1:0]		-	G1_PKN3[4:0]
		9D		G1_PRN1[6]	-	G1_PKN4[4:0]
		9E	G1_PRN1[5:4]		-	G1_PKN5[4:0]
		9F	G1_PRN1[3:2]		-	G1_PKN6[4:0]
		A0	G1_PRN1[1:0]		-	G1_PKN7[4:0]
		A1			-	G1_PKN8[4:0]
	SETGAMMAR-GC2 (OTPx3)	A2	Valid__GAMMA2	-	G1_VRP0[5:0]	
		A3	G1_CGMP0[1:0]		G1_VRP1[5:0]	
		A4	G1_CGMP1[1:0]		G1_VRP2[5:0]	
		A5	G1_CGMP2[1:0]		G1_VRP3[5:0]	
		A6	G1_CGMP3[1:0]		G1_VRP4[5:0]	
		A7	G1_CGMP5	G1_CGMP4	G1_VRP5[5:0]	
		A8	*	G1_PRP0[6]	-	G1_PKP0[4:0]
		A9	G1_PRP0[5:4]		-	G1_PKP1[4:0]
		AA	G1_PRP0[3:2]		-	G1_PKP2[4:0]
		AB	G1_PRP0[1:0]		-	G1_PKP3[4:0]
		AC	-	G1_PRP1[6]	-	G1_PKP4[4:0]
		AD	G1_PRP1[5:4]		-	G1_PKP5[4:0]
		AE	G1_PRP1[3:2]		-	G1_PKP6[4:0]
		AF	G1_PRP1[1:0]		-	G1_PKP7[4:0]
E0		B0			*	G1_PKP8[4:0]
		B1	*	*	G1_VRN0[5:0]	
		B2	G1_CGMN0[1:0]		G1_VRN1[5:0]	
		B3	G1_CGMN1[1:0]		G1_VRN2[5:0]	
		B4	G1_CGMN2[1:0]		G1_VRN3[5:0]	
		B5	G1_CGMN3[1:0]		G1_VRN4[5:0]	
		B6	G1_CGMN5	G1_CGMN4	G1_VRN5[5:0]	
		B7	*	G1_PRN0[6]	-	G1_PKN0[4:0]
		B8	G1_PRN0[5:4]		-	G1_PKN1[4:0]
		B9	G1_PRN0[3:2]		-	G1_PKN2[4:0]
		BA	G1_PRN0[1:0]		-	G1_PKN3[4:0]
		BB		G1_PRN1[6]	-	G1_PKN4[4:0]
		BC	G1_PRN1[5:4]		-	G1_PKN5[4:0]
		BD	G1_PRN1[3:2]		-	G1_PKN6[4:0]
		BE	G1_PRN1[1:0]		-	G1_PKN7[4:0]
		BF			-	G1_PKN8[4:0]
E0	SETGAMMAR-GC3 (OTPx4)	C0	Valid__GAMMA3	-	G1_VRP0[5:0]	
		C1	G1_CGMP0[1:0]		G1_VRP1[5:0]	
		C2	G1_CGMP1[1:0]		G1_VRP2[5:0]	
		C3	G1_CGMP2[1:0]		G1_VRP3[5:0]	
		C4	G1_CGMP3[1:0]		G1_VRP4[5:0]	
		C5	G1_CGMP5	G1_CGMP4	G1_VRP5[5:0]	
		C6	*	G1_PRP0[6]	-	G1_PKP0[4:0]
		C7	G1_PRP0[5:4]		-	G1_PKP1[4:0]
		C8	G1_PRP0[3:2]		-	G1_PKP2[4:0]
		C9	G1_PRP0[1:0]		-	G1_PKP3[4:0]
		CA	-	G1_PRP1[6]	-	G1_PKP4[4:0]
		CB	G1_PRP1[5:4]		-	G1_PKP5[4:0]

Himax Confidential
Do Not Copy

	CC	G1_PRP1[3:2]		-	G1_PKP6[4:0]
	CD	G1_PRP1[1:0]		-	G1_PKP7[4:0]
	CE			*	G1_PKP8[4:0]
	CF	*	*	G1_VRN0[5:0]	
	D0	G1_CGMN0[1:0]		G1_VRN1[5:0]	
	D1	G1_CGMN1[1:0]		G1_VRN2[5:0]	
	D2	G1_CGMN2[1:0]		G1_VRN3[5:0]	
	D3	G1_CGMN3[1:0]		G1_VRN4[5:0]	
	D4	G1_CGMN5	G1_CGMN4	G1_VRN5[5:0]	
	D5	*	G1_PRN0[6]	-	G1_PKN0[4:0]
	D6	G1_PRN0[5:4]		-	G1_PKN1[4:0]
	D7	G1_PRN0[3:2]		-	G1_PKN2[4:0]
	D8	G1_PRN0[1:0]		-	G1_PKN3[4:0]
	D9		G1_PRN1[6]	-	G1_PKN4[4:0]
	DA	G1_PRN1[5:4]		-	G1_PKN5[4:0]
	DB	G1_PRN1[3:2]		-	G1_PKN6[4:0]
	DC	G1_PRN1[1:0]		-	G1_PKN7[4:0]
	DD			-	G1_PKN8[4:0]

Table 10.1 OTP table

Note 1: The default value of OTP memory bits are all "1".

Note 2: VALID_xxx bit decide the OPT reload Enable/Disable, the default value is "1". If the own OTP area of VALID_xxx bit had been programmed, the VALID_xxx bit will be changed to "0" automatically and execute the OTP reload.

For example:

Condition 1: Programmed all index of 0x0Ah ~ 0x14h and Valid_POWER bit

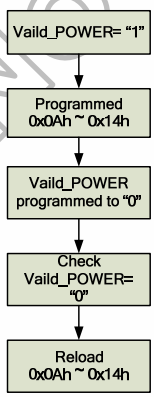

Condition 2: Do not program all index of 0x0Ah ~ 0x14h and Valid_POWER bit

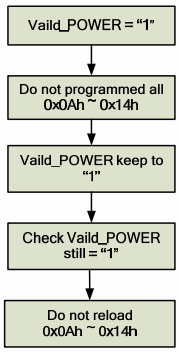

Note 3: There are some conditions that HX83xx-A can reload OTP.

Himax Confidential
Do Not Copy

This information contained herein is the exclusive property of Himax and shall not be distributed, reproduced, or disclosed in whole or in part without prior written permission of Himax.

a. Hardware reset
b. Software reset
c. SLPOUT command.

Himax Confidential
Do Not Copy

This information contained herein is the exclusive property of Himax and shall not be distributed, reproduced, or disclosed in whole or in part without prior written permission of Himax.

10.2 OTP programming flow

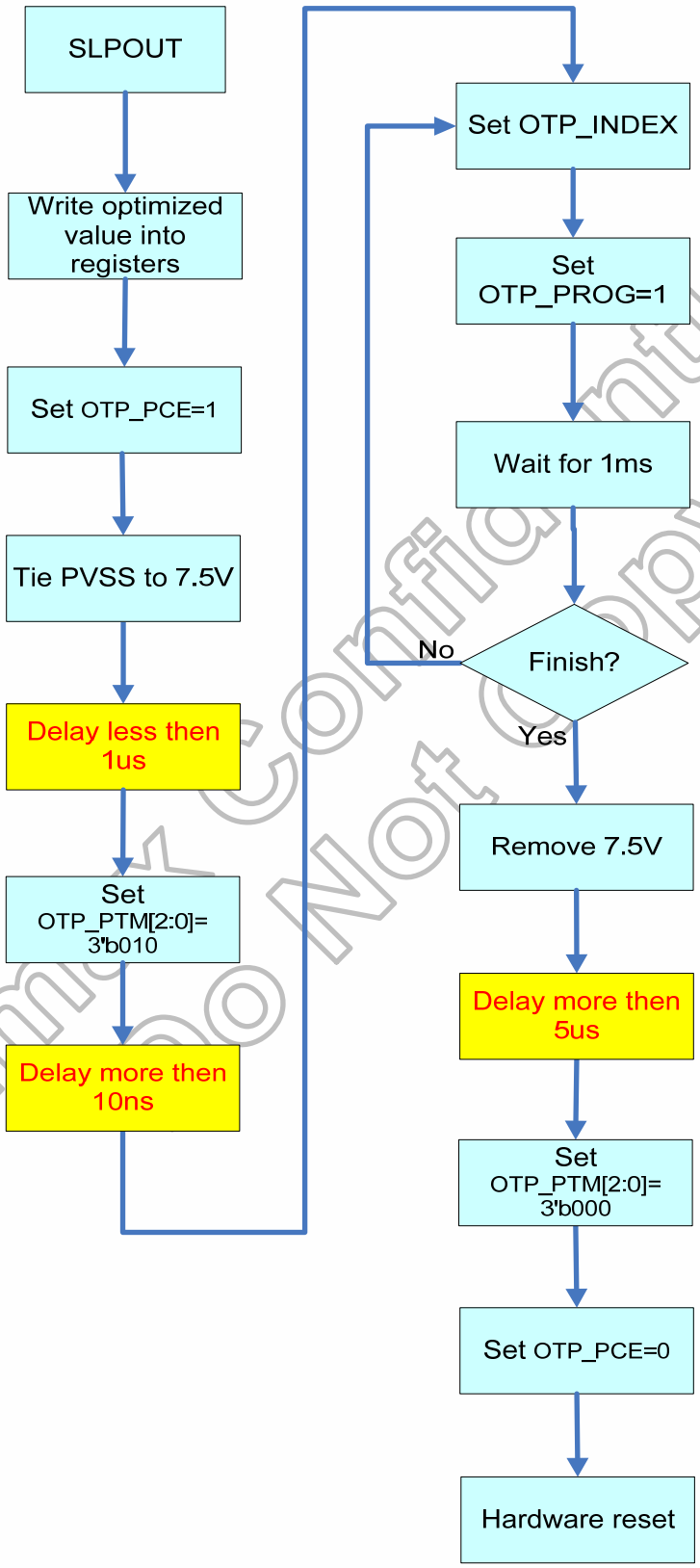

Note: The input voltage (7.5V) should be removed from PVSS after OTP programming finished.

Figure 10. 1 OTP Programming Sequence

Himax Confidential
Do Not Copy

10.3 Programming sequence

<table>
<tr><th>Step</th><th>Operation</th></tr>
<tr><td>1</td><td>Power on and reset the module then SLPOUT</td></tr>
<tr><td>2</td><td>Write optimized value to related register
<table>
<tr><th>Command</th><th>Register</th><th>Description</th></tr>
<tr><td>SETPOWER</td><td>B1h</td><td>Set power related setting</td></tr>
<tr><td>SETRGBIF</td><td>B3h</td><td>Set RGB interface related register</td></tr>
<tr><td>SETCYC</td><td>B4h</td><td>Set Display Waveform Cycle</td></tr>
<tr><td>SETVCOM</td><td>B6h</td><td>Set VCOM Voltage</td></tr>
<tr><td>SETDGCLUT</td><td>C1h (DGC_EN)</td><td>Set DGC LUT</td></tr>
<tr><td>SETDDB</td><td>C4h</td><td>Set DDB</td></tr>
<tr><td>SETPANEL</td><td>CCh (SM_PANEL, SS_PANEL, GS_PANEL, REV_PANEL, GBR_PANEL)</td><td>Set panel related register</td></tr>
<tr><td>SETID</td><td>C3h</td><td>SET ID</td></tr>
<tr><td>SETGAMMA</td><td>E0h</td><td>Set Gamma Curve Related Setting</td></tr>
</table></td></tr>
<tr><td>3</td><td>Set OTP_PCE=1</td></tr>
<tr><td>4</td><td>Connect external power 7.5V to VPP pin</td></tr>
<tr><td>5</td><td>Wait 100ms for VPP stable</td></tr>
<tr><td>6</td><td>Set OTP_PTM[2:0]=3’b010</td></tr>
<tr><td>7</td><td>Specify OTP_index (note 1, 3)
<table>
<tr><th>OTP_index (Write – For Program)</th><th>OTP_index (Read – For get OTP value)</th><th>Parameter</th></tr>
<tr><td>0Ah ~ 14h</td><td>0Ah ~ 14h</td><td>SETPOWER value</td></tr>
<tr><td>1Ah</td><td>1Ah</td><td>DPL, HSPL, VSPL, EPL</td></tr>
<tr><td>1Bh ~ 25h</td><td>1Bh ~ 25h</td><td>SETCYC value</td></tr>
<tr><td>26h</td><td>26h</td><td>VCMC0[7:0]</td></tr>
<tr><td>26h</td><td>27h</td><td>VCMC1[7:0]</td></tr>
<tr><td>26h</td><td>28h</td><td>VCMC2[7:0]</td></tr>
<tr><td>2Ch</td><td>2Ch</td><td>DGC_EN</td></tr>
<tr><td>2Dh ~ 30h</td><td>2Dh ~ 30h</td><td>DDB1~4[7:0]</td></tr>
<tr><td>2Dh ~ 30h</td><td>31h ~ 34h</td><td>DDB1~4[7:0]</td></tr>
<tr><td>2Dh ~ 30h</td><td>35h ~ 38h</td><td>DDB1~4[7:0]</td></tr>
<tr><td>3Dh</td><td>3Dh</td><td>SM_PANEL, SS_PANEL, GS_PANEL, REV_PANEL, GBR_PANEL</td></tr>
<tr><td>3Eh</td><td>3Eh</td><td>module’s manufacturer[7:0]</td></tr>
<tr><td>3Fh</td><td>3Fh</td><td>LCD module/driver version [6:0]</td></tr>
<tr><td>40h</td><td>40h</td><td>LCD module/driver ID[7:0]</td></tr>
<tr><td>66h ~ DDh</td><td>66h ~ DDh</td><td>SETGAMMAR value</td></tr>
</table></td></tr>
<tr><td>8</td><td>Set OTP_Mask=0x00h, programming the entire bit of one parameter.</td></tr>
<tr><td>9</td><td>Set OTP_PROG=1, Internal register begin write to OTP according to OTP_index.</td></tr>
<tr><td>10</td><td>Wait 1 ms (note 2, 4)</td></tr>
<tr><td>11</td><td>Complete programming one parameter to OTP. If continue to programming other parameter, return to step (7). Otherwise, remove the external power from PVSS pin.</td></tr>
<tr><td>12</td><td>Set OTP_PTM[2:0]=3’b000</td></tr>
<tr><td>13</td><td>Set OTP_PCE=0</td></tr>
<tr><td>14</td><td>Hardware reset</td></tr>
</table>

Note 1: When do the OTP program on gamma setting (GC0: 66h~83h, GC1: 84h~A1h, GC2:

Himax Confidential Do Not Copy

This information contained herein is the exclusive property of Himax and shall not be distributed, reproduced, or disclosed in whole or in part without prior written permission of Himax.

A2h~BFh, GC3: C0h~DDh), user just specify the 66h, the all settings of GC0 will be programmed. Similarly the same condition is also on programming GC1, GC2 and GC3. (GC1: 84h, GC2: A2h, GC3: C0h).

Note 2: When do the OTP program on gamma setting, it must wait 6ms delay time after setting OTP_PROG=1.

Note 3: When do the OTP program on DDB setting (SETDDB-0: 2Dh~30h, SETDDB-1: 31h~34h, SETDDB-2: 35h~38h), user just specify the 2Dh, the all settings of DDB will be programmed to SETDDB-0, SETDDB-1 and SETDDB-2 automatically.

Note 4: When do the OTP program on DDB setting, it must wait 2ms delay time after setting OTP_PROG=1.

10.4 OTP Programming Circuitry

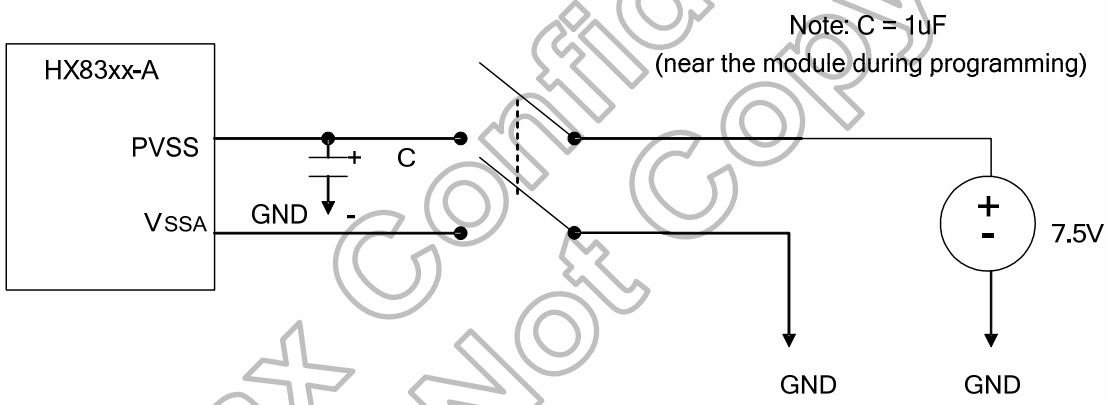

Figure 10.1 OTP Programming Circuitry

Himax Confidential
Do Not Copy

This information contained herein is the exclusive property of Himax and shall not be distributed, reproduced, or disclosed in whole or in part without prior written permission of Himax.

11. Ordering Information

Part No.	Package
HX83xx-A000 PDxxx	PD: mean COG xxx: mean chip thickness (μm), (default: 250 μm)

12. Revision History

Version	Date	Description of Changes
01	2009/01/12	New setup
	2009/01/23	1. Modify the description for 3.4.1 Bump Arrangement (page 27 and page 28) 2. Modify the description for 6.2.40 Set DGC LUT (C1h) (page 179) 3. Modify the description for 6.2.43 SETPANEL (CCh) (page 183 and page 184) 4. Modify the Figure 7.1 Power supply with PFM circuit (page 189) 5. Modify the description for 10.1 OTP table (page 201)
	2009/02/04	1. Modify the Figure 5.8 DC/DC Converter Circuit (PFM) (page 98) 2. Modify the description for 6.2.43 SETPANEL (CCh) (page 184) 3. Modify the Figure 7.1 Power supply with PFM circuit (page 189) 4. Modify the Table 7.2 Adoptability of Component (page 190) 5. Modify the Figure 9.1 Layout Recommendation (page 199) 6. Change the “REGVDD” pin to “DUMMY” pin (page 12, page 15, page 17, page 199, page 200)
	2009/02/10	1. Modify the description for 6.2.34 Set Power (B1h) (page 155) 2. Modify the description for 8.4 AC Characteristics (page 194 ~ page 199)
	2009/02/12	1. Modify the Table 8.6 Horizontal Timings for RGB I/F (page 196 ~ page 197)

Himax Confidential
Do Not Copy

This information contained herein is the exclusive property of Himax and shall not be distributed, reproduced, or disclosed in whole or in part without prior written permission of Himax.