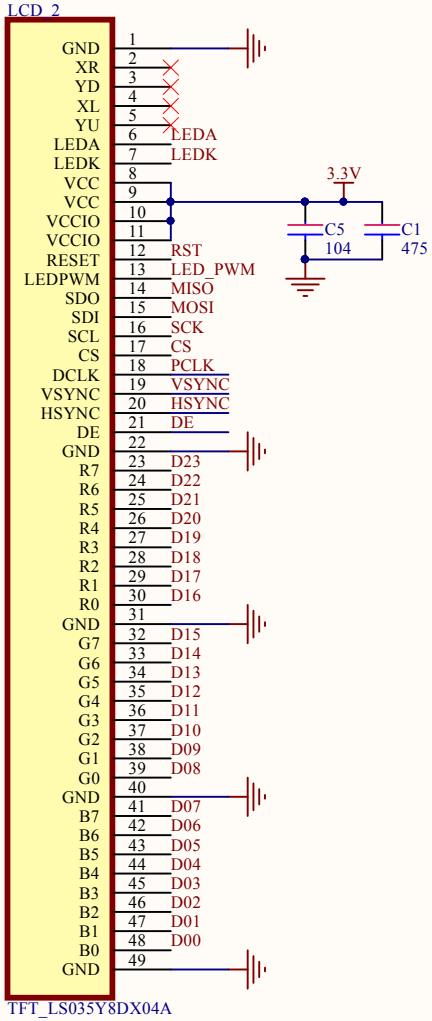

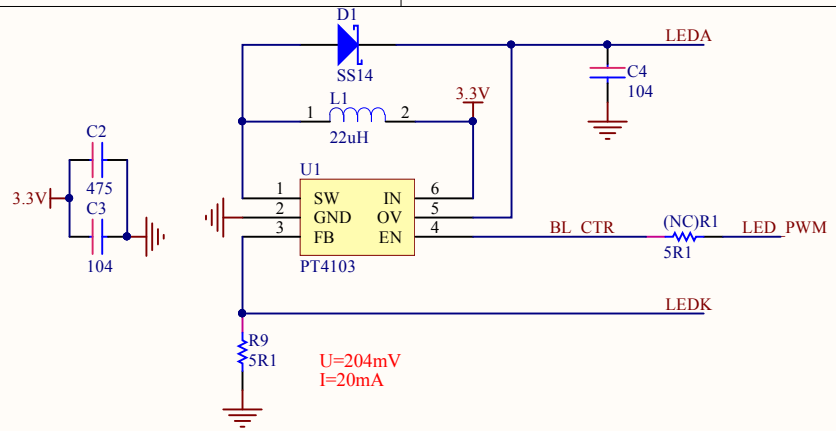

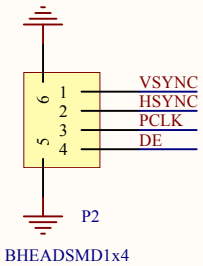

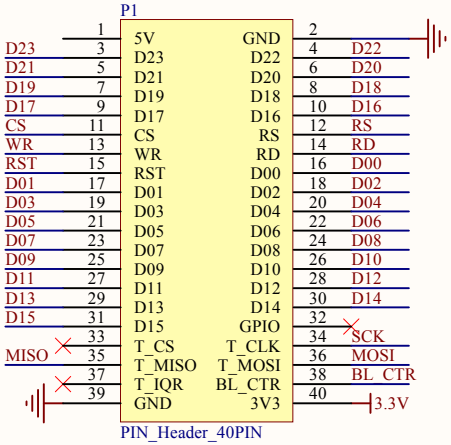
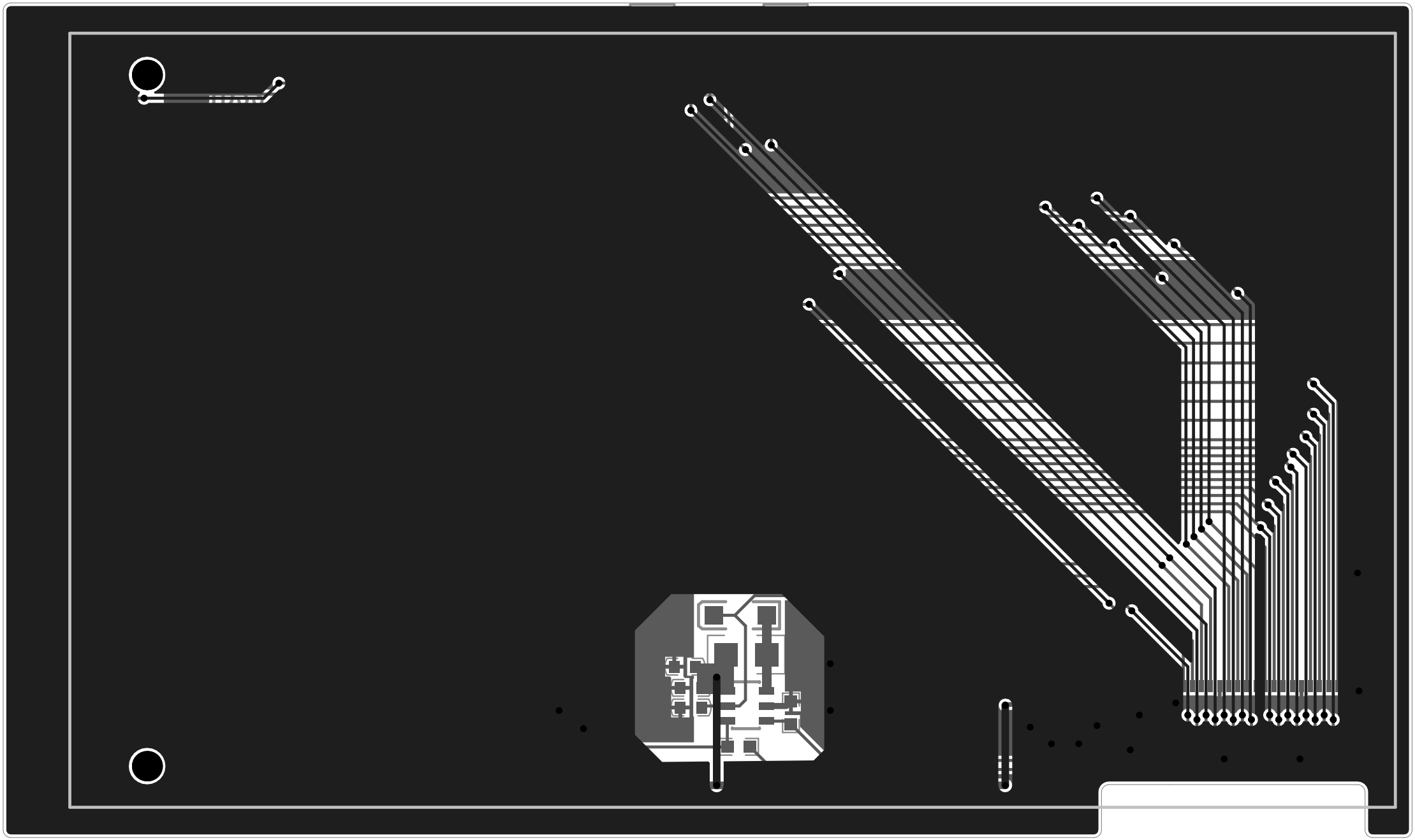
Title		
Size A4	Number	Revision
Date: 2017-03-04		Sheet of
File: D:\Tiky hardware design\..\3.5寸高端RGB屏.SchDoc		Drawn By: