Ecological and Energy Engineering

Project Work Introduction

February 18th, 2026

Michael Wild, wimm@zhaw.ch

Summary

You're going to be working with mostly unprocessed data gathered at our Totalp measurement site. Five main sub-parts:

1. Clean dataset where necessary, combine different sources.
2. Do basic visualizations and exploratory data analysis. Identify gaps in measurement data and obvious errors.
3. Add supplementary data, such as sun position, shading fraction etc.
4. Try and construct a model for the output of a single module, validate if possible.
5. Use either model or experimental data to produce performance maps.

Technicalities

- Our own data analysis was performed in R. I will give you the source data both as Rdata and CSV, but support for any other languages is limited!
- The project work will be conducted in groups of 2-3 people. I would suggest using git for cooperation.
- The tasks will be similar for all groups, only at the end there will be different analysis questions to focus on.
- The project work will develop dynamically, also depending on your progress. In the first week, we will work with data of a single day, but this will increase quickly!
- In week 5 there will be project presentations (10 + 10 Minutes each). A written report **must be handed in by 24.03.2026, 17:00**.

Totalp Measurement Site

High-Alpine Photovoltaic Test Site
46.8379° N, 9.8131° E, 2486 m. asl.
Below the Weissfluhjoch peak.

ZHAW Research since 2017, in cooperation with SLF and EKZ.

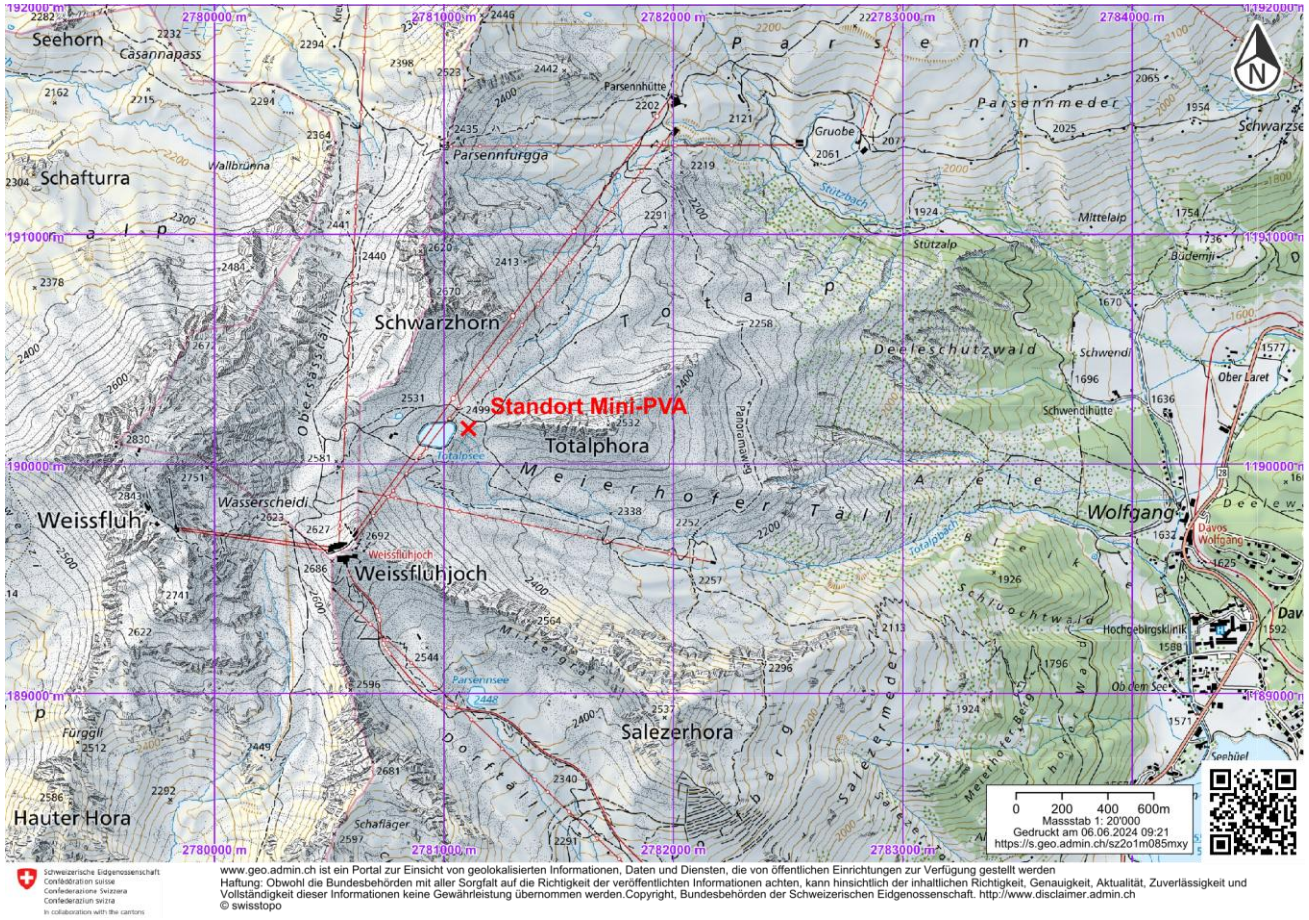

Totalp Measurement Site

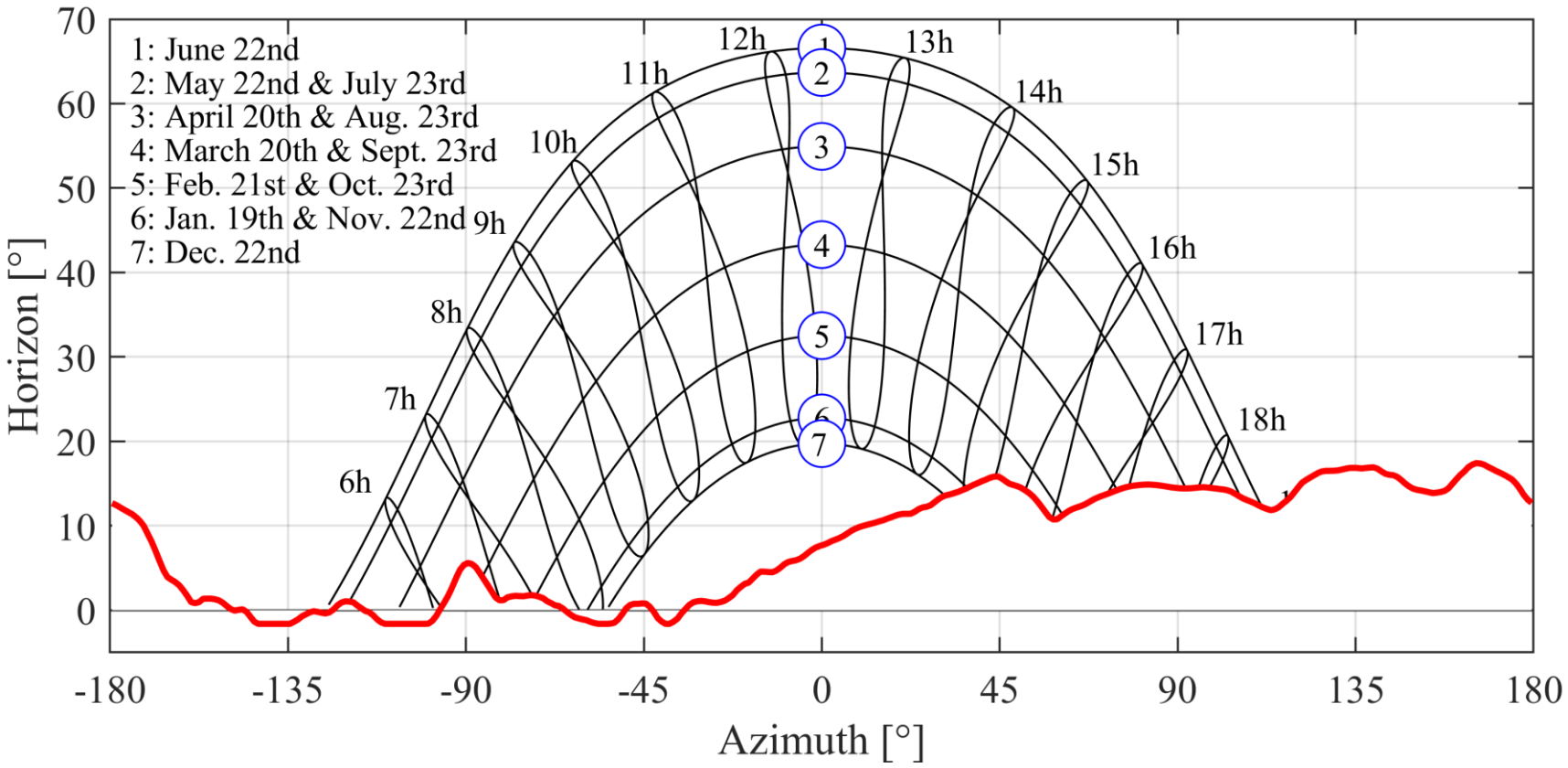

Totalp – Full Scale PV Experiment

- In operation since 2017.
- Consists (originally) of 6 different groups of 3-4 mono- and bifacial PV panels at different inclinations.
- Oriented towards south.
- Also encompasses a multitude of irradiation measurements in different planes as well as an Albedo measurement.

- Project Website

Totalp – Miniature PV Experiment (Version 1)

Multi-row systems behave differently!
What influence does the row spacing have?
What is the influence of the ground slope?

Full-scale parameter sweep is basically impossible

→ Build miniaturized version that can automatically and quickly switch between these configurations

→ Instead of 80 different plants, have 1 plant that cycles through the configurations.

Totalp – Miniature PV Experiment

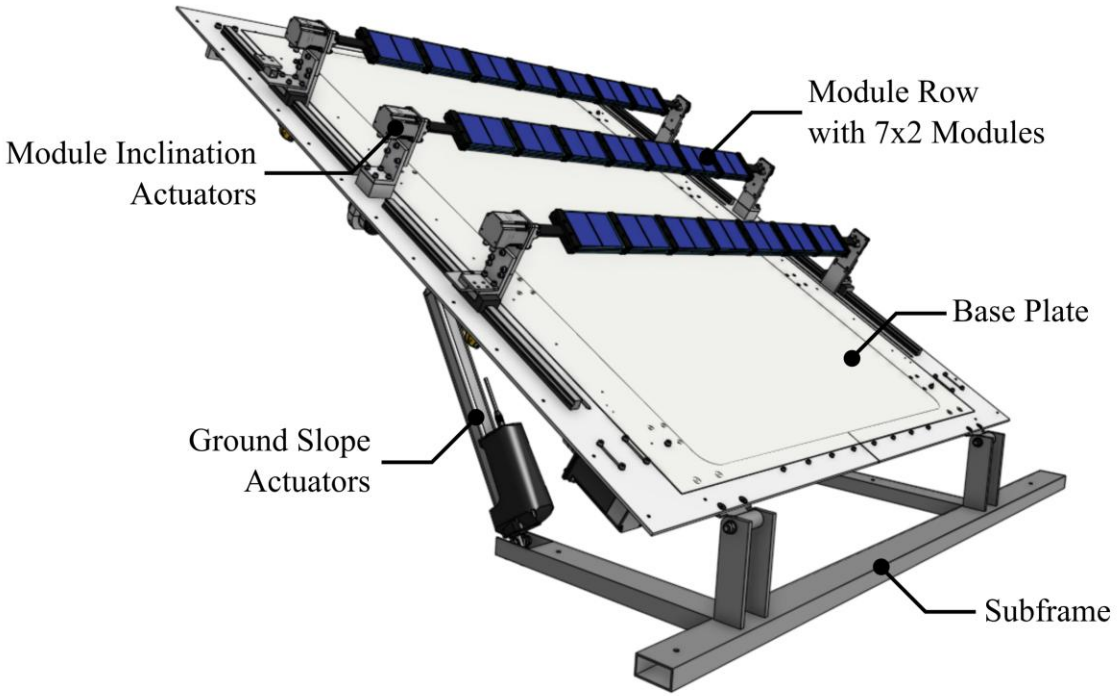

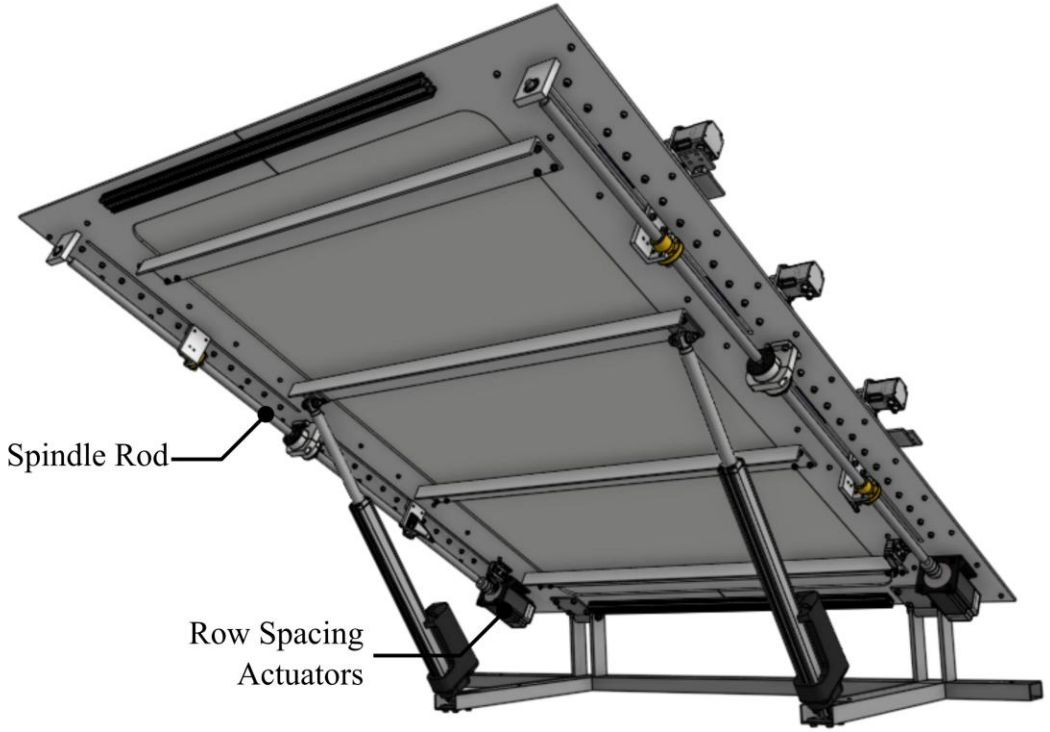

Totalp – Measurement Channels

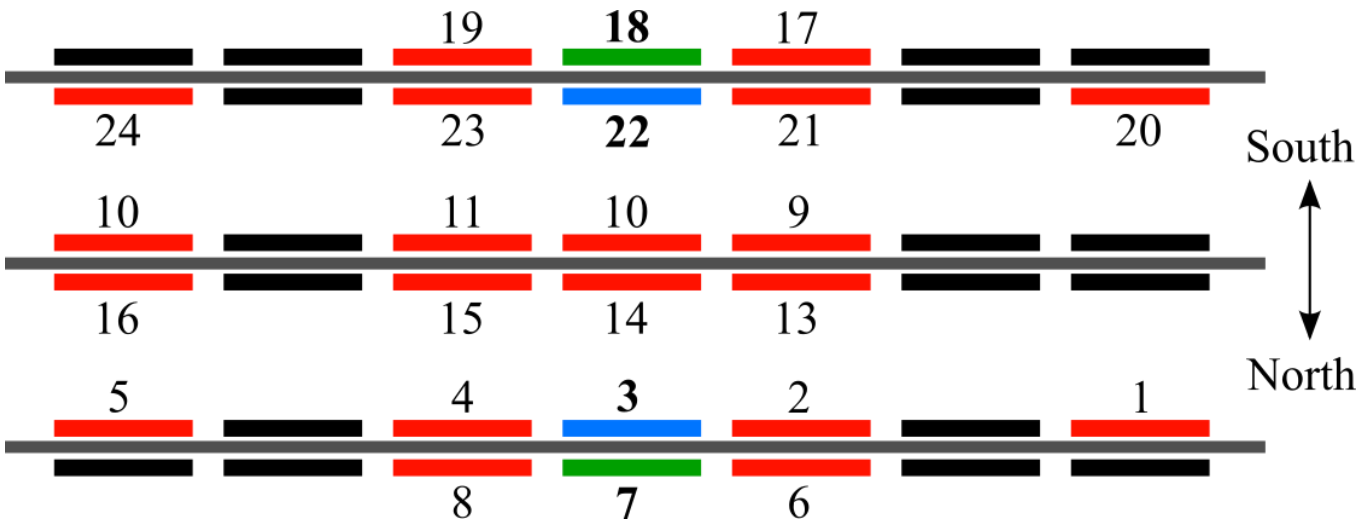

STC_Power_mW	Channel
2643.350	1
2628.910	2
2627.800	3
2656.540	4
2672.560	5
2585.380	6
2659.460	7
2651.330	8
2644.490	9
2563.000	10
2625.620	11
2690.900	12
2668.950	13
2673.340	14
2584.920	15
2662.704	16
2680.480	17

STC_Powers.RData

Mini-PVA Data

	ID.Results	mes_date	ID.Modul	channel	U0	Ik	Pmpp	FF	Ghor	Tluft	RA	MN	HN	Res	mes_time
1	2912013	10/1/2024 12:00:29 AM	2	3	0.000	0.0000000	0.0000e+00	NaN	-30003000	15.1°C	700	90	0	1	1
2	2912014	10/1/2024 12:01:29 AM	2	3	0.000	0.0000000	0.0000e+00	NaN	-30003000	15.1°C	115	0	0	1	1
3	2912015	10/1/2024 12:15:29 AM	2	3	0.000	0.0000000	0.0000e+00	NaN	-30003000	15°C	700	90	0	1	1
4	2912016	10/1/2024 12:16:29 AM	2	3	0.000	0.0000000	0.0000e+00	NaN	-30003000	15°C	115	0	0	1	1
5	2912017	10/1/2024 12:30:29 AM	2	3	0.000	0.0000000	0.0000e+00	NaN	-30003000	14.8°C	700	90	0	1	1
6	2912018	10/1/2024 12:31:29 AM	2	3	0.121	0.0000071	1.5250e-07	18	-30003000	14.8°C	115	0	0	1	2
7	2912019	10/1/2024 12:45:29 AM	2	3	0.000	0.0000000	0.0000e+00	NaN	-30003000	14.8°C	700	90	0	1	1
8	2912020	10/1/2024 12:46:29 AM	2	3	0.121	0.0000064	1.5250e-07	20	-30003000	14.8°C	115	0	0	1	1
9	2912021	10/1/2024 1:00:29 AM	2	3	0.000	0.0000000	0.0000e+00	NaN	-30003000	14.7°C	700	90	0	1	1
10	2912022	10/1/2024 1:01:29 AM	2	3	0.000	0.0000000	0.0000e+00	NaN	-30003000	14.7°C	115	0	0	1	1
11	2912023	10/1/2024 1:15:29 AM	2	3	0.000	0.0000000	0.0000e+00	NaN	-30003000	14.6°C	700	90	0	1	1
12	2912024	10/1/2024 1:16:29 AM	2	3	0.000	0.0000000	0.0000e+00	NaN	-30003000	14.6°C	115	0	0	1	1
13	2912025	10/1/2024 1:30:29 AM	2	3	0.000	0.0000000	0.0000e+00	NaN	-30003000	14.4°C	700	90	0	1	1
14	2912026	10/1/2024 1:31:29 AM	2	3	0.000	0.0000000	0.0000e+00	NaN	-30003000	14.5°C	115	0	0	1	1
15	2912027	10/1/2024 1:45:29 AM	2	3	0.394	0.0000392	4.6852e-06	30	-30003000	14.4°C	700	90	0	1	2
16	2912028	10/1/2024 1:46:29 AM	2	3	0.121	0.0000067	1.5250e-07	19	-30003000	14.4°C	115	0	0	1	1
17	2912029	10/1/2024 2:00:29 AM	2	3	0.000	0.0000000	0.0000e+00	NaN	-30003000	14.3°C	700	90	0	1	1
18	2912030	10/1/2024 2:01:29 AM	2	3	0.000	0.0000000	0.0000e+00	NaN	-30003000	14.3°C	115	0	0	1	1

minipva_measurementdata_singleday.RData

Mini-PVA Data

Raw Measurement Values

Raw measurement values are **unaltered** measurement values directly obtained from the Mini-PVA. Crucially, the measurement timestamp corresponds exactly to the measurement. These raw measurement values are:

- `mes_date` : Timestamp (POSIXct)
- `channel` : Channel (Module) of Mini-PVA (int/chr). See module numbers.
- `U0` : Open-Circuit Voltage of Mini-Module (V).
- `Ik` : Short-Circuit Current of Mini-Module (mA).
- `Pmpp` : MPP-Power of Mini-Module (mW).
- `RA` : Row Spacing (absolute) (mm).
- `MN` : Module Angle (absolute) (°).
- `HN` : Ground Slope (°).
- `Res` : Measurement Validity (?).
- `mes_time` : Measurement Duration (s).

Large Installation Data

Timestamp	Pcorr A	Pnorm A	Pcorr B	Pnorm B	Pcorr C	Pnorm C	Pcorr D	Pnorm D	Pcorr E	Pnorm E	Pcorr F	Pnorm F	TModuleMean
2024-10-01 13:49:10	69.43572	0.2461809	65.93713	0.2326933	61.91844	0.2181856	82.88661	0.2886668	76.14170	0.2667484	48.59196	0.1713528	12.45308
2024-10-01 13:49:20	70.38728	0.2495550	66.87625	0.2360079	62.73874	0.2210762	83.86449	0.2920722	76.78065	0.2689868	49.07485	0.1730564	12.43692
2024-10-01 13:49:30	71.41566	0.2532009	67.74576	0.2390753	63.56107	0.2239746	84.92575	0.2957689	77.74445	0.2723632	49.63673	0.1750362	12.42000
2024-10-01 13:49:40	72.16425	0.2558550	68.43226	0.2414968	64.24822	0.2263947	85.85736	0.2990128	78.56130	0.2752249	50.26168	0.1772410	12.40077
2024-10-01 13:49:50	73.09642	0.2591598	69.33446	0.2446822	65.05740	0.2292469	86.80391	0.3023097	79.47341	0.2784203	50.86972	0.1793856	12.38923
2024-10-01 13:50:00	73.82831	0.2617544	70.10773	0.2474109	65.76913	0.2317550	87.71385	0.3054788	80.40468	0.2816829	51.50383	0.1816213	12.38231
2024-10-01 13:50:10	74.59771	0.2644825	70.83250	0.2499698	66.50396	0.2343444	88.63383	0.3086825	81.23767	0.2846010	52.11365	0.1837714	12.37231
2024-10-01 13:50:20	75.46028	0.2675407	71.76605	0.2532636	67.30820	0.2371794	89.76211	0.3126122	82.21854	0.2880373	52.76361	0.1860631	12.36000
2024-10-01 13:50:30	76.67479	0.2718468	72.87302	0.2571698	68.45945	0.2412352	91.02122	0.3169972	83.11372	0.2911734	53.50148	0.1886649	12.34308
2024-10-01 13:50:40	77.85505	0.2760314	74.07027	0.2613951	69.48164	0.2448371	92.36898	0.3216913	84.07538	0.2945424	54.19399	0.1911078	12.32615
2024-10-01 13:50:50	78.79990	0.2793814	74.85740	0.2641741	70.12506	0.2471044	93.19153	0.3245559	84.62683	0.2964743	54.44754	0.1920016	12.31000
2024-10-01 13:51:00	79.21138	0.2808403	75.20201	0.2653895	70.26063	0.2475829	93.56661	0.3258621	84.99396	0.2977604	54.55234	0.1923714	12.29769
2024-10-01 13:51:10	79.57400	0.2821256	75.57615	0.2667095	70.57519	0.2486906	93.91608	0.3270794	85.38819	0.2991415	54.85167	0.1934265	12.28846
2024-10-01 13:51:20	80.18237	0.2842827	76.06919	0.2684495	71.16332	0.2507637	94.68051	0.3297414	86.09884	0.3016312	55.23042	0.1947627	12.28231
2024-10-01 13:51:30	80.90627	0.2868492	76.81198	0.2710708	71.88743	0.2533150	95.56667	0.3328273	86.85441	0.3042782	55.86449	0.1969980	12.28154
2024-10-01 13:51:40	81.86448	0.2902467	77.76282	0.2744261	72.76725	0.2564154	96.57654	0.3363452	87.78755	0.3075472	56.48989	0.1992034	12.28538
2024-10-01 13:51:50	82.74827	0.2933796	78.62133	0.2774557	73.61102	0.2593884	97.54346	0.3397125	88.65219	0.3105763	57.07403	0.2012627	12.29538

largeInstallation_measurementdata_singleday.RData

Environmental Data

Timestamp	GHI	DNI	Zenith	AirTemperature
2024-10-01 07:46:10	29.69	0.00	3.0	3.5
2024-10-01 07:46:20	29.66	0.00	3.0	3.5
2024-10-01 07:46:30	30.62	0.00	3.1	3.5
2024-10-01 07:46:40	34.42	0.60	3.1	3.5
2024-10-01 07:46:50	28.55	0.00	3.1	3.5
2024-10-01 07:47:00	28.65	0.00	3.1	3.5
2024-10-01 07:47:10	35.34	0.00	3.2	3.5
2024-10-01 07:47:20	28.85	0.00	3.2	3.4
2024-10-01 07:47:30	38.49	0.00	3.2	3.5
2024-10-01 07:47:40	33.67	0.00	3.3	3.5
2024-10-01 07:47:50	31.57	0.00	3.3	3.4
2024-10-01 07:48:00	30.22	0.00	3.3	3.4
2024-10-01 07:48:10	30.68	0.00	3.3	3.5
2024-10-01 07:48:20	35.86	0.00	3.4	3.5
2024-10-01 07:48:30	30.35	0.00	3.4	3.5
2024-10-01 07:48:40	28.55	0.00	3.4	3.5
2024-10-01 07:48:50	32.32	0.00	3.5	3.5
2024-10-01 07:49:00	27.11	0.00	3.5	3.5

environmentaldata_singleday.RData

Tasks Week 1

- Write code to read in each data file. If necessary, apply transformations (such as string «15.1°C» to float «15.1»).
- Normalize the MPP-Power values in the Mini-PVA data file («Pmpp») with the STC-Power values found in the «STC_Powers» file. Use the common channel identifier as key.

  $P_{nominal} = \frac{P_{MPP}}{P_{STC}}$ ← Measurements of different modules are comparable
- Combine the three core datasets for the single given day (Mini-PVA, large installation, environmental data). Timestamps: We are interested in the mini-PVA measurements, use interpolation where necessary.
- Explore the dataset: Filter for certain channels, array configurations. Visualize the measurements over a day, compare to the corresponding module of the large installation where applicable.