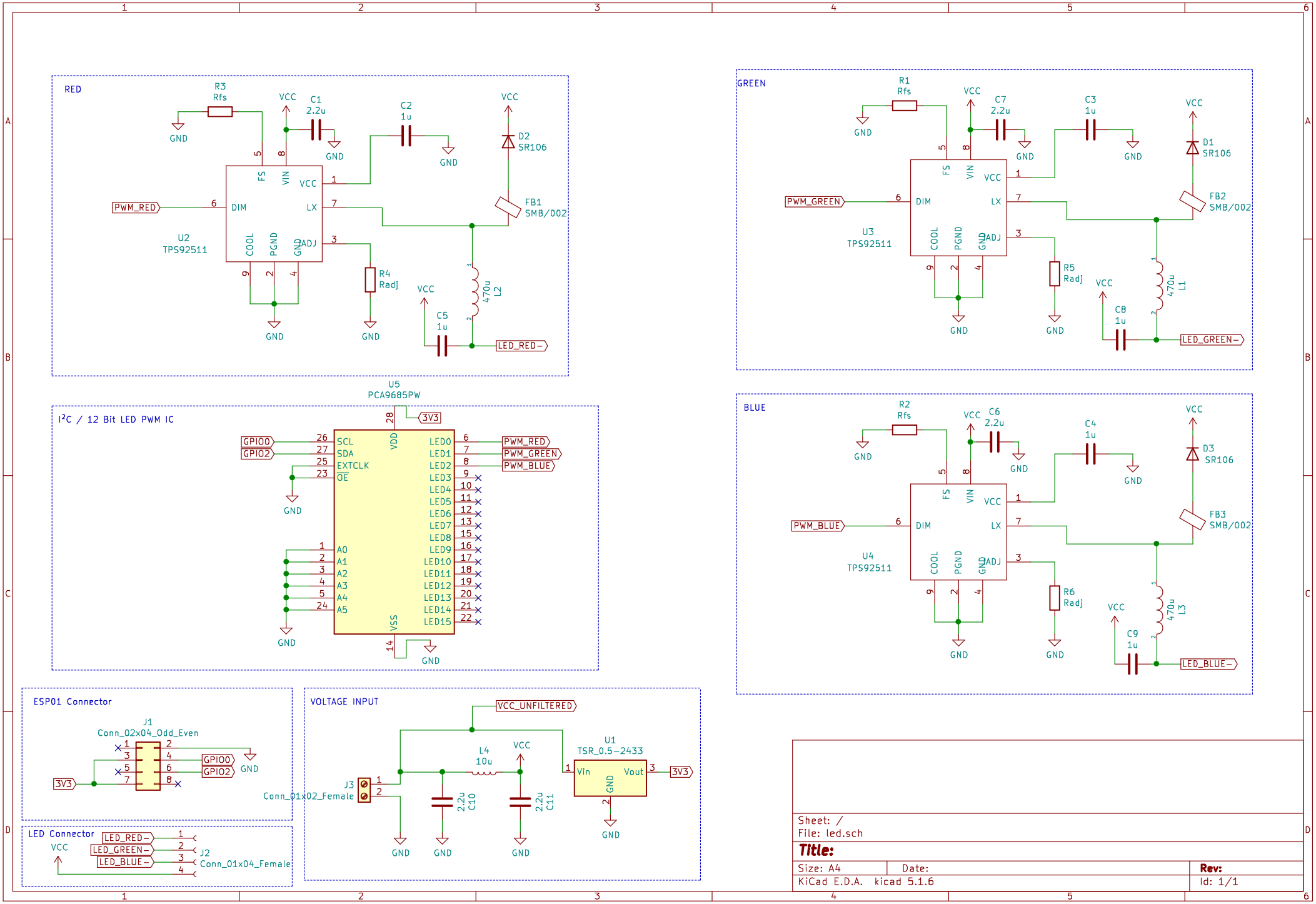
RED
R3
Rfs
VCC
C1
2.2u
C2
1u
VCC
D2
SR106
FB1
SMB/002
PWM_RED
U2
TPS92511
DIM
FS
VIN
VCC
LX
COOL
PGND
GND
ADJ
R4
Radj
470u
L2
C5
1u
LED_RED−
GND
GREEN
R1
Rfs
C7
2.2u
C3
1u
D1
SR106
FB2
SMB/002
PWM_GREEN
U3
TPS92511
R5
Radj
470u
L1
C8
1u
LED_GREEN−
BLUE
R2
Rfs
C6
2.2u
C4
1u
D3
SR106
FB3
SMB/002
PWM_BLUE
U4
TPS92511
R6
Radj
470u
L3
C9
1u
LED_BLUE−
U5
PCA9685PW
I²C / 12 Bit LED PWM IC
3V3
GPIO0
GPIO2
SCL
SDA
EXTCLK
OE
VDD
VSS
A0
A1
A2
A3
A4
A5
LED0
LED1
LED2
LED3
LED4
LED5
LED6
LED7
LED8
LED9
LED10
LED11
LED12
LED13
LED14
LED15
ESP01 Connector
J1
Conn_02x04_Odd_Even
LED Connector
J2
Conn_01x04_Female
VOLTAGE INPUT
VCC_UNFILTERED
L4
10u
2.2u
C10
C11
J3
Conn_01x02_Female
U1
TSR_0.5−2433
Vin
Vout
Sheet: /
File: led.sch
Title:
Size: A4
Date:
Rev:
KiCad E.D.A. kicad 5.1.6
Id: 1/1