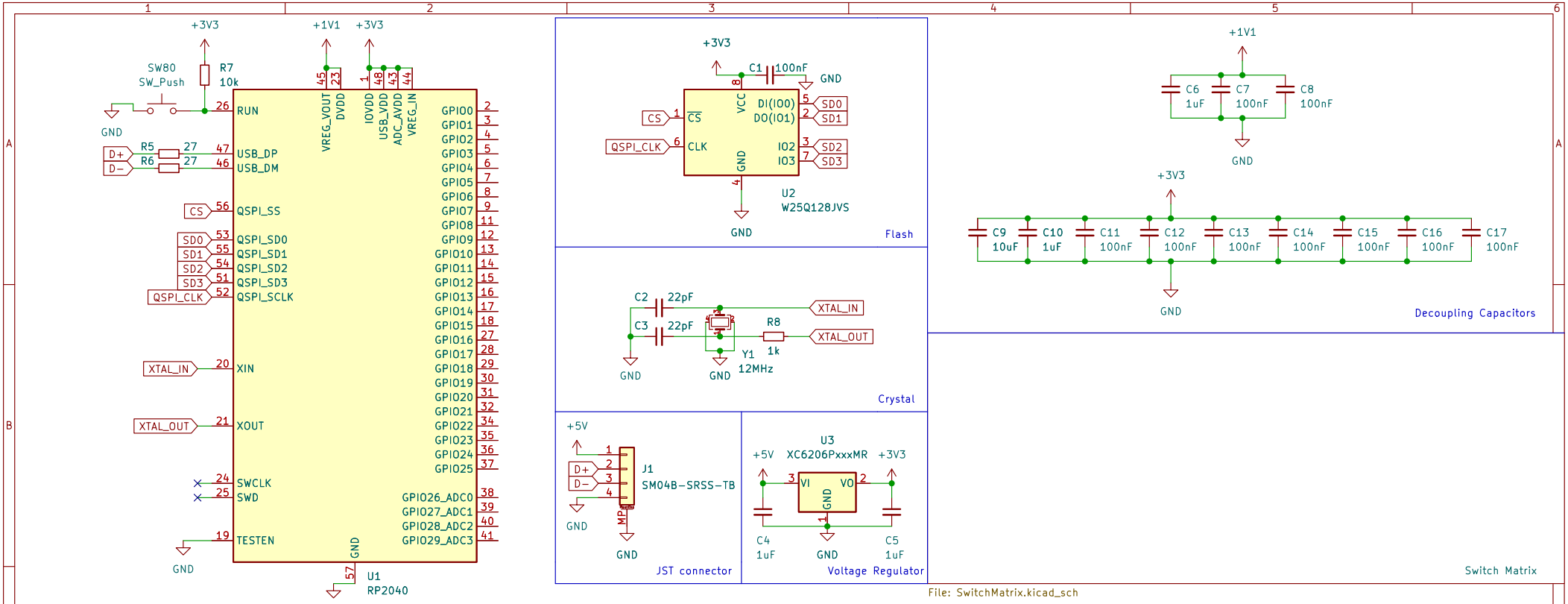

File: SwitchMatrix.kicad_sch

Sheet: /
File: rp2040-bakeneko65.kicad_sch

Title:

Size: A4	Date:	**Rev:**
KiCad E.D.A. kicad (6.0.9)		Id: 1/2

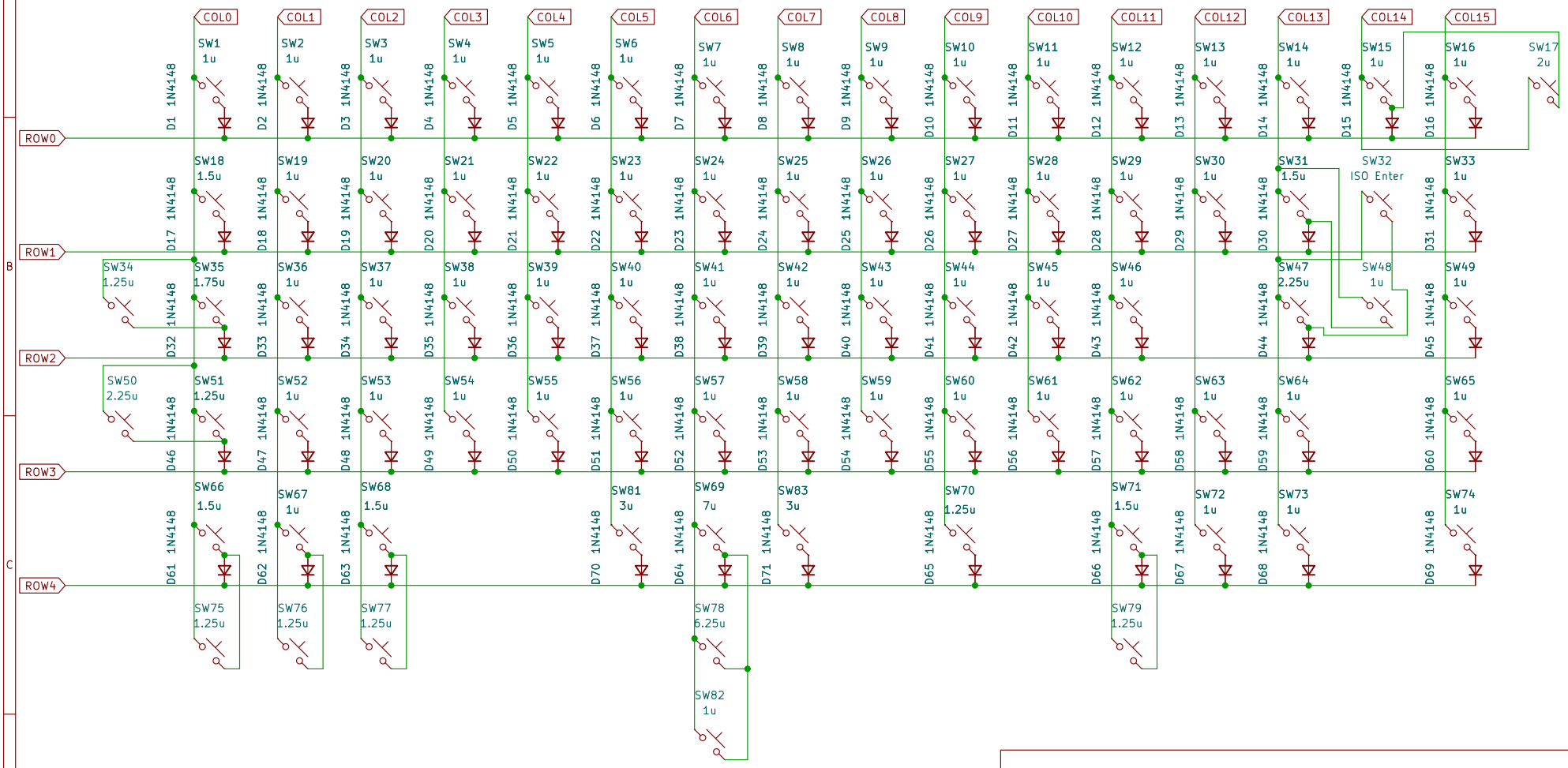

Sheet: /Switch Matrix/
File: SwitchMatrix.kicad_sch

Title:

Size: A4	Date:	**Rev:**
KiCad E.D.A. kicad (6.0.9)		Id: 2/2