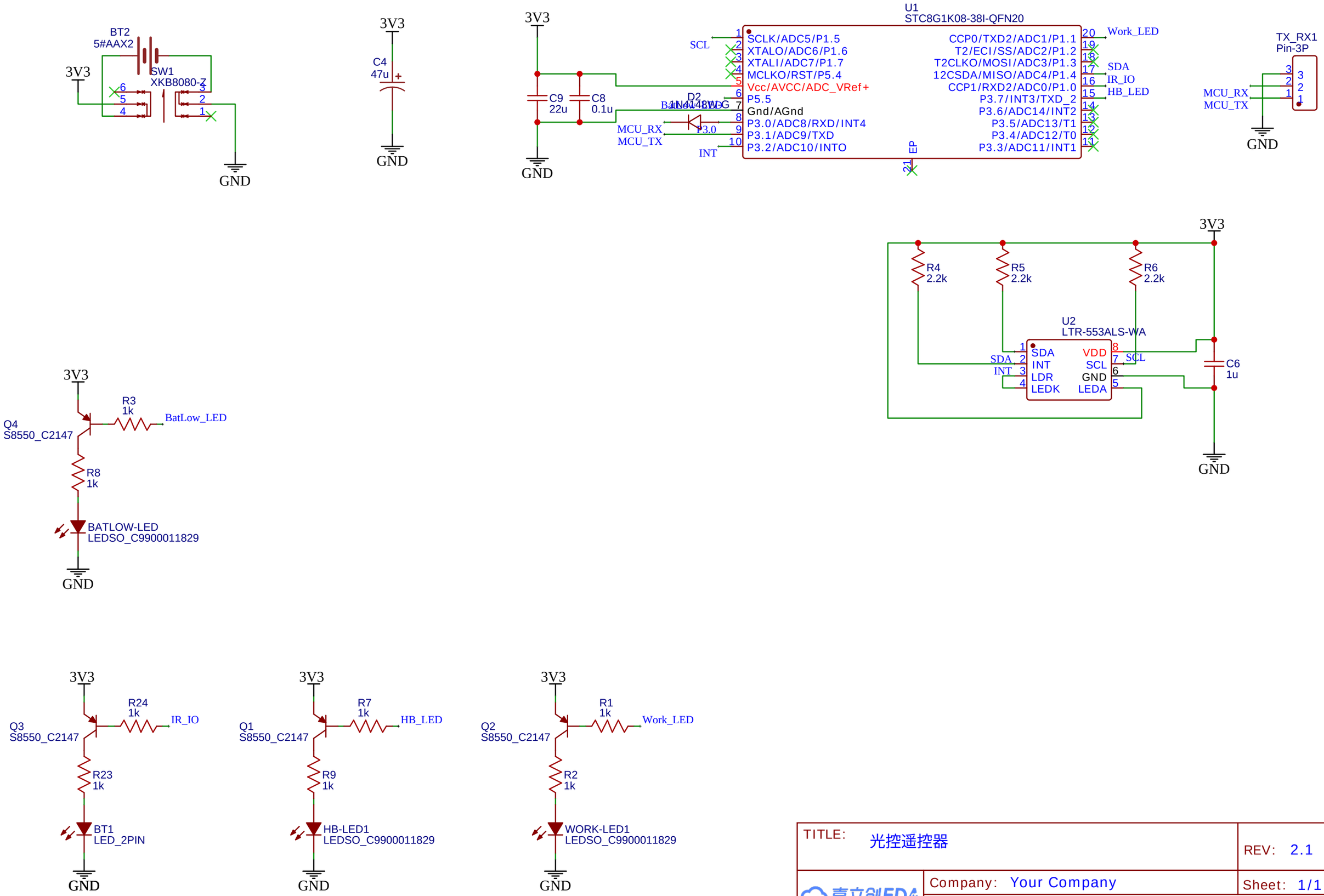

TITLE: 光控遥控器		REV: 2.1
嘉立创EDA	Company: Your Company	Sheet: 1/1
	Date: 2023-04-30 Drawn By:	