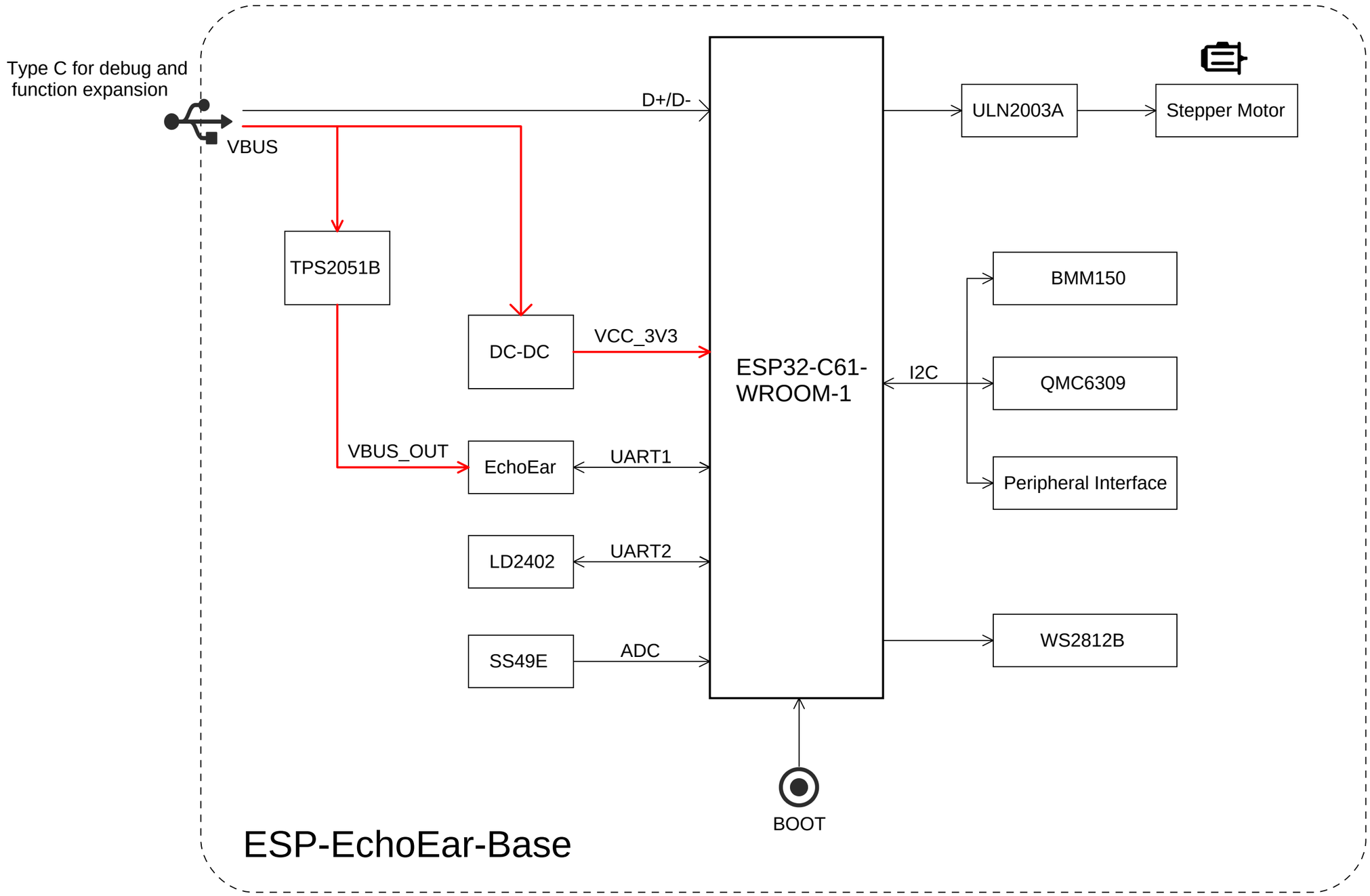


| | | | |
|---|---|---|---|
| Schematic | SCH-ESP-EchoEar-Base-MainBoard-V1_0 | Create Date | 2025-11-26 |
| | | Update Date | 2025-11-26 |
| Board | ESP-EchoEar-Base-MainBoard-V1_0 | Page Name | Block |
| Version | | ESP-EchoEar-Base | |
| Size | | | |
| | | Page 1 | Count 2 |
| ESPRESSIF | | Espressif | |

# USB-C

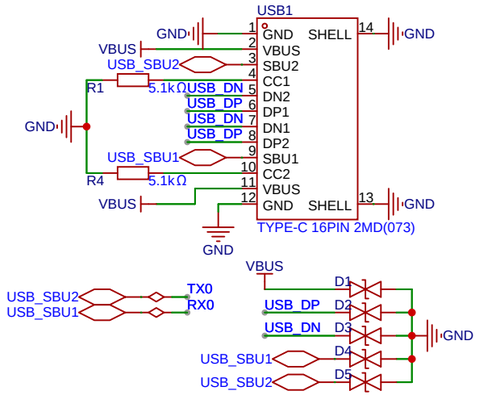


# 500mA Current Limit

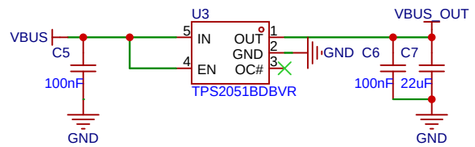


# DC-DC

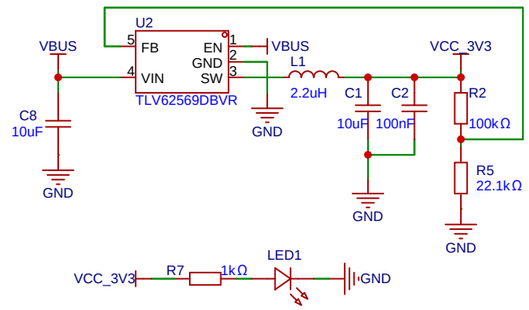


# ESP32-C61

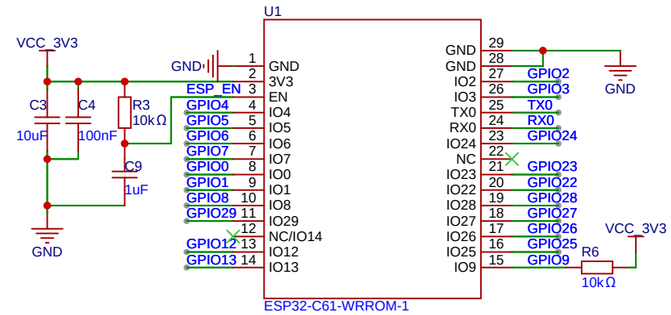


# Stepper Motor Driver

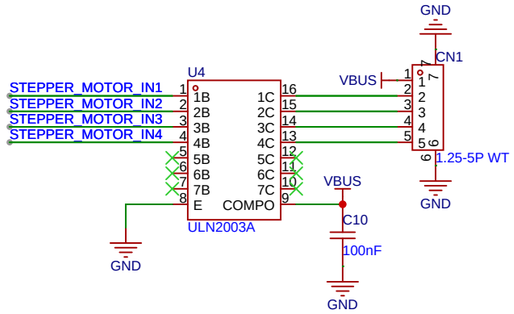


# Rotary Table Connector

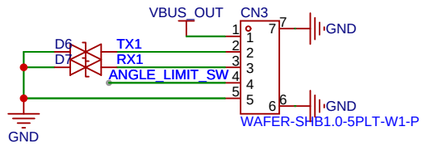


# WS2812B

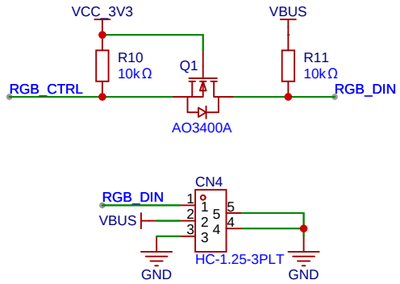


# LD2402

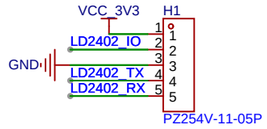


# I2C

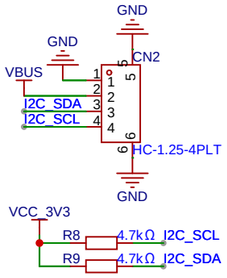


# BMM150

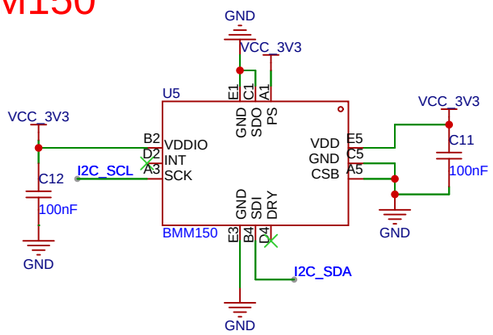


# QMC6309

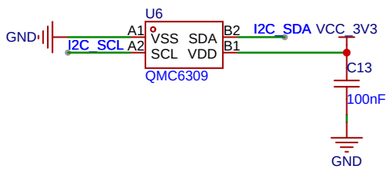


# BOOT

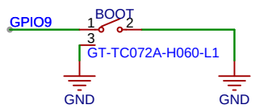


# Linear Hall Sensor

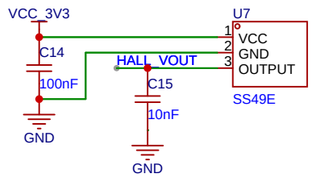


USB_DN — GPIO12
USB_DP — GPIO13
GPIO2 — I2C_SDA
GPIO3 — I2C_SCL

GPIO28 — STEPPER_MOTOR_IN1
GPIO27 — STEPPER_MOTOR_IN2
GPIO26 — STEPPER_MOTOR_IN3
GPIO25 — STEPPER_MOTOR_IN4
GPIO4 — RGB_CTRL
GPIO5 — HALL_VOUT

GPIO1 — ANGLE_LIMIT_SW
GPIO8 — RX1
GPIO29 — TX1
GPIO7 — LD2402_IO
GPIO23 — LD2402_TX
GPIO22 — LD2402_RX

| | | | |
|---|---|---|---|
| 原理图 | SCH-ESP-EchoEar-Base-MainBoard-V1_0 | 创建日期 | 2025-11-25 |
| | | 更新日期 | 2025-11-26 |
| 板子 | ESP-EchoEar-Base-MainBoard-V1_0 | 图页 | Function |
| 绘制 | | ESP-EchoEar-Base | |
| 审阅 | | | |
| | | 版本 / 尺寸 | 页 2 共 2 |
| ESPRESSIF | | Espressif | |