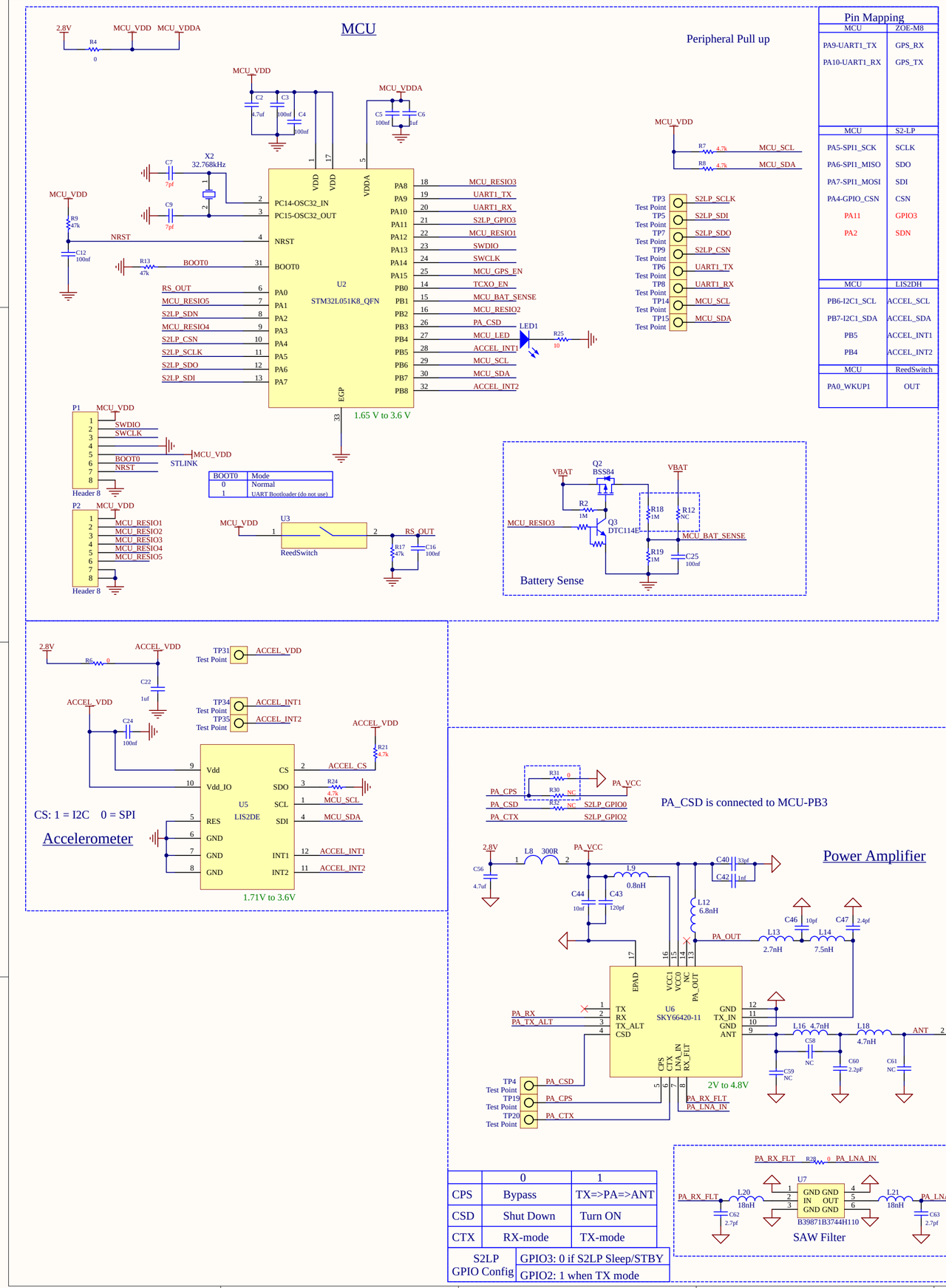

Pin Mapping	
MCU	ZOE-M8
PA9-UART1_TX	GPS_RX
PA10-UART1_RX	GPS_TX
MCU	S2-LP
PA5-SPI1_SCK	SCLK
PA6-SPI1_MISO	SDO
PA7-SPI1_MOSI	SDI
PA4-GPIO_CSN	CSN
PA11	GPIO3
PA2	SDN
MCU	LIS2DH
PB6-I2C1_SCL	ACCEL_SCL
PB7-I2C1_SDA	ACCEL_SDA
PB5	ACCEL_INT1
PB4	ACCEL_INT2
MCU	ReedSwitch
PA0_WKUP1	OUT

BOOT0	Mode
0	Normal
1	UART Bootloader (do not use)

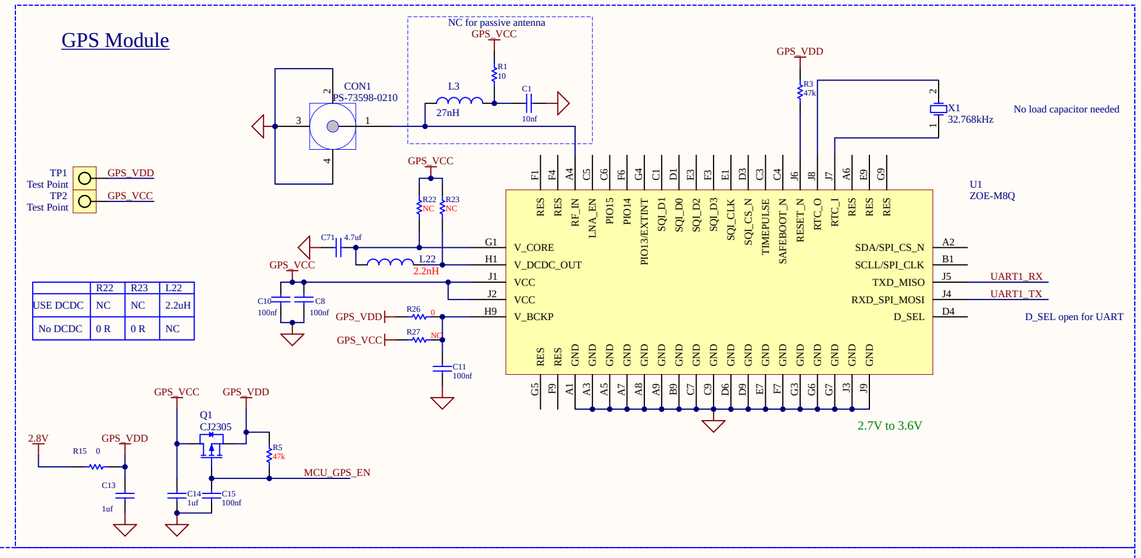

	R22	R23	L22
USE DCDC	NC	NC	2.2uH
No DCDC	0 R	0 R	NC

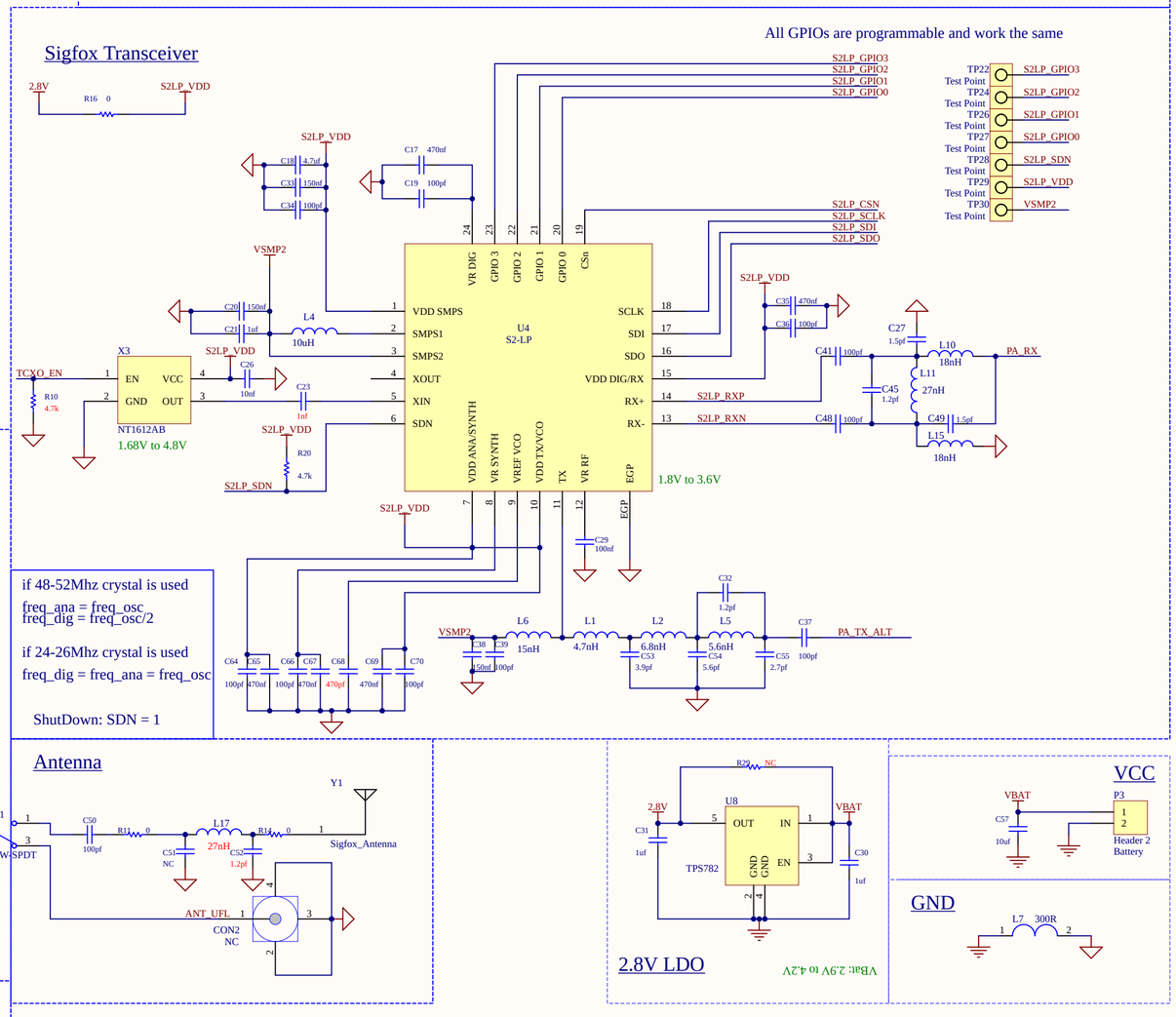

if 48-52Mhz crystal is used
freq_ana = freq_osc
freq_dig = freq_osc/2

if 24-26Mhz crystal is used
freq_dig = freq_ana = freq_osc

ShutDown: SDN = 1

CS: 1 = I2C 0 = SPI

	0	1
CPS	Bypass	TX=>PA=>ANT
CSD	Shut Down	Turn ON
CTX	RX-mode	TX-mode
S2LP GPIO Config	GPIO3: 0 if S2LP Sleep/STBY	
	GPIO2: 1 when TX mode	

PCB copper thickness of 1oz

Title	TKT40339 Sigfox Rhino VB	Tektos Ecosystems Limited 20/F, 64 Victoria Rd. Kwong Ga Fty Bldg. Hong Kong	Cannot open file R:\Tektos Graphic Guideline_2013-07\Tekt
Size: A2	Number:	Revision:B	
Date: 5/12/2025	Time: 12:27:17 am	Sheet 0 of 0	
File: C:\Users\leo111\OneDrive\Desktop\Project\Tektos\Sigfox\HW\VersionB\TKT40339_Rhino_VB_20190430.SCH			

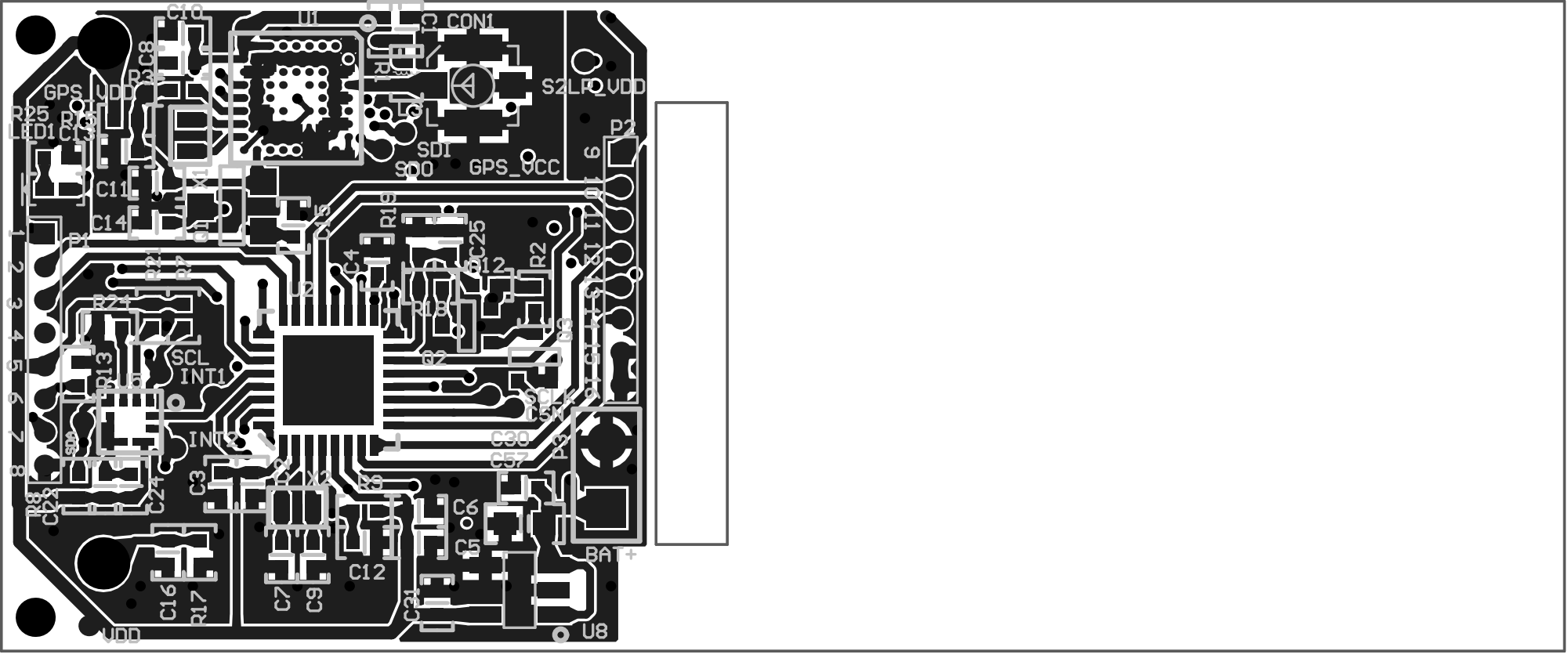
C10
U1
CON1
C8
R3
GPS_VDD
R25
R15
LED1
C13
L1
S2LP_VDD
P2
SDI
SDO
GPS_VCC
C11
C14
X1
R9
R16
C25
C4
R2
P1
R21
R4
R24
R18
R13
SCL
INT1
G2
SCL
INT2
C30
C57
C3
C2
X2
R8
C6
C5
C24
C12
BAT+
C16
R17
C7
C9
C21
VDD
U8

Top Layer

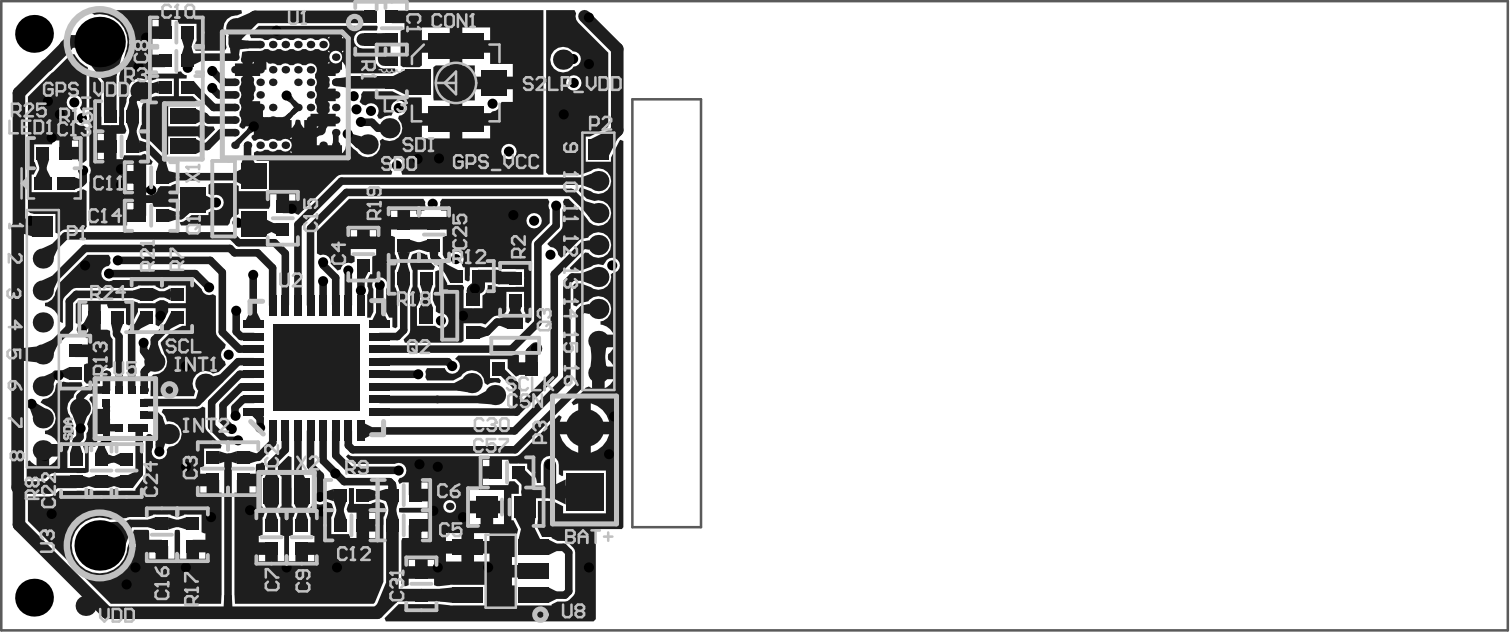
C10
CON1
R3
GPS_VDD
R25
LED1
C13
R5
C11
C14
S2LP_VDD
P2
SDI
SDO
GPS_VCC
R16
C25
C4
C12
R2
R18
R21
R22
U2
R24
R13
R15
SCL
INT1
INT2
C28
C57
C24
C3
R6
C6
C5
C12
C7
C9
C21
C16
R17
L3
VDD
BAT+
U8

Top Layer

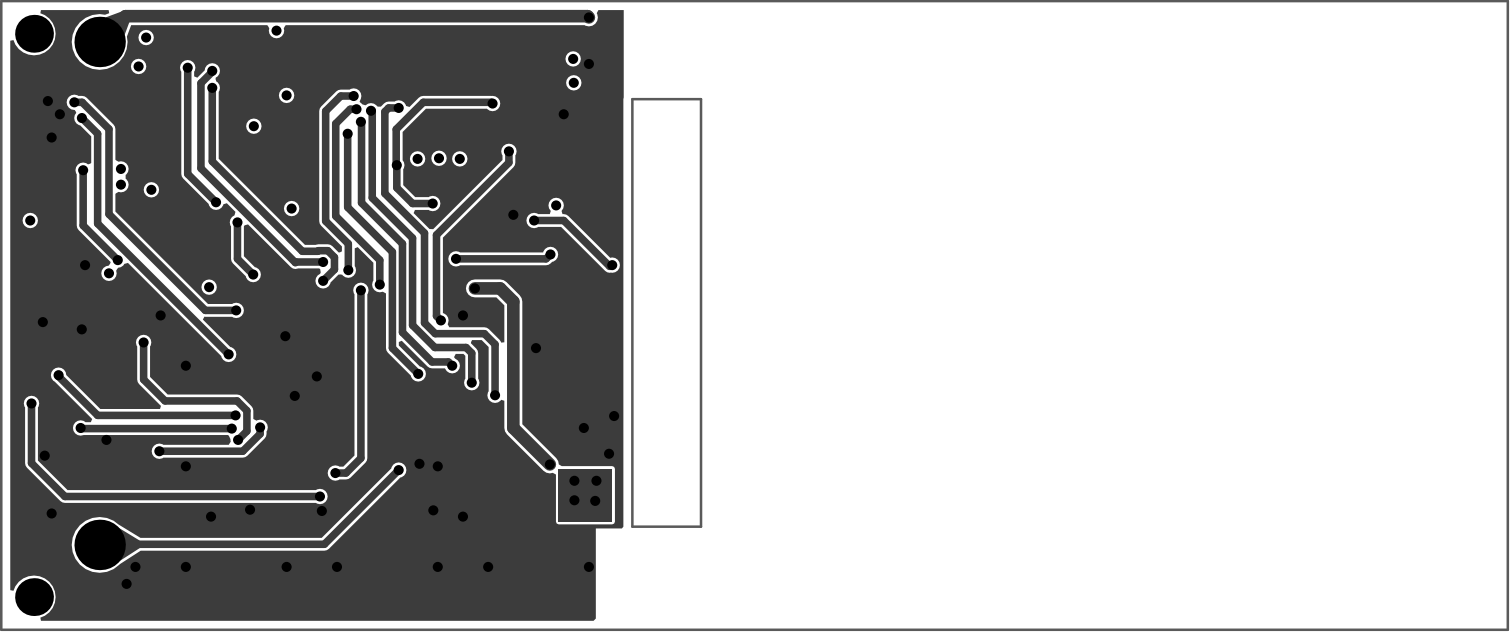

Signal Layer

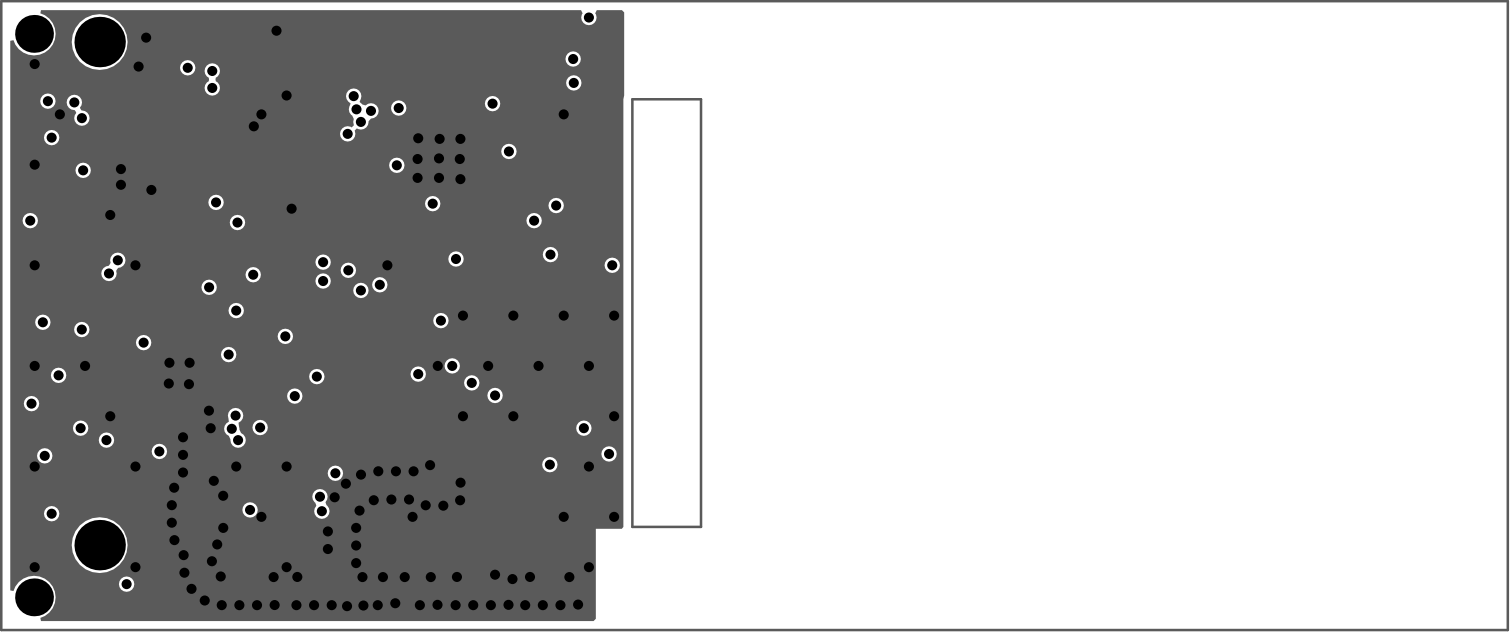

Ground Layer

Bottom Layer

Footprint	Comment	Description	Designator	Quantity	PN
HEADER 8P	Header 8	Header, 8-Pin	P5, P2	2	
Sqfox_Antenna	Sqfox_Antenna	Sqfox Antenna	Y1	1	
0.8mm Test pin	Test Point		TP1, TP2, TP3, TP4, TP5, TP6, TP7, TP8, TP9, TP14, TP15, TP19, TP20, TP22, TP24, TP26, TP27, TP28, TP29, TP30, TP31, TP34, TP35	23	
0402C_3D	NC	CAP, 0402, NC	C58, C59, C61	3	
0402C_3D	NC	CAP, 0402, TBD	C51	1	
0402Rx2_3D	NC	NC, Resistor, 0402, 100ohm	R52	1	
0402Rx2_3D	NC	Resistor, 0402, NC	R12	1	
HDR1X2	Header 2	Header, 2-Pin	P5	1	
UFL_connector	NC	UFL connector	CON2	1	
0402Rx2_3D	NC	NO Resistor, 0402, 0ohm	R62, R63, R67, R69, R60	5	[NoValue]_CRCW040200000ZEEC
0402C_3D	10nf	CAP, 0402, 10V, 10nf	C1, C26, C44	3	04022C103MAT2A
0402C_3D	4.7uf	CAP, 0402, 10V, 100nf	C71	1	04022D104KAT9A
0402C_3D	100nf	CAP, 0402, 10V, 100nf	C3, C4, C5, C8, C10, C11, C12, C15, C16, C24, C25, C29	12	04022D104KAT9A
0402C_3D	2.2pF	CAP, 0402, 10V, 2.2pf	C60	1	885012005003
0402C_3D	10pf	CAP, 0402, 10V, 10pf	C46	1	885012005007
0402C_3D	33pf	CAP, 0402, 10V, 33pf	C40	1	885012005010
0402C_3D	470pf	CAP, 0402, 10V, 470pf	C69	1	885012005017
0402C_3D	100pf	CAP, 0402, 10V, 100pf	C33, C34, C36, C37, C39, C41, C48, C50, C54, C66, C70	11	885012005001
0402Rx2_3D	10	Resistor, 0402, 10 ohm	R65	1	ACD402FR-0710RL
0402Rx2_3D	10	Resistor, 0402, 10ohm	R5	1	ACD402FR-0710RL
SOT323_3D	DTC114E	R1=10K, R2=10K, NPN Transistors with Monolithic Bias Resistor NetworkNPN Transistors with Monolithic Bias Resistor Network	Q3	1	ADTC114EUAQ-7
APHHS1005QBKCD_LED0402_B_3D	LED1	LEDGreen 0402	LED1	1	APHHS1005CGCK
3.0x3.0x1.0mm saw filter	B39871B3744H110	TDK SMD 868.3 MHz SAW FILTER	LF	1	B39871B3744H110
SOT323_3D	BSS84	PCHANNEL 60V-NXC3MENT MODEMOSFET	Q2	1	BSS84WQ-7-F
0402C_3D	1nf	CAP, 0402, 10V, 1nf	C23, C42	2	C0402C102K1GECAUTO
0402C_3D	120pf	CAP, 0402, 10V, 120pf	C43	1	C0402C121J5GACTU
0402C_3D	7pf	CAP, 0402, 10V, 20pf	C7, C9	2	C0402C200K5GACTU
0603C_3D	10uf	CAP, 0603, 16V, 10uf	C57	1	C0603C103M4RACTU
0402C_3D	150nf	CAP, 0402, 10V, 150nf	C20, C33, C38	3	C5005X7R1A154M050BB
0402C_3D	1uf	CAP, 0402, 10V, 1uf	C6, C13, C14, C21, C22, C30, C31	7	CC0402JRK5R8BB104
SOT23_3D(TO-236AB)	CJE305	PCHANNEL S-MOSMOSFET	Q6	1	CJE305
UFL_connector	PS-73598-0210	UFL connector	CON1	1	CONUFL001-SMD
0402Rx2_3D	47k	Resistor, 0402, 47k ohm	R3, R5, R8, R13, R17	5	CRCW040247K0FKEEC
0402R3 pad1, d-shape	SWSPDT	SPDT Subminiature Toggle Switch, Right Angle Mounting, Vertical Actuation	S1	1	CRCW040200000ZEEC
0402Rx2_3D	0	Resistor, 0402, 0ohm	R4, R6, R11, R14, R15, R16, R20, R29	8	CRCW040200000ZEEC
0402Rx2_3D	0	Resistor, 0402, 100ohm	R81	1	CRCW040200000ZEEC
1.8x1.0x0.5mm,crystal	32.768Hz	32.768Hz, +/-20ppm, 4pF	X1, X2	2	ECS- 327-7-16-CR-TR
0402L_3D	2.7nH	Inductor, 2.7nH, 0402	L13	1	GLM155C1H2R7BA16D
0402C_3D	1.2pf	CAP, 0402, 10V, 1.2pf	C52, C45	2	GJM1555C1H1R2BB01D
0402C_3D	1.2pf	CAP, 0402, TBD	C52	1	GJM1555C1H1R2WB01D
0402C_3D	1.5pf	CAP, 0402, 10V, 1.5pf	C27, C49	2	GJM1555C1H1R5BB01D
0402C_3D	2.4pf	CAP, 0402, 10V, 2.4pf	C47	1	GJM1555C1H2R4WB01D
Reed switch 14027 Lifted	ReedSwitch	ReedSwitch	U3	1	GRS6015J001
0402C_3D	2.7pf	CAP, 0402, 10V, 2.7pf	C55, C62, C63	3	GRM0225C1E2R7CA01L
0402L_3D	300R	Ferrite bead, 300R, 200mA	L7, L8	2	HBB0402R301V
LGA12-1	LIS3DE	ultra low-power high performance 3-axes "femto" accelerometer	U6	1	LIS2DE12TR
0402L_3D	18nH	Inductor, 18nH, 0402	L10, L15, L20, L21	4	LQG15HN18NH02D
0402L_3D	7.5nH	Inductor, 7.5nH, 0402	L14	1	LQG15HS7N5H02D
0402L_3D	6.8nH	Inductor, 6.8nH, 0402	L2, L12	2	LQG15HS8N8J02D
0402L_3D	15nH	Inductor, 15nH, 0402	L6	1	LQG15HS15NJ02D
0402L_3D	5.6nH	Inductor, 5.6nH, 0402	L5	1	LQG15WS5N6S02D
0603	2.2nH	Inductor, 2.2nH, 0402	L22	1	LQMS6MPN2R2NGD
0603L_3D	10uH	Inductor, 10uH, 0603	L4	1	LQM18FN100M00D
0402L_3D	27nH	Inductor, 27nH, 0402	L3, L11	2	LQW15AN27NG80D
0402L_3D	27nH	Inductor, TBD, 0402	L17	1	LQW15AN27NG80D
0402C_3D	470nf	CAP, 0402, 10V, 470nf	C17, C35, C65, C67, C69	5	LMK105BJ474MP-F
0402L_3D	0.8nH	Inductor, 0.8nH, 0402	L9	1	MLG1005S0N8C
0402L_3D	4.7nH	Inductor, 4.7nH, 0402	L1, L16, L18	3	MLG1005S6N7CT000
1.6x1.2x0.45mm tcxo	NTI1612AB	Temperature Compensated Crystal Oscillator(TCXO) with EnDfunction for high-precision GPS, TCXO, 10pF	X0	1	NTI1612AB-50MHZ-ENDS348A
0402Rx2_3D	1M	Resistor, 0402, 1M ohm	R2, R18, R19	3	RC0402FR-1031ML
0402Rx2_3D	4.7k	Resistor, 0402, 47k ohm	R7, R8, R10, R20, R21, R24	6	RT0402FRE074K7L
QFN24L_4x4mm	S2-LP	Ultra-low(power, high performance, sub-1GHz transceiver	U4	1	S2-LPQTR
SKY66420-11	SKY66420-11	SKY66420-11: 860 to 930 MHz ISM Front-End Module	U5	1	SKY66420-11
UFQFPN32	STM32L051K8_QFN	ultra-low-power 32 bit MCU Arm® based Cortex® M0+, up to 64 KB Flash, 8 KB SRAM, 2KBEEPROM, ADC	U2	1	STM32L051K8U6
TSOT23-5	TPS782	TPS782, 1l, LDO, Iq =500nA, Iout = 150mA, Vout = 2.8V, Vdropout = 130mV	U8	1	TPS78228DDCT
0402C_3D	3.9pf	CAP, 0402, 10V, 3.9pf	C53	1	UMK105C0J3R9UW-F
0402C_3D	5.6pf	CAP, 0402, 10V, 5.6pf	C54	1	GJM0225R6CQQPW1BC
s-tga	2CE-M8Q	2CE-M8Q, UBlox, GPS3lP	U1	1	2CE-M8Q
0402C_3D	4.7uf	CAP, 0402, 10V, 4.7uf	C2, C18, C56	3	ZH815KR61A475MEE1D

C10
U1
C1
CON1
C8
R3
GPS_VDD
R1
S2LP_VDD
R25
L3
P2
LED
SDI
SDO
GPS_VCC
X1
Q1
C15
R19
C25
R12
R2
C4
R21
R7
U2
R18
SOT323
SC70
Q3
Q2
SOT323
SC70
SCL
INT1
J5
SCLK
CSN
INT2
C30
C57
P3
C3
C2
X2
R9
C6
R8
C22
C24
C5
BAT+
U3
C12
C16
R17
C7
C9
C31
U8
VDD

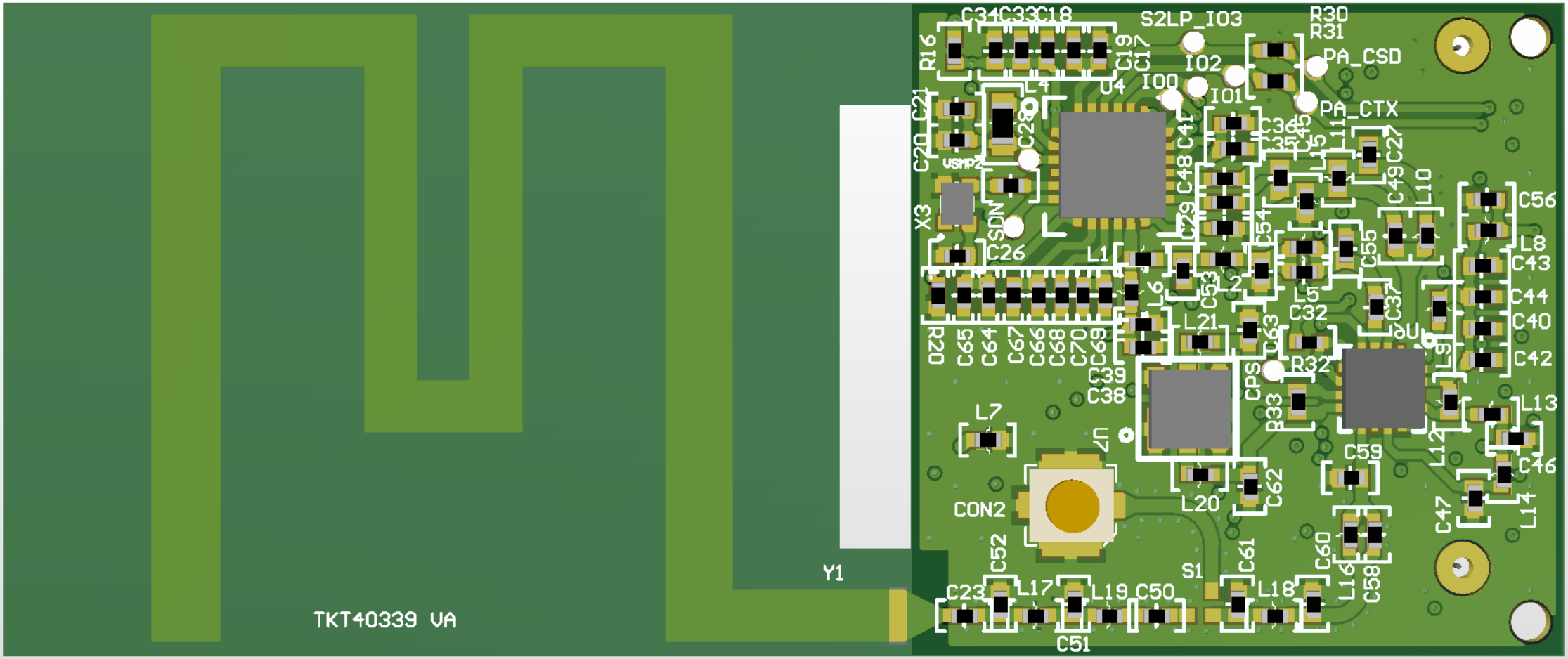
TKT40339 VA
Y1
CON2
S2LP_IO3
PA_CSD
PA_CTX
IO2
IO0
IO1
SDN
VSMP2
CPS
S1
C34
C33
C18
R30
R31
R16
C19
C17
C21
C20
C28
C26
X3
L1
L6
L2
L5
L21
L7
U7
U4
U9
C32
R32
R33
C39
C38
C65
C64
C67
C66
C68
C70
C69
R20
C23
L17
L19
C50
C51
C52
L20
C62
C61
L18
C60
C59
C58
L16
C47
L14
L12
L13
C46
L9
C42
C40
C44
C43
L8
C56
L10
C49
C27
L11
C45
C35
C36
C41
C48
C29
C54
C53
C63
C37
C55