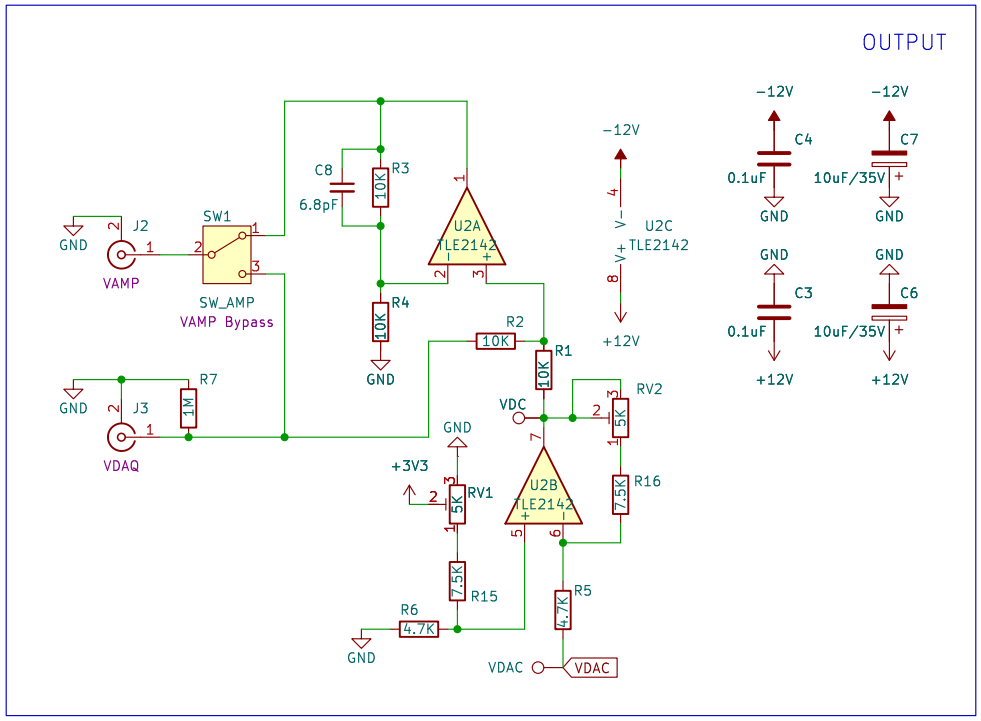

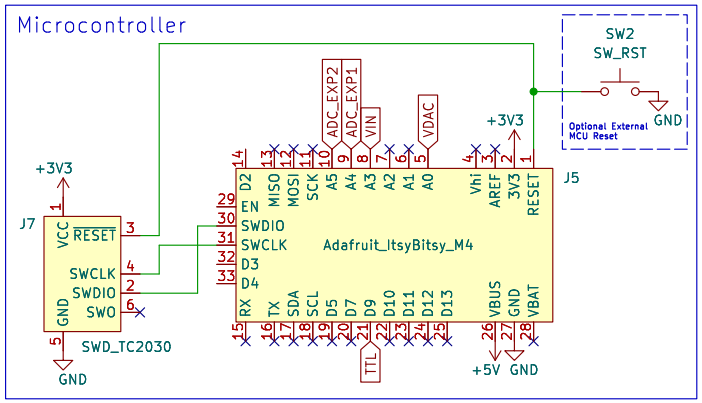

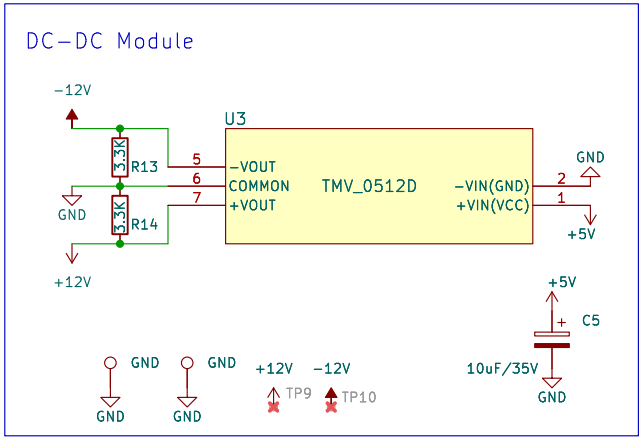

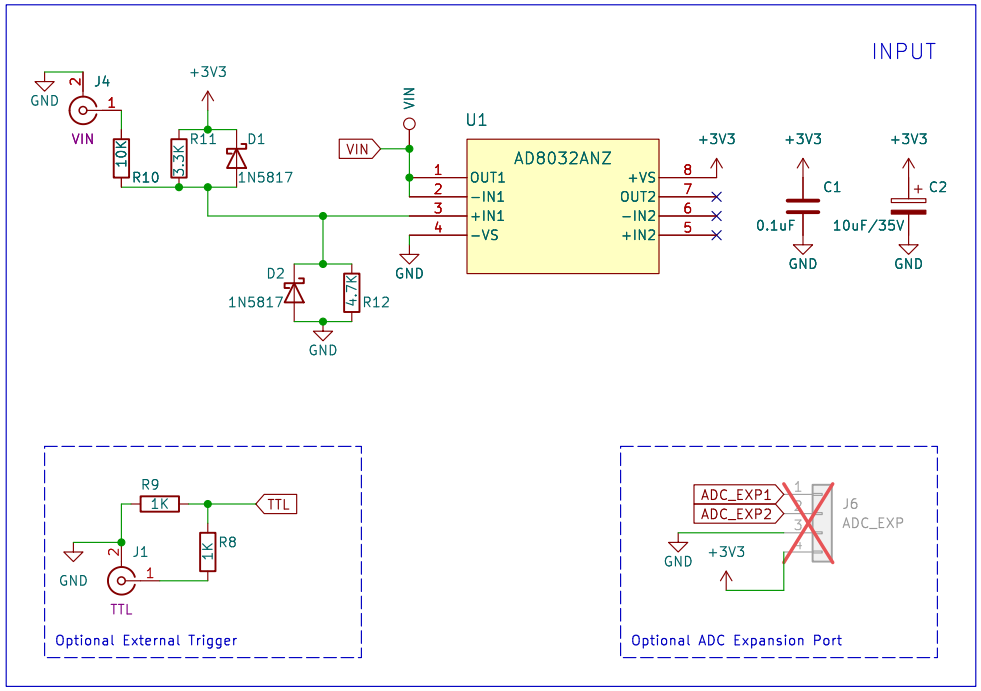

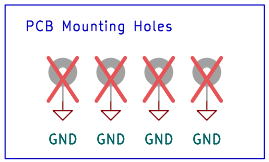

© Leonardo Covarrubias 2024
Based on revisions by Aditya Asopa, Bhalla Lab, NCBS Bangalore
Based on Desai, Gray, Johnston, eNeuro 2017, updated Sep 2019
Licensed under CC BY 4.0

Sheet: /
File: odc-1.2.kicad_sch

Title: Open Dynamic Clamp

Size: USLetter	Date: 2024-03-17	**Rev: 1.2.1**
KiCad E.D.A. 8.0.1		Id: 1/1