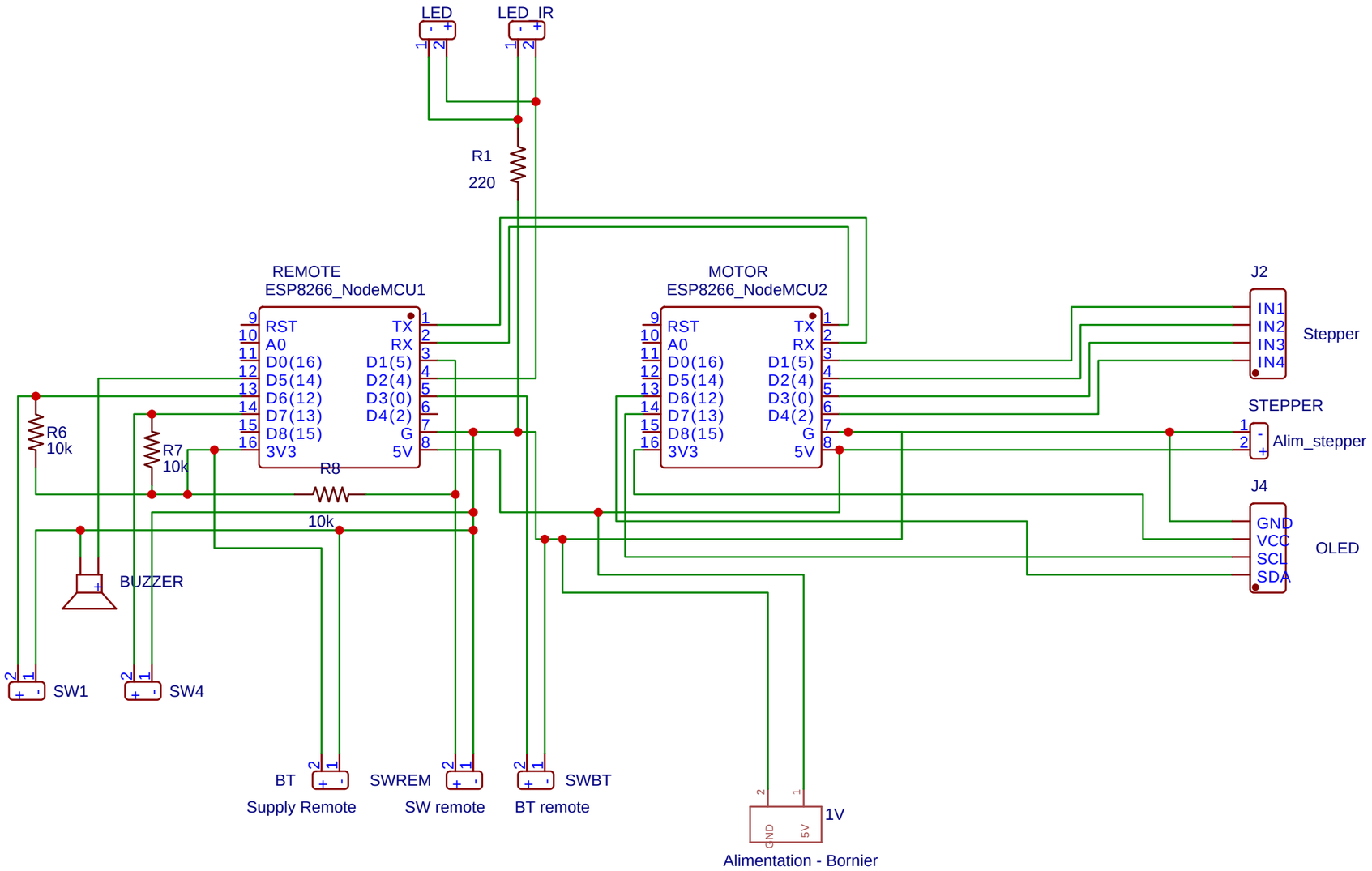

TITLE: Photogrammetry turntable	REV: 2
EasyEDA	Company: Léo En Folie — Sheet: 1/1
	Date: 2025-06-25 — Drawn By: Léo