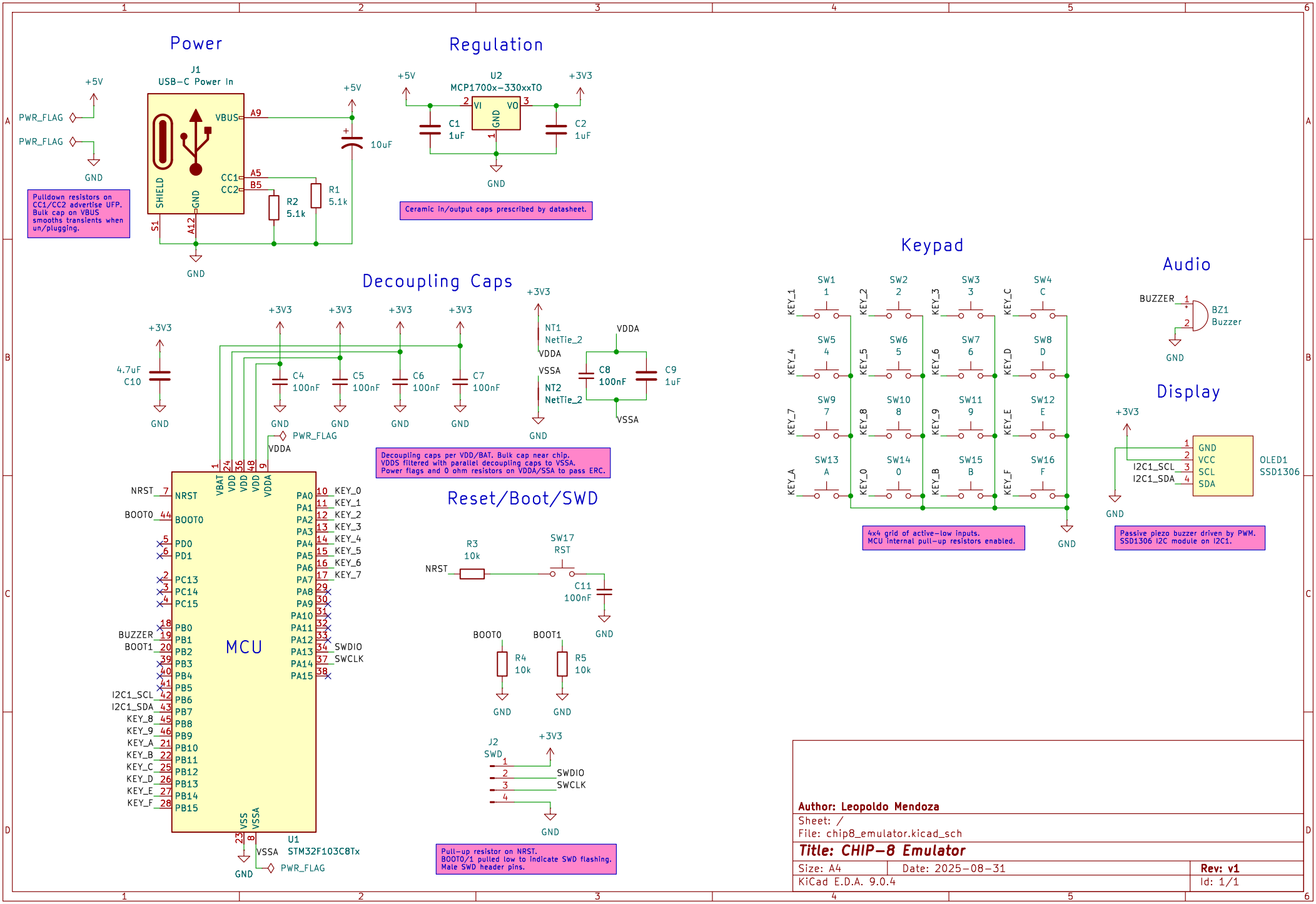
Power
J1
USB-C Power In
+5V
PWR_FLAG
PWR_FLAG
GND
VBUS
A9
CC1
A5
CC2
B5
SHIELD
GND
S1
A12
R2
5.1k
R1
5.1k
10uF
Pulldown resistors on CC1/CC2 advertise UFP. Bulk cap on VBUS smooths transients when un/plugging.
Regulation
U2
MCP1700x-330xxTO
VI
VO
GND
C1
1uF
C2
1uF
+3V3
Ceramic in/output caps prescribed by datasheet.
Decoupling Caps
4.7uF
C10
C4
100nF
C5
100nF
C6
100nF
C7
100nF
NT1
NetTie_2
NT2
NetTie_2
VDDA
VSSA
C8
100nF
C9
1uF
PWR_FLAG
Decoupling caps per VDD/BAT. Bulk cap near chip.
VDDS filtered with parallel decoupling caps to VSSA.
Power flags and 0 ohm resistors on VDDA/SSA to pass ERC.
MCU
U1
STM32F103C8Tx
VBAT
VDD
VDDA
NRST
BOOT0
PD0
PD1
PC13
PC14
PC15
PB0
PB1
PB2
PB3
PB4
PB5
PB6
PB7
PB8
PB9
PB10
PB11
PB12
PB13
PB14
PB15
PA0
PA1
PA2
PA3
PA4
PA5
PA6
PA7
PA8
PA9
PA10
PA11
PA12
PA13
PA14
PA15
VSS
VSSA
BUZZER
BOOT1
I2C1_SCL
I2C1_SDA
KEY_8
KEY_9
KEY_A
KEY_B
KEY_C
KEY_D
KEY_E
KEY_F
KEY_0
KEY_1
KEY_2
KEY_3
KEY_4
KEY_5
KEY_6
KEY_7
SWDIO
SWCLK
Reset/Boot/SWD
R3
10k
SW17
RST
C11
100nF
R4
10k
R5
10k
J2
SWD
Pull-up resistor on NRST.
BOOT0/1 pulled low to indicate SWD flashing.
Male SWD header pins.
Keypad
SW1
1
SW2
2
SW3
3
SW4
C
SW5
4
SW6
5
SW7
6
SW8
D
SW9
7
SW10
8
SW11
9
SW12
E
SW13
A
SW14
0
SW15
B
SW16
F
KEY_1
KEY_2
KEY_3
KEY_C
KEY_4
KEY_5
KEY_6
KEY_D
KEY_7
KEY_8
KEY_9
KEY_E
KEY_A
KEY_0
KEY_B
KEY_F
4x4 grid of active-low inputs.
MCU internal pull-up resistors enabled.
Audio
BUZZER
BZ1
Buzzer
Display
OLED1
SSD1306
GND
VCC
SCL
SDA
I2C1_SCL
I2C1_SDA
Passive piezo buzzer driven by PWM.
SSD1306 I2C module on I2C1.
Author: Leopoldo Mendoza
Sheet: /
File: chip8_emulator.kicad_sch
Title: CHIP-8 Emulator
Size: A4
Date: 2025-08-31
Rev: v1
KiCad E.D.A. 9.0.4
Id: 1/1