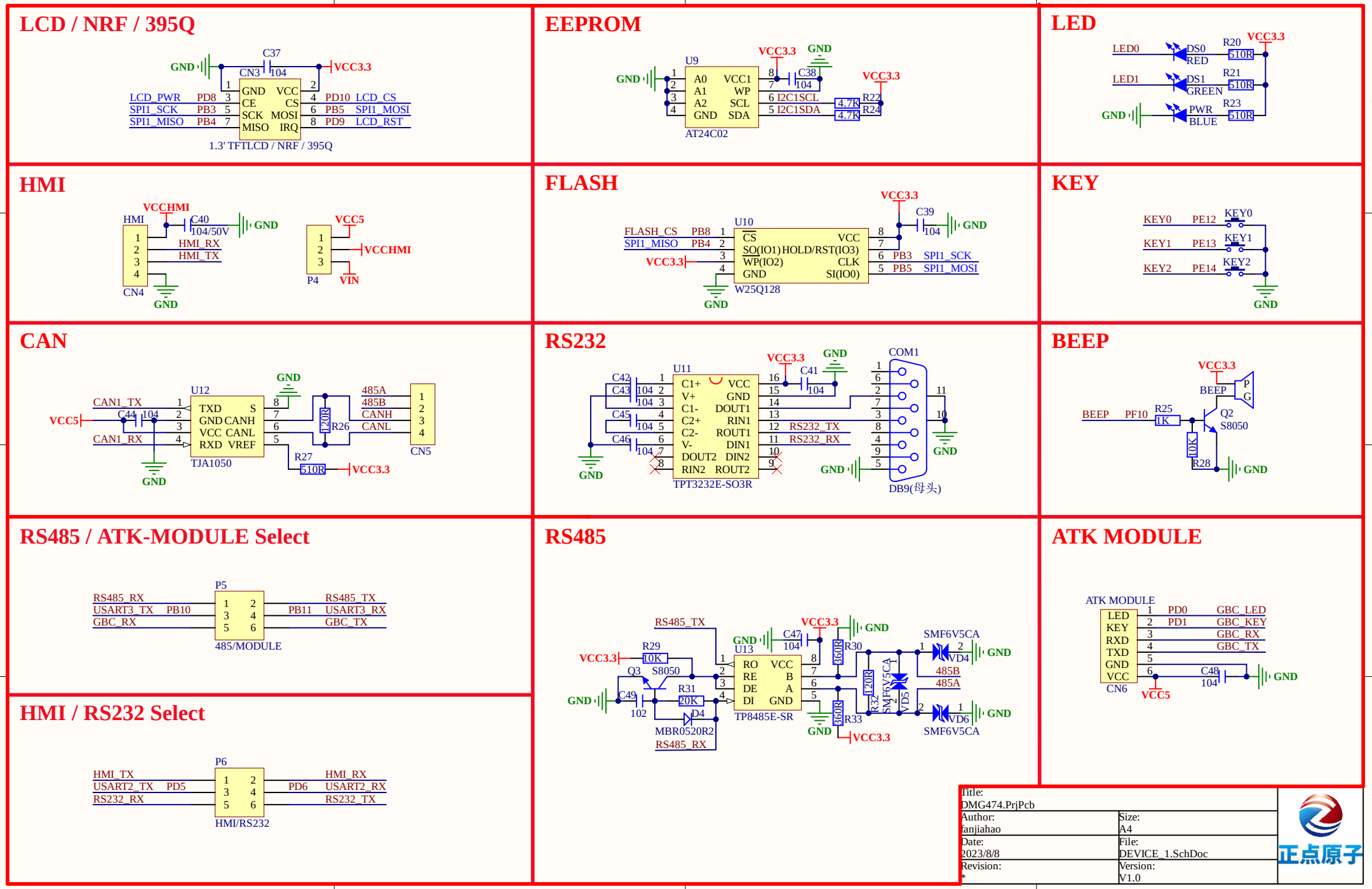
LCD / NRF / 395Q
C37
104
GND
VCC3.3
CN3
LCD_PWR PD8
SPI1_SCK PB3
SPI1_MISO PB4
GND VCC
CE CS
SCK MOSI
MISO IRQ
PD10 LCD_CS
PB5 SPI1_MOSI
PD9 LCD_RST
1.3' TFTLCD / NRF / 395Q
EEPROM
U9
A0 VCC1
A1 WP
A2 SCL
GND SDA
I2C1SCL
I2C1SDA
C38
R22
R24
4.7K
AT24C02
LED
LED0
LED1
DS0 RED
DS1 GREEN
PWR BLUE
R20
R21
R23
510R
HMI
VCCHMI
HMI
C40
104/50V
HMI_RX
HMI_TX
CN4
VCC5
VCCHMI
VIN
P4
FLASH
U10
FLASH_CS PB8
SPI1_MISO PB4
CS VCC
SO(IO1) HOLD/RST(IO3)
WP(IO2) CLK
GND SI(IO0)
PB3 SPI1_SCK
PB5 SPI1_MOSI
C39
W25Q128
KEY
KEY0 PE12
KEY1 PE13
KEY2 PE14
CAN
U12
CAN1_TX
CAN1_RX
TXD S
GND CANH
VCC CANL
RXD VREF
TJA1050
C44
R26
120R
R27
510R
485A
485B
CANH
CANL
CN5
RS232
U11
C1+ VCC
V+ GND
C1- DOUT1
C2+ RIN1
C2- ROUT1
V- DIN1
DOUT2 DIN2
RIN2 ROUT2
TPT3232E-SO3R
C41
RS232_TX
RS232_RX
COM1
DB9(母头)
BEEP
BEEP PF10
R25
1K
Q2
S8050
R28
10K
RS485 / ATK-MODULE Select
P5
RS485_RX
USART3_TX PB10
GBC_RX
PB11 USART3_RX
RS485_TX
GBC_TX
485/MODULE
HMI / RS232 Select
P6
HMI_TX
USART2_TX PD5
RS232_RX
PD6 USART2_RX
HMI_RX
RS232_TX
HMI/RS232
RS485
RS485_TX
RS485_RX
R29
10K
Q3
S8050
R31
20K
D4
MBR0520R2
C49
102
U13
RO VCC
RE B
DE A
DI GND
TP8485E-SR
C47
R30
R33
360R
R32
120R
SMF6V5CA
VD4
VD5
VD6
485B
485A
ATK MODULE
LED
KEY
RXD
TXD
GND
VCC
CN6
PD0 GBC_LED
PD1 GBC_KEY
GBC_RX
GBC_TX
C48
Title:
DMG474.PrjPcb
Author:
fanjiahao
Size:
A4
Date:
2023/8/8
File:
DEVICE_1.SchDoc
Revision:
*
Version:
V1.0
正点原子

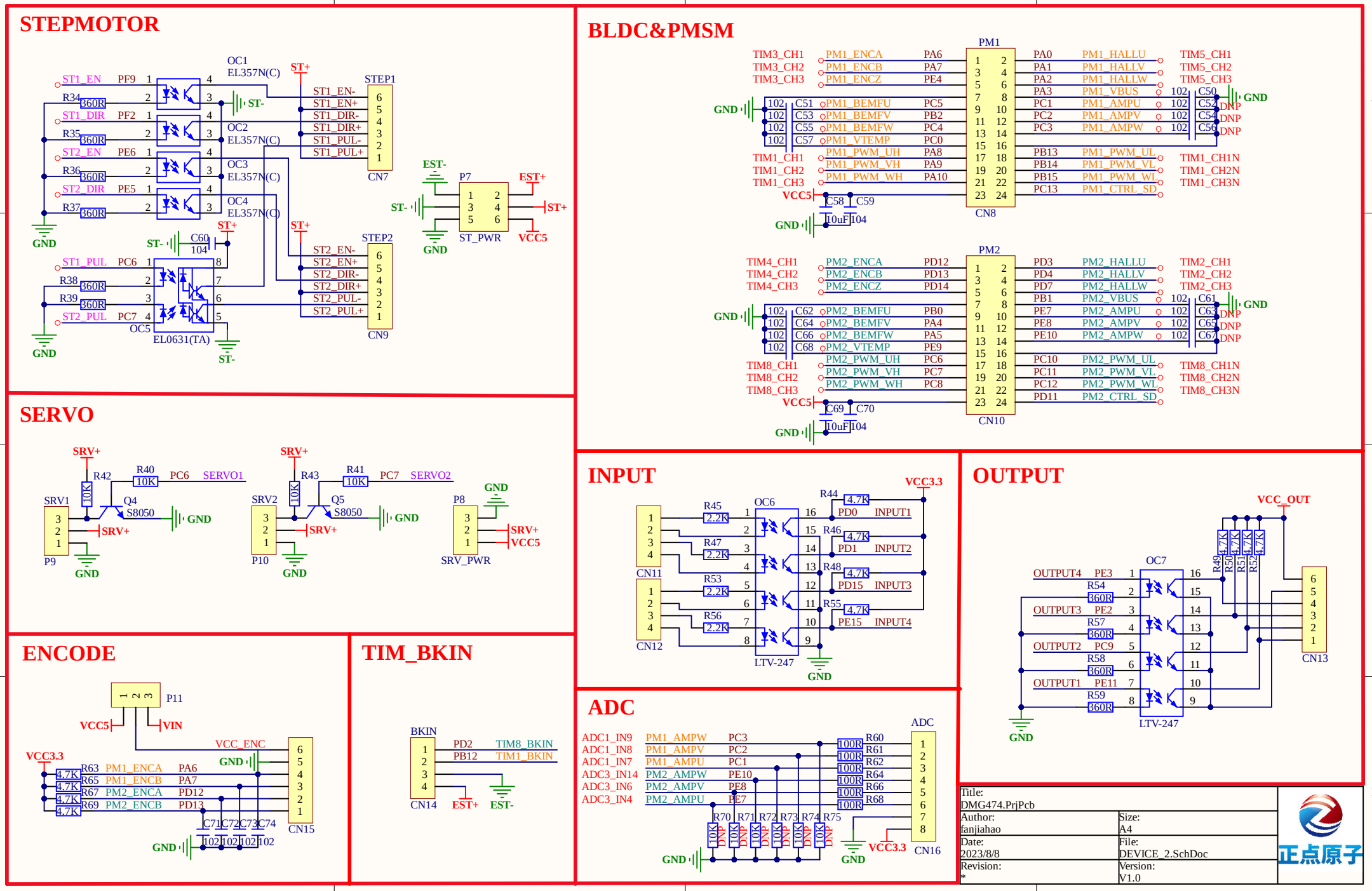
STEPMOTOR
ST1_EN PF9 R34 360R
ST1_DIR PF2 R35 360R
ST2_EN PE6 R36 360R
ST2_DIR PE5 R37 360R
OC1 EL357N(C)
OC2 EL357N(C)
OC3 EL357N(C)
OC4 EL357N(C)
ST+
ST-
STEP1
ST1_EN- ST1_EN+ ST1_DIR- ST1_DIR+ ST1_PUL- ST1_PUL+
CN7
EST-
EST+
P7
ST_PWR
VCC5
GND
C60 104
ST1_PUL PC6 R38 360R
ST2_PUL PC7 R39 360R
OC5 EL0631(TA)
STEP2
ST2_EN- ST2_EN+ ST2_DIR- ST2_DIR+ ST2_PUL- ST2_PUL+
CN9
BLDC&PMSM
PM1
TIM3_CH1 PM1_ENCA PA6
TIM3_CH2 PM1_ENCB PA7
TIM3_CH3 PM1_ENCZ PE4
PA0 PM1_HALLU TIM5_CH1
PA1 PM1_HALLV TIM5_CH2
PA2 PM1_HALLW TIM5_CH3
PA3 PM1_VBUS C50
PC1 PM1_AMPU C52 DNP
PC2 PM1_AMPV C54 DNP
PC3 PM1_AMPW C56 DNP
C51 PM1_BEMFU PC5
C53 PM1_BEMFV PB2
C55 PM1_BEMFW PC4
C57 PM1_VTEMP PC0
TIM1_CH1 PM1_PWM_UH PA8
TIM1_CH2 PM1_PWM_VH PA9
TIM1_CH3 PM1_PWM_WH PA10
PB13 PM1_PWM_UL TIM1_CH1N
PB14 PM1_PWM_VL TIM1_CH2N
PB15 PM1_PWM_WL TIM1_CH3N
PC13 PM1_CTRL_SD
C58 C59 10uF C104
CN8
PM2
TIM4_CH1 PM2_ENCA PD12
TIM4_CH2 PM2_ENCB PD13
TIM4_CH3 PM2_ENCZ PD14
PD3 PM2_HALLU TIM2_CH1
PD4 PM2_HALLV TIM2_CH2
PD7 PM2_HALLW TIM2_CH3
PB1 PM2_VBUS C61
PE7 PM2_AMPU C63 DNP
PE8 PM2_AMPV C65 DNP
PE10 PM2_AMPW C67 DNP
C62 PM2_BEMFU PB0
C64 PM2_BEMFV PA4
C66 PM2_BEMFW PA5
C68 PM2_VTEMP PE9
TIM8_CH1 PM2_PWM_UH PC6
TIM8_CH2 PM2_PWM_VH PC7
TIM8_CH3 PM2_PWM_WH PC8
PC10 PM2_PWM_UL TIM8_CH1N
PC11 PM2_PWM_VL TIM8_CH2N
PC12 PM2_PWM_WL TIM8_CH3N
PD11 PM2_CTRL_SD
C69 C70 10uF C104
CN10
SERVO
SRV+
R42 10K
R40 10K PC6 SERVO1
Q4 S8050
SRV1 P9
R43 10K
R41 10K PC7 SERVO2
Q5 S8050
SRV2 P10
P8 SRV_PWR
INPUT
VCC3.3
R45 2.2K
R47 2.2K
R53 2.2K
R56 2.2K
OC6
R44 4.7K PD0 INPUT1
R46 4.7K PD1 INPUT2
R48 4.7K PD15 INPUT3
R55 4.7K PE15 INPUT4
CN11
CN12
LTV-247
OUTPUT
VCC_OUT
OC7
OUTPUT4 PE3 R54 360R
OUTPUT3 PE2 R57 360R
OUTPUT2 PC9 R58 360R
OUTPUT1 PE11 R59 360R
R49 4.7K R50 4.7K R51 4.7K R52 4.7K
CN13
LTV-247
ENCODE
P11
VCC5 VIN
VCC_ENC
VCC3.3
R63 4.7K PM1_ENCA PA6
R65 4.7K PM1_ENCB PA7
R67 4.7K PM2_ENCA PD12
R69 4.7K PM2_ENCB PD13
C71 C72 C73 C74 102
CN15
TIM_BKIN
BKIN
PD2 TIM8_BKIN
PB12 TIM1_BKIN
CN14
EST+ EST-
ADC
ADC1_IN9 PM1_AMPW PC3
ADC1_IN8 PM1_AMPV PC2
ADC1_IN7 PM1_AMPU PC1
ADC3_IN14 PM2_AMPW PE10
ADC3_IN6 PM2_AMPV PE8
ADC3_IN4 PM2_AMPU PE7
R60 100R
R61 100R
R62 100R
R64 100R
R66 100R
R68 100R
R70 R71 R72 R73 R74 R75 10K DNP
CN16
Title: DMG474.PrjPcb
Author: fanjiahao
Size: A4
Date: 2023/8/8
File: DEVICE_2.SchDoc
Revision: *
Version: V1.0
正点原子

# MCU_ABC

U1A

| | | | | |
|---|---|---|---|---|
| | | PM1_HALLU | PA0 | 20 |
| | | PM1_HALLV | PA1 | 21 |
| | | PM1_HALLW | PA2 | 22 |
| | | PM1_VBUS | PA3 | 25 |
| | DAC1_OUT1 | PM2_BEMFV | PA4 | 26 |
| | DAC1_OUT2 | PM2_BEMFW | PA5 | 27 |
| | | PM1_ENCA | PA6 | 28 |
| | | PM1_ENCB | PA7 | 29 |
| | | PM1_PWM_UH | PA8 | 69 |
| | | PM1_PWM_VH | PA9 | 70 |
| | | PM1_PWM_WH | PA10 | 71 |
| | USB_D- | | PA11 | 72 |
| | USB_D+ | | PA12 | 73 |
| | SWDIO | | PA13 | 76 |
| | SWCLK | | PA14 | 77 |
| | I2C1SCL | | PA15 | 78 |
| | | PM2_BEMFU | PB0 | 32 |
| | | PM2_VBUS | PB1 | 33 |
| | | PM1_BEMFV | PB2 | 34 |
| | SPI1_SCK | | PB3 | 90 |
| | SPI1_MISO | | PB4 | 91 |
| | SPI1_MOSI | | PB5 | 92 |
| | USART1_TX | | PB6 | 93 |
| | USART1_RX | | PB7 | 94 |
| | BOOT0 | FLASH_CS | PB8 | 95 |
| | I2C1SDA | | PB9 | 96 |
| | USART3_TX | | PB10 | 47 |
| | USART3_RX | | PB11 | 50 |
| | | TIM1_BKIN | PB12 | 51 |
| | | PM1_PWM_UL | PB13 | 52 |
| | | PM1_PWM_VL | PB14 | 53 |
| | | PM1_PWM_WL | PB15 | 54 |
| | | PM1_VTEMP | PC0 | 15 |
| | | PM1_AMPU | PC1 | 16 |
| | | PM1_AMPV | PC2 | 17 |
| | | PM1_AMPW | PC3 | 18 |
| | | PM1_BEMFW | PC4 | 30 |
| | | PM1_BEMFU | PC5 | 31 |
| SERVO1 | ST1_PUL | PM2_PWM_UH | PC6 | 65 |
| SERVO2 | ST2_PUL | PM2_PWM_VH | PC7 | 66 |
| | | PM2_PWM_WH | PC8 | 67 |
| | | OUTPUT2 | PC9 | 68 |
| | | PM2_PWM_UL | PC10 | 79 |
| | | PM2_PWM_VL | PC11 | 80 |
| | | PM2_PWM_WL | PC12 | 81 |
| | | PM1_CTRL_SD | PC13 | 7 |
| | | | | 8 |
| | | | | 9 |

PA0/WKUP1/TIM2_CH1/TIM5_CH1/USART2_CTS/COMP1_OUT/TIM8_BKIN/TIM8_ETR/TIM2_ETR/ADC12_IN1/COMP1_INM/COMP3_INP/RTC_TAMP2
PA1/RTC_REFIN/TIM2_CH2/TIM5_CH2/USART2_RTS_DE/_TIM15_CH1N/ADC12_IN2/COMP1_INP/OPAMP1_VINP/OPAMP3_VINP/OPAMP6_VINM
PA2/WKUP4/TIM2_CH3/TIM5_CH3/USART2_TX/COMP2_OUT/TIM15_CH1/QUADSPI1_BK1_NCS/LPUART1_TX/UCPD1_FRSTX/ADC1_IN3/COMP2_INM/OPAMP1_VOUT/LSCO
PA3/TIM2_CH4/TIM5_CH4/SAI1_CK1/USART1_RX/TIM15_CH2/QUADSPI1_CLK/LPUART1_RX/SAI1_MCLK_A/ADC1_IN4/COMP2_INP/OPAMP1_VINM/OPAMP1_VINP/OPAMP5_VINM
PA4/TIM3_CH2/SPI1_NSS/SPI3_NSS/I2S3_WS/USART2_CK/SAI1_FS_B/ADC2_IN17/DAC1_OUT1/COMP1_INM
PA5/TIM2_CH1/TIM2_ETR/SPI1_SCK/UCPD1_FRSTX/ADC2_IN13/DAC1_OUT2/COMP2_INM/OPAMP2_VINM
PA6/TIM16_CH1/TIM3_CH1/TIM8_BKIN/SPI1_MISO/TIM1_BKIN/COMP1_OUT/QUADSPI1_BK1_IO3/LPUART1_CTS/ADC2_IN3/DAC2_OUT1/OPAMP2_VOUT
PA7/TIM17_CH1/TIM3_CH2/TIM8_CH1N/SPI1_MOSI/TIM1_CH1N/COMP2_OUT/QUADSPI1_BK1_IO2/UCPD1_FRSTX/ADC2_IN4/COMP2_INP/OPAMP1_VINP/OPAMP2_VINP
PA8/MCO/ I2C3_SCL/I2C2_SDA/I2S2_MCK/TIM1_CH1/USART1_CK/COMP7_OUT/TIM4_ETR/FDCAN3_RX/SAI1_CK2/HRTIM1_CHA1/SAI1_SCK_A/ADC5_IN1/OPAMP5_VOUT
PA9/I2C3_SMBA/I2C2_SCL/ I2S3_MCK/TIM1_CH2/USART1_TX/OMP5_OUT/TIM15_BKIN/TIM2_CH3/HRTIM1_CHA2/SAI1_FS_A/ADC5_IN2/UCPD1_DBCC1
PA10/TIM17_BKIN/USB_CRS_SYNC/I2C2_SMBA/SPI2_MISO/TIM1_CH3/USART1_RX/COMP6_OUT/TIM2_CH4/TIM8_BKIN/ SAI1_D1/HRTIM1_CHB1/SAI1_SD_A/UCPD1_DBCC2/PVD_IN
PA11/SPI2_MOSI/I2S2_SD/TIM1_CH1N/USART1_CTS/COMP1_OUT/FDCAN1_RX/TIM4_CH1/TIM1_CH4/TIM1_BKIN2/HRTIM1_CHB2/USB_DM
PA12/TIM16_CH1/I2SCKIN/TIM1_CH2N/USART1_RTS_DE/COMP2_OUT/FDCAN1_TX/TIM4_CH2/TIM1_ETR/HRTIM1_FLT1/USB_DP
PA13/SWDIO-JTMS/TIM16_CH1N/I2C4_SCL/ I2C1_SCL/IR_OUT/USART3_CTS/TIM4_CH3/SAI1_SD_B
PA14/SWCLK-JTCK/LPTIM1_OUT/I2C4_SMBA/I2C1_SDA/TIM8_CH2/TIM1_BKIN/USART2_TX/SAI1_FS_B
PA15/JTDI/TIM2_CH1/TIM8_CH1/I2C1_SCL/SPI1_NSS/SPI3_NSS/I2S3_WS/USART2_RX/UART4_RTS_DE/TIM1_BKIN/FDCAN3_TX/HRTIM1_FLT2/TIM2_ETR

PB0/TIM3_CH3/TIM8_CH2N/TIM1_CH2N/QUADSPI1_BK1_IO1/HRTIM1_FLT5/UCPD1_FRSTX/ADC3_IN12/ADC1_IN15/COMP4_INP/OPAMP2_VINP/OPAMP3_VINP
PB1/TIM3_CH4/TIM8_CH3N/TIM1_CH3N/COMP4_OUT/QUADSPI1_BK1_IO0/LPUART1_RTS_DE/HRTIM1_SCOUT/ADC3_IN1/ADC1_IN12/COMP1_INP/OPAMP3_VOUT/OPAMP6_VINM
PB2/RTC_OUT2/LPTIM1_OUT/TIM5_CH1/TIM20_CH1/I2C3_SMBA/QUADSPI1_BK2_IO1/HRTIM1_SCIN/ADC2_IN12/COMP4_INM/OPAMP3_VINM
PB3/JTDO-TRACESWO/TIM2_CH2/TIM4_ETR/UCPD1_CRS_SYNC/TIM8_CH1N/SPI1_SCK/SPI3_SCK/I2S3_CK/USART2_TX/TIM3_ETR/FDCAN3_RX/HRTIM1_SCOUT/HRTIM1_EEV9/SAI1_SCK_B
PB4/JTRST/ TIM16_CH1/TIM3_CH1/TIM8_CH2N/SPI1_MISO/SPI3_MISO/USART2_RX/UART5_RTS_DE/TIM17_BKIN/FDCAN3_TX/HRTIM1_EEV7/SAI1_MCLK_B/UCPD1_CC2
PB5/TIM16_BKIN/TIM3_CH2/TIM8_CH3N/I2C1_SMBA/SPI1_MOSI/SPI3_MOSI/I2S3_SD/USART2_CK/I2C3_SDA/FDCAN2_RX/TIM17_CH1/LPTIM1_IN1/SAI1_SD_B/HRTIM1_EEV6/UART5_CTS
PB6/TIM16_CH1N/TIM4_CH1/TIM8_CH1/TIM8_ETR/USART1_TX/COMP4_OUT/FDCAN2_TX/TIM8_BKIN2/LPTIM1_ETR/HRTIM1_SCIN/HRTIM1_EEV4/SAI1_FS_B
PB7/TIM17_CH1N/TIM4_CH2/I2C4_SDA/I2C1_SDA/TIM8_BKIN/USART1_RX/COMP3_OUT/TIM3_CH4/LPTIM1_IN2/FMC_NL/HRTIM1_EEV3/UART4_CTS
PB8/BOOT0/TIM16_CH1/TIM4_CH3/SAI1_CK1/I2C1_SCL/USART3_RX/COMP1_OUT/FDCAN1_RX/TIM8_CH2/TIM1_BKIN/HRTIM1_EEV8/SAI1_MCLK_A
PB9/TIM17_CH1/TIM4_CH4/SAI1_D2/I2C1_SDA/IR_OUT/USART3_TX/COMP2_OUT/FDCAN1_TX/TIM8_CH3/TIM1_CH3N/HRTIM1_EEV5/SAI1_FS_A
PB10/TIM2_CH3/USART3_TX/LPUART1_RX/QUADSPI1_CLK/TIM1_BKIN/HRTIM1_FLT3/SAI1_SCK_A/COMP5_INM/OPAMP3_VINM/OPAMP4_VINM
PB11/TIM2_CH4/USART3_RX/LPUART1_TX/QUADSPI1_BK1_NCS/HRTIM1_FLT4/ADC12_IN14/COMP6_INP/OPAMP4_VINP/OPAMP6_VOUT
PB12/TIM5_ETR/I2C2_SMBA/SPI2_NSS/I2S2_WS/TIM1_BKIN/USART3_CK/LPUART1_RTS_DE/FDCAN2_RX/HRTIM1_CHC1/ADC4_IN3/ADC1_IN11/COMP7_INM/OPAMP4_VOUT/OPAMP6_VINP
PB13/SPI2_SCK/I2S2_CK/TIM1_CH1N/USART3_CTS/LPUART1_CTS/FDCAN2_TX/HRTIM1_CHC2/ADC3_IN5/COMP5_INP/OPAMP3_VINP/OPAMP4_VINP/OPAMP6_VINP
PB14/TIM15_CH1/SPI2_MISO/TIM1_CH2N/USART3_RTS_DE/COMP4_OUT/HRTIM1_CHD1/ADC4_IN4/ADC1_IN5/COMP7_INP/OPAMP2_VINP/OPAMP5_VINP
PB15/RTC_REFIN/TIM15_CH2/TIM15_CH1N/COMP3_OUT/TIM1_CH3N/SPI2_MOSI/I2S2_SD/HRTIM1_CHD2/ADC4_IN5/ADC2_IN15/COMP6_INM/OPAMP5_VINM

PC0/LPTIM1_IN1/TIM1_CH1/LPUART1_RX/ADC12_IN6/COMP3_INM
PC1/LPTIM1_OUT/TIM1_CH2/LPUART1_TX/QUADSPI1_BK2_IO0/SAI1_SD_A/ADC12_IN7/COMP3_INP
PC2/LPTIM1_IN2/TIM1_CH3/COMP3_OUT/TIM20_CH2/QUADSPI1_BK2_IO1/ADC12_IN8
PC3/LPTIM1_ETR/TIM1_CH4/ SAI1_D1/TIM1_BKIN2/QUADSPI1_BK2_IO2/SAI1_SD_A/ADC12_IN9/OPAMP5_VINP
PC4/TIM1_ETR/ I2C2_SCL/USART1_TX/QUADSPI1_BK2_IO3/ADC2_IN5
PC5/WKUP5/TIM15_BKIN/SAI1_D3/TIM1_CH4N/USART1_RX/HRTIM1_EEV10/ADC2_IN11/OPAMP1_VINM/OPAMP2_VINM
PC6/TIM3_CH1/HRTIM1_EEV10/TIM8_CH1/I2S2_MCK/COMP6_OUT/I2C4_SCL/HRTIM1_CHF1
PC7/TIM3_CH2/HRTIM1_FLT5/TIM8_CH2/I2S3_MCK/COMP5_OUT/I2C4_SDA/HRTIM1_CHF2
PC8/TIM3_CH3/HRTIM1_CHE1/TIM8_CH3/TIM20_CH3/COMP7_OUT/I2C3_SCL
PC9/TIM3_CH4/HRTIM1_CHE2/TIM8_CH4/ I2SCKIN/TIM8_BKIN2/I2C3_SDA
PC10/TIM8_CH1N/UART4_TX/SPI3_SCK/I2S3_CK/USART3_TX/HRTIM1_FLT6
PC11/HRTIM1_EEV2/TIM8_CH2N/UART4_RX/SPI3_MISO/USART3_RX/I2C3_SDA
PC12/TIM5_CH2/HRTIM1_EEV1/TIM8_CH3N/UART5_TX/SPI3_MOSI/I2S3_SD/USART3_CK/UCPD1_FRSTX
PC13/WKUP2/TIM1_BKIN/TIM1_CH1N/TIM8_CH4N/RTC_TAMP1/RTC_TS/RTC_OUT1
PC14/OSC32_IN
PC15/OSC32_OUT

STM32G474VET6

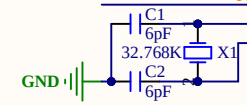


| | |
|---|---|
| Title: DMG474.PrjPcb | |
| Author: ALIENTEK | Size: A4 |
| Date: 2023/8/8 | File: MCU_Port_1.SchDoc |
| Revision: V1.0 | Version: V1.0 |

正点原子

# MCU_DEF

U1B

| | | | |
|---|---|---|---|
| GBC_LED | INPUT1 | PD0 | 82 |
| GBC_KEY | INPUT2 | PD1 | 83 |
| | TIM8_BKIN | PD2 | 84 |
| | PM2_HALLU | PD3 | 85 |
| | PM2_HALLV | PD4 | 86 |
| USART2_TX | | PD5 | 87 |
| USART2_RX | | PD6 | 88 |
| | PM2_HALLW | PD7 | 89 |
| LCD_PWR | | PD8 | 55 |
| LCD_RST | | PD9 | 56 |
| LCD_CS | | PD10 | 57 |
| | PM2_CTRL_SD | PD11 | 58 |
| | PM2_ENCA | PD12 | 59 |
| | PM2_ENCB | PD13 | 60 |
| | PM2_ENCZ | PD14 | 61 |
| | INPUT3 | PD15 | 62 |
| LED0 | | PE0 | 97 |
| LED1 | | PE1 | 98 |
| | OUTPUT3 | PE2 | 1 |
| | OUTPUT4 | PE3 | 2 |
| | PM1_ENCZ | PE4 | 3 |
| | ST2_DIR | PE5 | 4 |
| | ST2_EN | PE6 | 5 |
| | PM2_AMPU | PE7 | 38 |
| | PM2_AMPV | PE8 | 39 |
| | PM2_VTEMP | PE9 | 40 |
| | PM2_AMPW | PE10 | 41 |
| | OUTPUT1 | PE11 | 42 |
| KEY0 | | PE12 | 43 |
| KEY1 | | PE13 | 44 |
| KEY2 | | PE14 | 45 |
| | INPUT4 | PE15 | 46 |
| | | | 12 |
| | | | 13 |
| | ST1_DIR | PF2 | 19 |
| | ST1_EN | PF9 | 10 |
| BEEP | | PF10 | 11 |
| RESET | | | 14 |

PD0/TIM8_CH4N/FDCAN1_RX
PD1/TIM8_CH4/TIM8_BKIN2/FDCAN1_TX
PD2/TIM3_ETR/TIM8_BKIN/UART5_RX
PD3/TIM2_CH1/TIM2_ETR/USART2_CTS/QUADSPI1_BK2_NCS/FMC_CLK
PD4/TIM2_CH2/USART2_RTS_DE/QUADSPI1_BK2_IO0/FMC_NOE
PD5/USART2_TX/QUADSPI1_BK2_IO1/FMC_NWE
PD6/TIM2_CH4/ SAI1_D1/USART2_RX/QUADSPI1_BK2_IO2/FMC_NWAIT/SAI1_SD_A
PD7/TIM2_CH3/USART2_CK/QUADSPI1_BK2_IO3/FMC_NCE/FMC_NE1
PD8/USART3_TX/FMC_D13/ADC4_IN12/ADC5_IN12/OPAMP4_VINM
PD9/USART3_RX/FMC_D14/ADC4_IN13/ADC5_IN13/OPAMP6_VINP
PD10/USART3_CK/FMC_D15/ADC345_IN7/COMP6_INM
PD11/TIM5_ETR/I2C4_SMBA/USART3_CTS/FMC_A16/ADC345_IN8/COMP6_INP/OPAMP4_VINP
PD12/TIM4_CH1/USART3_RTS_DE/FMC_A17/ADC345_IN9/COMP5_INP/OPAMP5_VINP
PD13/TIM4_CH2/FMC_A18/ADC345_IN10/COMP5_INM
PD14/TIM4_CH3/ADC345_IN11/COMP7_INP/OPAMP2_VINP
PD15/TIM4_CH4/SPI2_NSS/COMP7_INM

PE0/TIM4_ETR/TIM20_CH4N/TIM16_CH1/TIM20_ETR/USART1_TX/FMC_NBL0
PE1/TIM17_CH1/TIM20_CH4/USART1_RX/FMC_NBL1
PE2/TRACECK/TIM3_CH1/SAI1_CK1/ SPI4_SCK/TIM20_CH1/FMC_A23/SAI1_MCLK_A
PE3/TRACED0/TIM3_CH2/SPI4_NSS/TIM20_CH2/FMC_A19/SAI1_SD_B
PE4/TRACED1/TIM3_CH3/ SAI1_D2/SPI4_NSS/TIM20_CH1N/FMC_A20/SAI1_FS_A
PE5/TRACED2/TIM3_CH4/SAI1_CK2/SPI4_MISO/TIM20_CH2N/FMC_A21/SAI1_SCK_A
PE6/TRACED3/WKUP3/SAI1_D1/SPI4_MOSI/TIM20_CH3N/FMC_A22/SAI1_SD_A/RTC_TAMP3
PE7/TIM1_ETR/ FMC_D4/SAI1_SD_B/ADC3_IN4/COMP4_INP
PE8/TIM5_CH3/TIM1_CH1N/FMC_D5/SAI1_SCK_B/ADC345_IN6/COMP4_INM
PE9/TIM5_CH4/TIM1_CH1/ FMC_D6/SAI1_FS_B/ADC3_IN2
PE10/TIM1_CH2N/QUADSPI1_CLK/FMC_D7/SAI1_MCLK_B/ADC345_IN14
PE11/TIM1_CH2/SPI4_NSS/QUADSPI1_BK1_NCS/FMC_D8/ADC345_IN15
PE12/TIM1_CH3N/SPI4_SCK/QUADSPI1_BK1_IO0/FMC_D9/ADC345_IN16
PE13/TIM1_CH3/SPI4_MISO/QUADSPI1_BK1_IO1/FMC_D10/ADC3_IN3
PE14/TIM1_CH4/SPI4_MOSI/TIM1_BKIN2/QUADSPI1_BK1_IO2/FMC_D11/ADC4_IN1
PE15/TIM1_BKIN/TIM1_CH4N/USART3_RX/QUADSPI1_BK1_IO3/FMC_D12/ADC4_IN2

PF0/OSC_IN/I2C2_SDA/SPI2_NSS/I2S2_WS/TIM1_CH3N/ADC1_IN10
PF1/OSC_OUT/SPI2_SCK/I2S2_CK/COMP3_INM/ ADC2_IN10
PF2/TIM20_CH3/I2C2_SMBA/FMC_A2
PF9/TIM20_BKIN/TIM15_CH1/SPI2_SCK/TIM5_CH4/QUADSPI1_BK1_IO1/FMC_A25/SAI1_FS_B
PF10/TIM20_BKIN2/TIM15_CH2/SPI2_SCK/QUADSPI1_CLK/FMC_A0/ SAI1_D3

PG10/NRST/MCO

STM32G474VET6

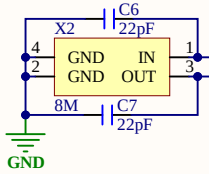


# MCU_POWER

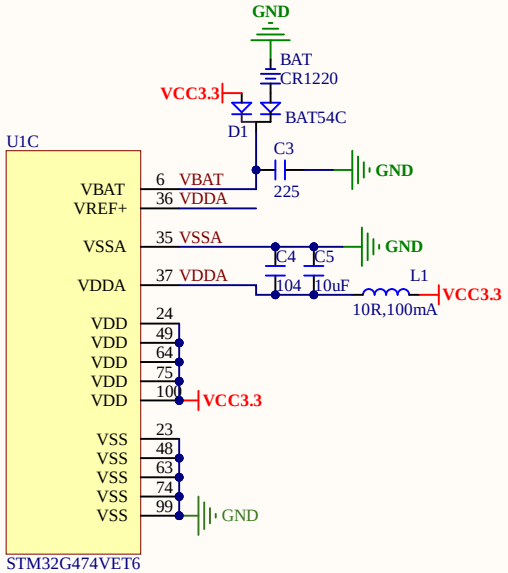


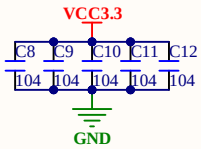


# SWD

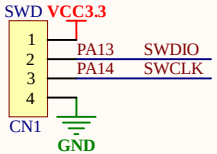


# BOOT

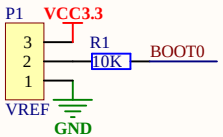


# RESET

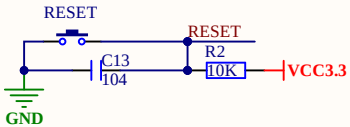


| | |
|---|---|
| Title: DMG474.PrjPcb | |
| Author: ALIENTEK | Size: A4 |
| Date: 2023/8/8 | File: MCU_Port_2.SchDoc |
| Revision: V1.0 | Version: V1.0 |

正点原子

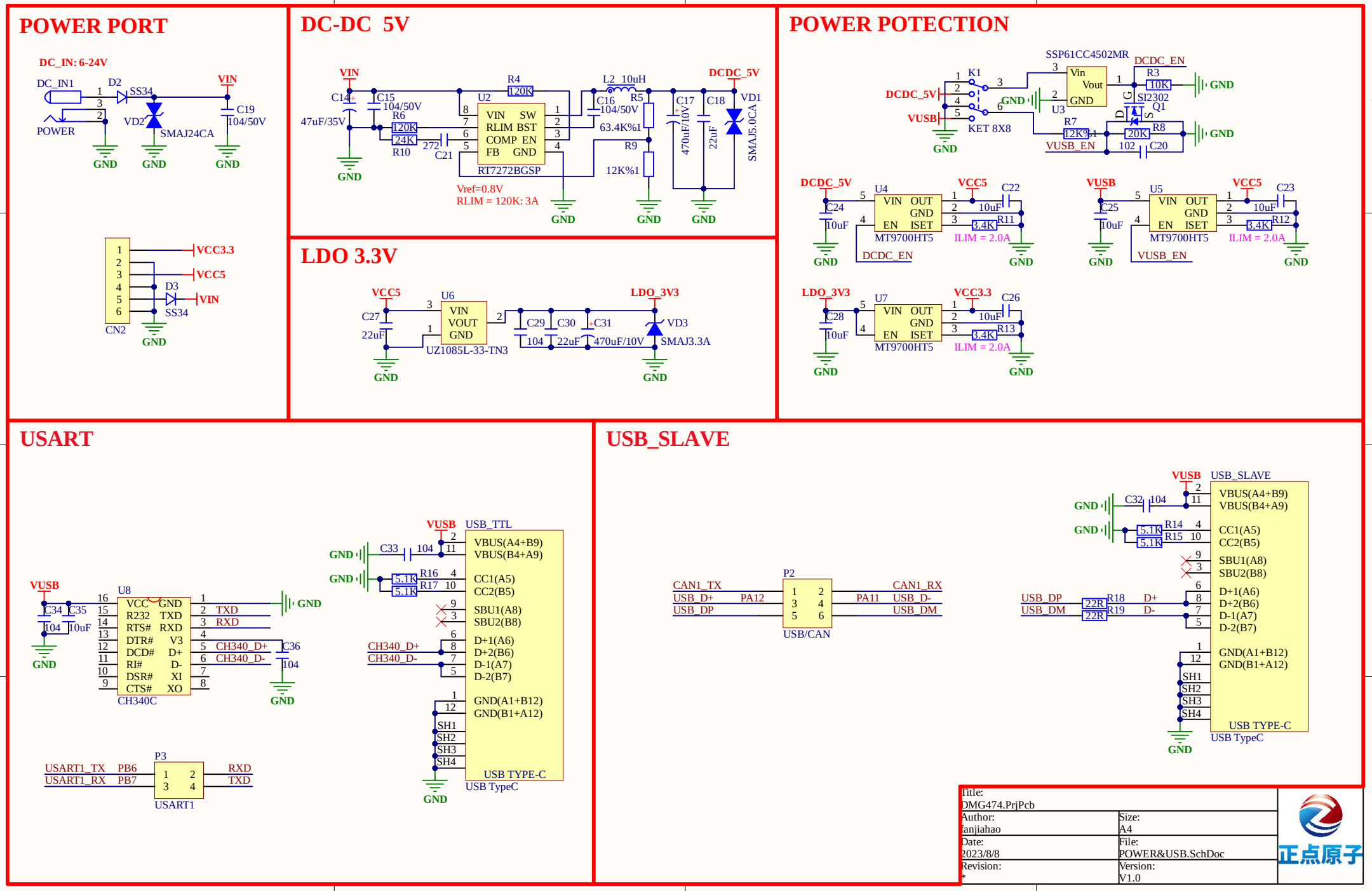
POWER PORT
DC_IN: 6-24V
DC_IN1
D2
SS34
VIN
C19
104/50V
POWER
VD2
SMAJ24CA
GND
VCC3.3
VCC5
D3
SS34
CN2
DC-DC 5V
VIN
C14
47uF/35V
C15
104/50V
R6
120K
24K
R10
272
C21
R4
120K
U2
VIN SW
RLIM BST
COMP EN
FB GND
RT7272BGSP
Vref=0.8V
RLIM = 120K: 3A
L2 10uH
C16
104/50V
R5
63.4K%1
R9
12K%1
C17
470uF/10V
C18
22uF
DCDC_5V
VD1
SMAJ5.0CA
LDO 3.3V
VCC5
C27
22uF
U6
VIN
VOUT
GND
UZ1085L-33-TN3
C29
104
C30
22uF
C31
470uF/10V
LDO_3V3
VD3
SMAJ3.3A
POWER POTECTION
SSP61CC4502MR
K1
DCDC_5V
VUSB
KET 8X8
Vin
Vout
GND
U3
DCDC_EN
R3
10K
SI2302
Q1
R7
12K%1
R8
20K
VUSB_EN
102
C20
U4
VIN OUT
GND
EN ISET
MT9700HT5
C22
10uF
R11
3.4K
ILIM = 2.0A
C24
10uF
U5
C23
R12
C25
U7
C26
R13
C28
USART
VUSB
U8
VCC GND
R232 TXD
RTS# RXD
DTR# V3
DCD# D+
RI# D-
DSR# XI
CTS# XO
CH340C
C34
C35
104
10uF
TXD
RXD
CH340_D+
CH340_D-
C36
104
P3
USART1_TX PB6
USART1_RX PB7
RXD
TXD
USART1
USB_TTL
C33
R16
R17
5.1K
VBUS(A4+B9)
VBUS(B4+A9)
CC1(A5)
CC2(B5)
SBU1(A8)
SBU2(B8)
D+1(A6)
D+2(B6)
D-1(A7)
D-2(B7)
GND(A1+B12)
GND(B1+A12)
SH1
SH2
SH3
SH4
USB TYPE-C
USB TypeC
USB_SLAVE
CAN1_TX
USB_D+
USB_DP
PA12
P2
PA11
CAN1_RX
USB_D-
USB_DM
USB/CAN
USB_DP
USB_DM
R18
R19
22R
D+
D-
USB TYPE-C
USB TypeC
Title:
DMG474.PrjPcb
Author:
fanjiahao
Size:
A4
Date:
2023/8/8
File:
POWER&USB.SchDoc
Revision:
*
Version:
V1.0
正点原子

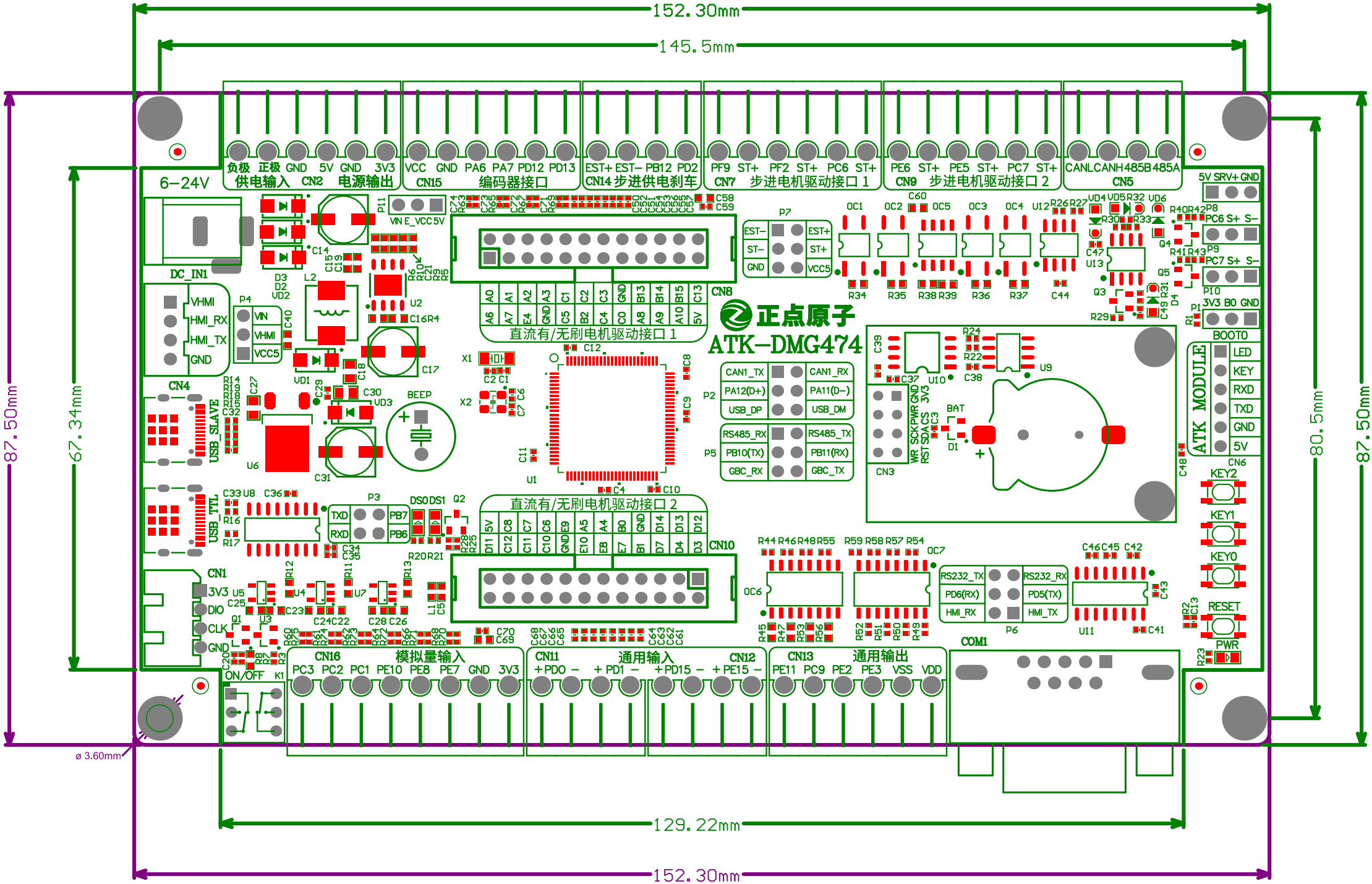
152.30mm
145.5mm
87.50mm
67.34mm
80.5mm
87.50mm
129.22mm
152.30mm
ø 3.60mm
6-24V
DC_IN1
VHMI
HMI_RX
HMI_TX
GND
CN4
USB_SLAVE
USB_TTL
CN1
3V3
DIO
CLK
GND
ON/OFF
K1
负极 正极 GND 5V GND 3V3
供电输入 CN2 电源输出
VCC GND PA6 PA7 PD12 PD13
CN15 编码器接口
EST+ EST- PB12 PD2
CN14 步进供电刹车
PF9 ST+ PF2 ST+ PC6 ST+
CN7 步进电机驱动接口 1
PE6 ST+ PE5 ST+ PC7 ST+
CN9 步进电机驱动接口 2
CANL CANH 485B 485A
CN5
CN8
直流有/无刷电机驱动接口 1
正点原子
ATK-DMG474
CN10
直流有/无刷电机驱动接口 2
CN16 模拟量输入
PC3 PC2 PC1 PE10 PE8 PE7 GND 3V3
CN11 通用输入
+PD0 - + PD1 - +PD15 - +PE15 -
CN12
CN13 通用输出
PE11 PC9 PE2 PE3 VSS VDD
COM1
ATK MODULE
LED
KEY
RXD
TXD
GND
5V
CN6
KEY2
KEY1
KEY0
RESET
PWR
BOOT0
5V SRV+ GND
PC6 S+ S-
PC7 S+ S-
3V3 B0 GND
BEEP
BAT
CN3
P2
CAN1_TX CAN1_RX
PA12(D+) PA11(D-)
USB_DP USB_DM
P5
RS485_RX RS485_TX
PB10(TX) PB11(RX)
GBC_RX GBC_TX
P6
RS232_TX RS232_RX
PD6(RX) PD5(TX)
HMI_RX HMI_TX
P3
TXD PB7
RXD PB6
P7
EST- EST+
ST- ST+
GND VCC5
P4
VIN
VHMI
VCC5