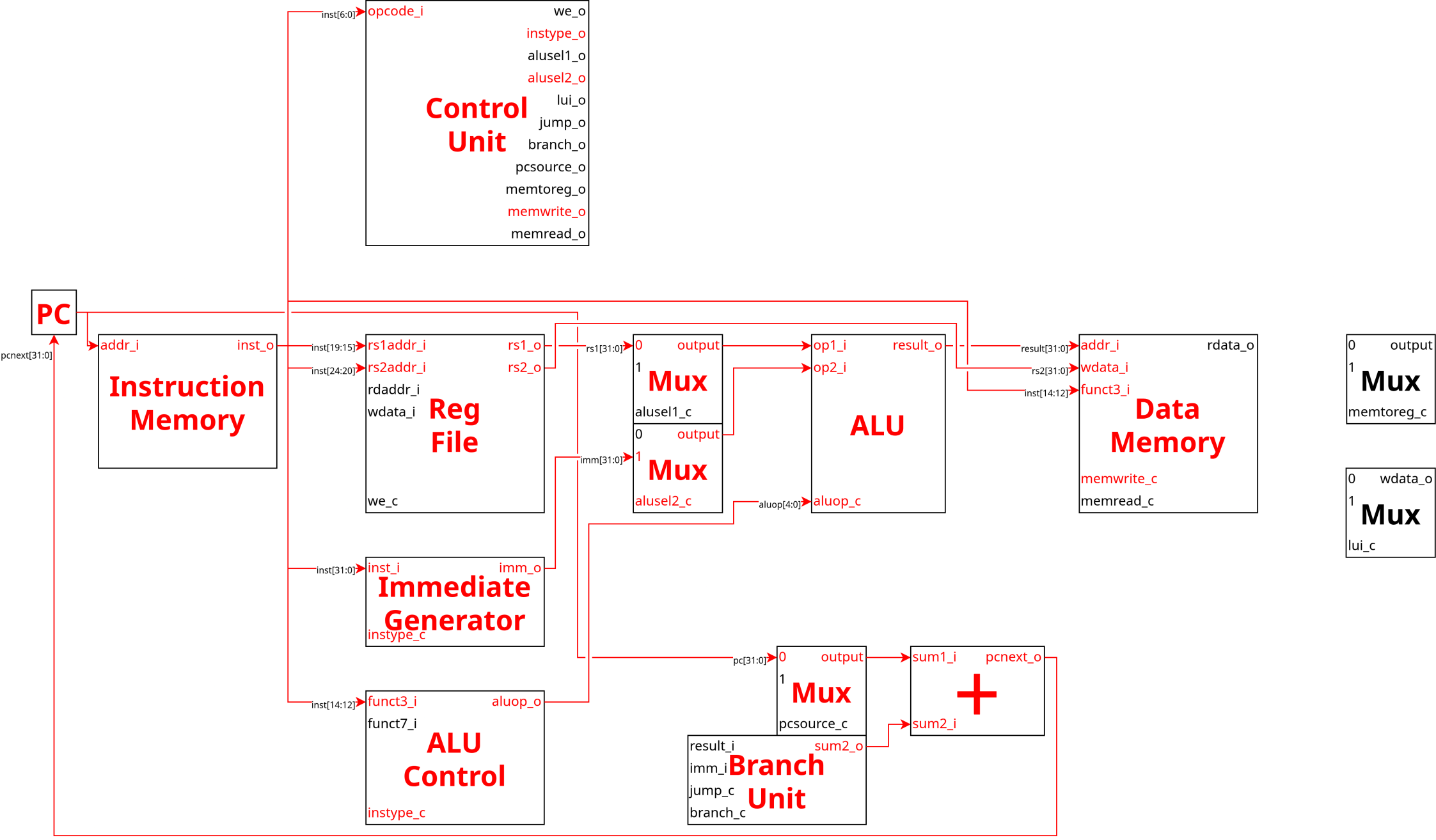
Control Unit
opcode_i
we_o
instype_o
alusel1_o
alusel2_o
lui_o
jump_o
branch_o
pcsource_o
memtoreg_o
memwrite_o
memread_o
inst[6:0]
PC
pcnext[31:0]
Instruction Memory
addr_i
inst_o
inst[19:15]
inst[24:20]
Reg File
rs1addr_i
rs2addr_i
rdaddr_i
wdata_i
we_c
rs1_o
rs2_o
rs1[31:0]
imm[31:0]
Mux
0
1
output
alusel1_c
Mux
0
1
output
alusel2_c
ALU
op1_i
op2_i
aluop_c
result_o
aluop[4:0]
result[31:0]
rs2[31:0]
inst[14:12]
Data Memory
addr_i
wdata_i
funct3_i
memwrite_c
memread_c
rdata_o
Mux
0
1
output
memtoreg_c
Mux
0
1
wdata_o
lui_c
inst[31:0]
Immediate Generator
inst_i
instype_c
imm_o
inst[14:12]
ALU Control
funct3_i
funct7_i
instype_c
aluop_o
pc[31:0]
Mux
0
1
output
pcsource_c
Branch Unit
result_i
imm_i
jump_c
branch_c
sum2_o
sum1_i
sum2_i
pcnext_o
+