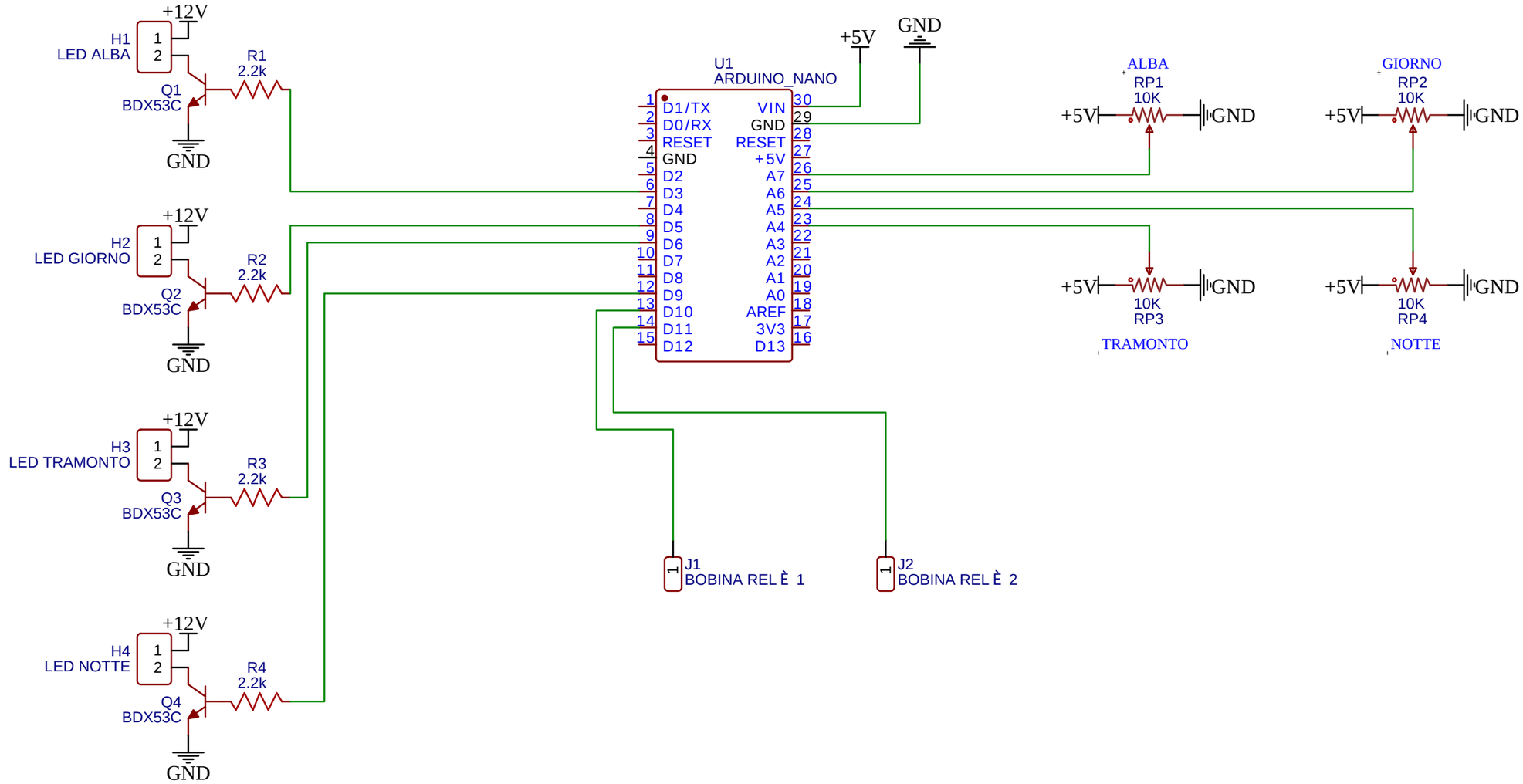

TITLE: Natalino 2019		REV: 1.0
EasyEDA	Company: Leonardo Gemin	Sheet: 1/1
	Date: 2024-10-08 Drawn By: Leonardo Gemin	