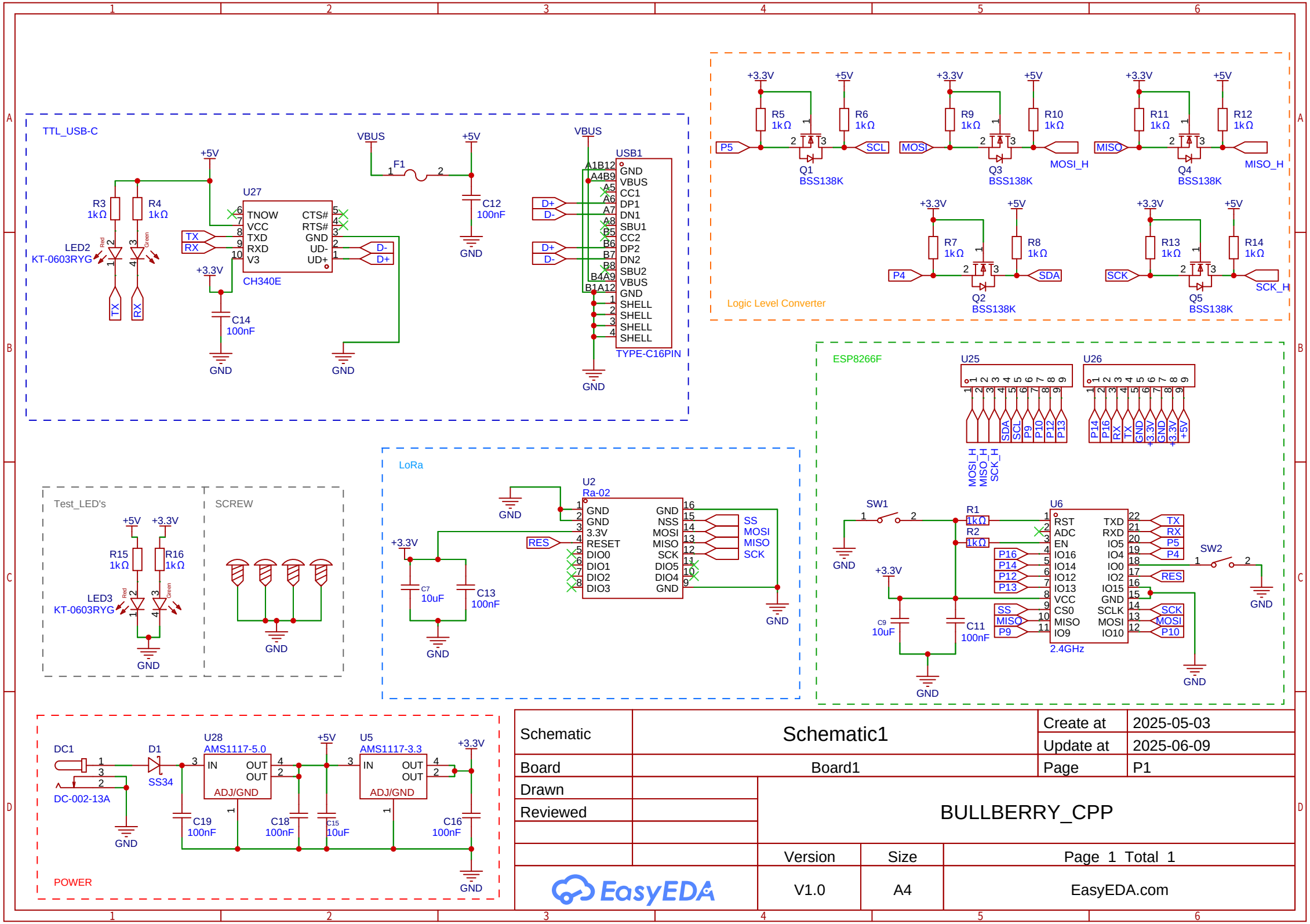
TTL_USB-C
U27
CH340E
TNOW
VCC
TXD
RXD
V3
CTS#
RTS#
GND
UD-
UD+
TX
RX
D-
D+
R3 1kΩ
R4 1kΩ
LED2
KT-0603RYG
C14 100nF
C12 100nF
F1
VBUS
+5V
+3.3V
GND
USB1
TYPE-C16PIN
A1B12
A4B9
B1A12
B4A9
CC1
DP1
DN1
SBU1
CC2
DP2
DN2
SBU2
SHELL
Logic Level Converter
R5 1kΩ
R6 1kΩ
R7 1kΩ
R8 1kΩ
R9 1kΩ
R10 1kΩ
R11 1kΩ
R12 1kΩ
R13 1kΩ
R14 1kΩ
P5
SCL
P4
SDA
MOSI
MISO
SCK
MOSI_H
MISO_H
SCK_H
Q1 BSS138K
Q2 BSS138K
Q3 BSS138K
Q4 BSS138K
Q5 BSS138K
ESP8266F
U25
U26
SDA
SCL
P9
P10
P12
P13
P14
P16
RX
TX
GND
+3.3V
+5V
SW1
SW2
R1 1kΩ
R2 1kΩ
U6
2.4GHz
RST
ADC
EN
IO16
IO14
IO12
IO13
VCC
CS0
MISO
IO9
TXD
RXD
IO5
IO4
IO0
IO2
IO15
SCLK
MOSI
IO10
RES
C9 10uF
C11 100nF
Test_LED's
R15 1kΩ
R16 1kΩ
LED3
KT-0603RYG
SCREW
LoRa
U2
Ra-02
GND
NSS
3.3V
RESET
DIO0
DIO1
DIO2
DIO3
DIO5
DIO4
SS
C7 10uF
C13 100nF
DC1
DC-002-13A
D1
SS34
U28
AMS1117-5.0
IN
OUT
ADJ/GND
U5
AMS1117-3.3
C19 100nF
C18 100nF
C15 10uF
C16 100nF
POWER
Schematic
Schematic1
Create at
2025-05-03
Update at
2025-06-09
Board
Board1
Page
P1
Drawn
Reviewed
BULLBERRY_CPP
Version
Size
Page 1 Total 1
V1.0
A4
EasyEDA
EasyEDA.com