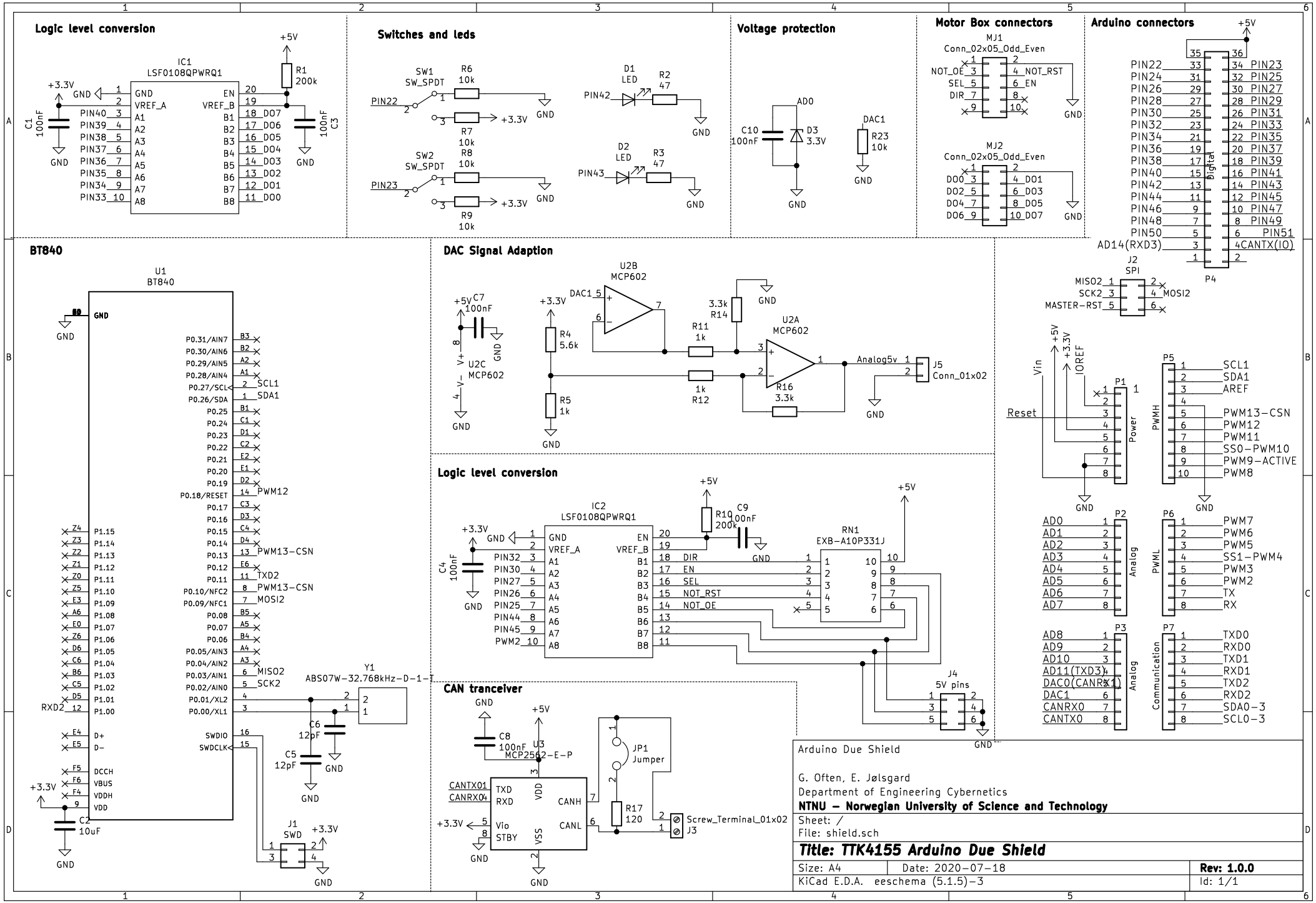
Logic level conversion
IC1
LSF0108QPWRQ1
Switches and leds
SW1
SW_SPDT
SW2
SW_SPDT
D1
LED
D2
LED
Voltage protection
AD0
DAC1
Motor Box connectors
MJ1
Conn_02x05_Odd_Even
MJ2
Conn_02x05_Odd_Even
Arduino connectors
P4
J2
SPI
BT840
U1
BT840
DAC Signal Adaption
U2B
MCP602
U2C
MCP602
U2A
MCP602
J5
Conn_01x02
Logic level conversion
IC2
LSF0108QPWRQ1
RN1
EXB-A10P331J
J4
5V pins
Y1
ABS07W-32.768kHz-D-1-T
J1
SWD
CAN tranceiver
U3
MCP2562-E-P
JP1
Jumper
J3
Screw_Terminal_01x02
P1
Power
P2
Analog
P3
Analog
P5
PWMH
P6
PWML
P7
Communication
Arduino Due Shield
G. Often, E. Jølsgard
Department of Engineering Cybernetics
NTNU – Norwegian University of Science and Technology
Sheet: /
File: shield.sch
Title: TTK4155 Arduino Due Shield
Size: A4
Date: 2020-07-18
Rev: 1.0.0
KiCad E.D.A. eeschema (5.1.5)-3
Id: 1/1