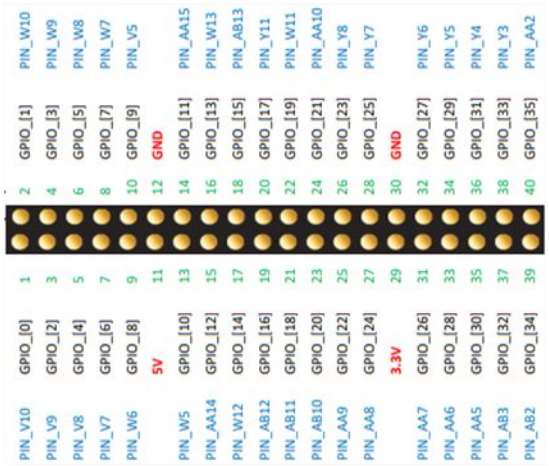

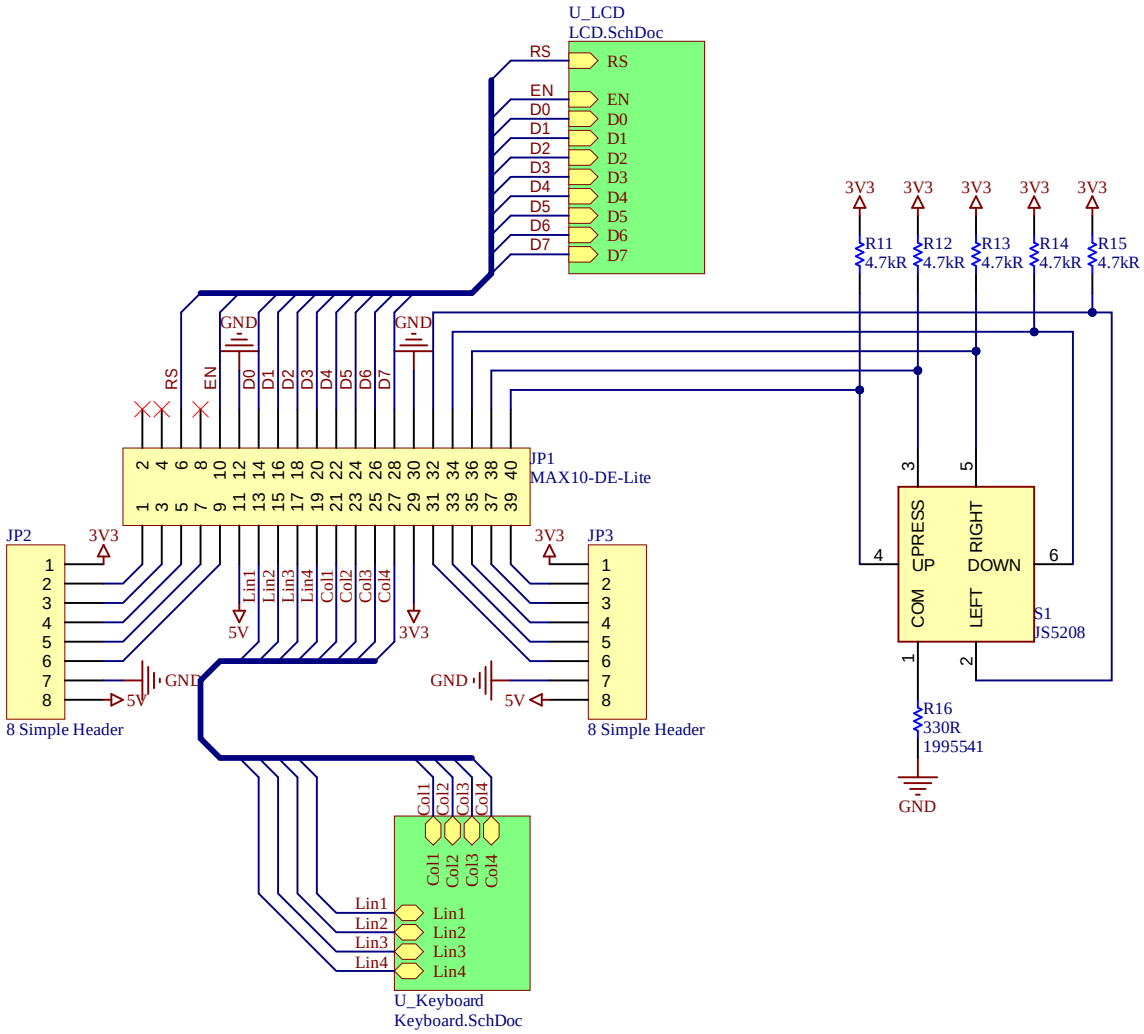

Title: DE10-Lite Expansion Board - Main			
Version: 1 Revision: B		Project: MAX10_LIC.PrjPcb	ISEL Rua Concelheiro Emidio Navarro Nº 1 1959-007 Lisboa Portugal isel@isel.pt www.isel.pt
Size: A4	Sheet: 1 of 3	Author: SAA/PMM	
Date: 26/04/2022	Time: 11:09:19	Checked: SAA/PMM	
File: Main.SchDoc		Approved: SAA/PMM	

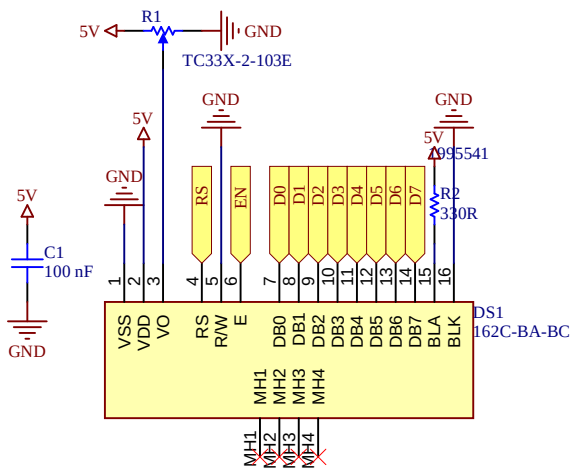

Title: DE10-Lite Expansion Board - LCD			
Version: 1 Revision: B		Project: MAX10_LIC.PrjPcb	ISEL Rua Concelheiro Emidio Navarro Nº 1 1959-007 Lisboa Portugal isel@isel.pt www.isel.pt
Size: A4	Sheet: 2 of 3	Author: SAA/PMM	
Date: 26/04/2022	Time: 11:09:19	Checked: SAA/PMM	
File: LCD.SchDoc		Approved: SAA/PMM	

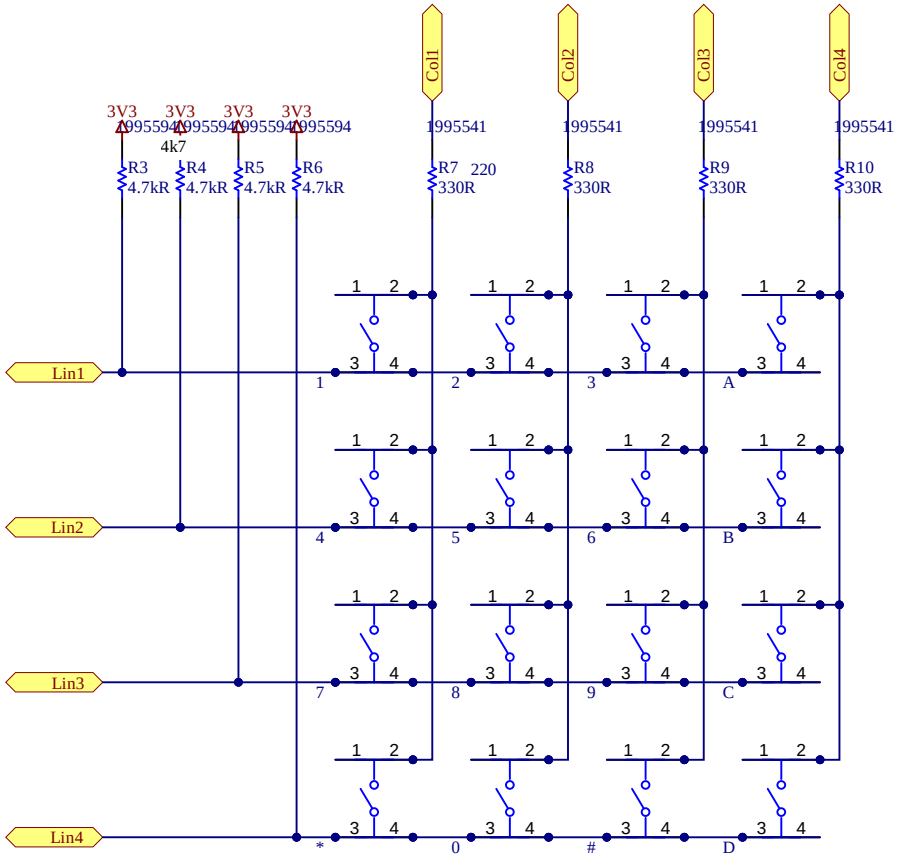

Title: DE10-Lite Expansion Board - Keyboard			
Version: 1 Revision: B		Project: MAX10_LIC.PrjPcb	ISEL Rua Concelheiro Emidio Navarro Nº 1 1959-007 Lisboa Portugal isel@isel.pt www.isel.pt
Size: A4	Sheet: 3 of 3	Author: SAA/PMM	
Date: 26/04/2022	Time: 11:09:20	Checked: SAA/PMM	
File: Keyboard.SchDoc		Approved: SAA/PMM	

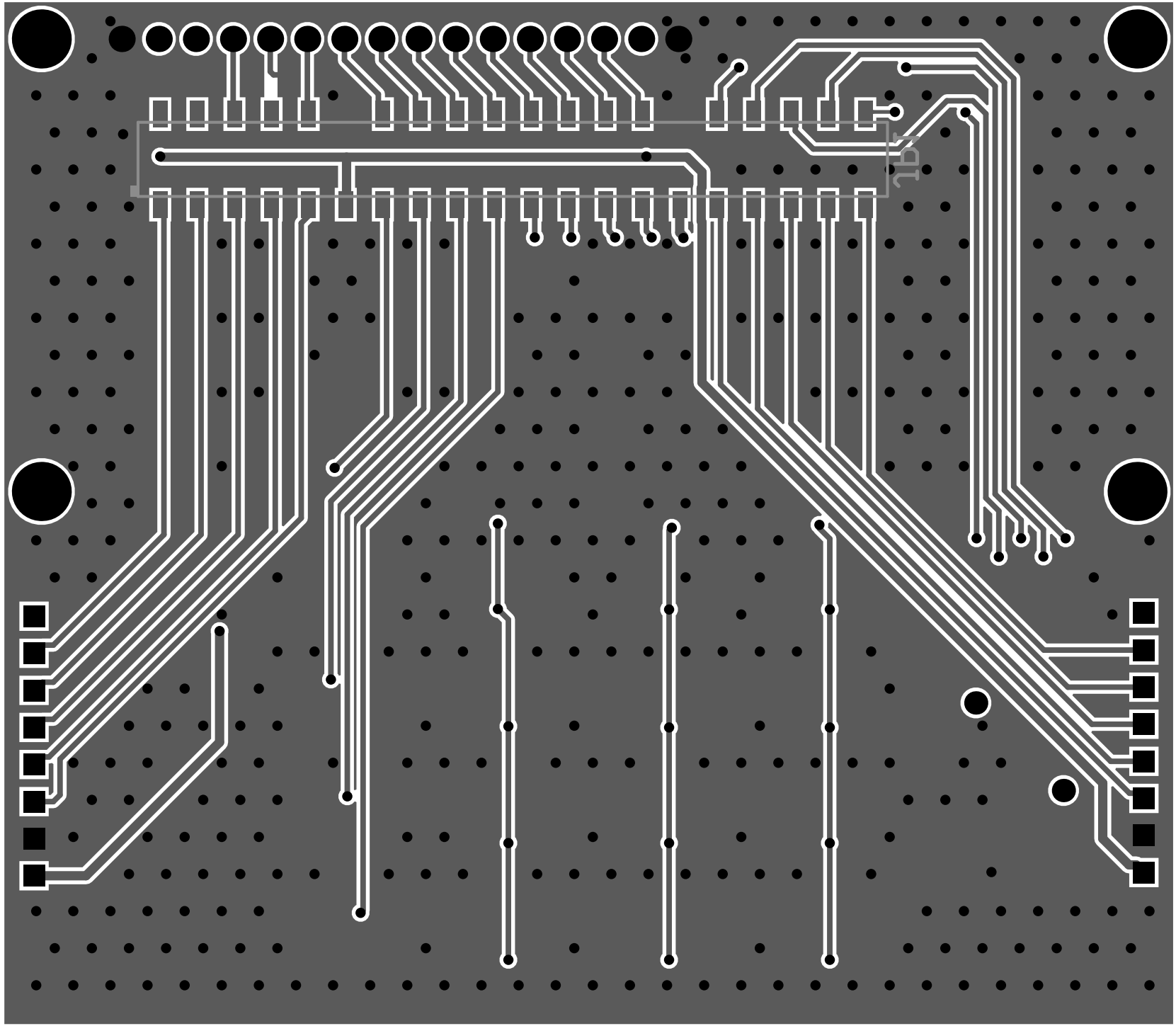

DS1

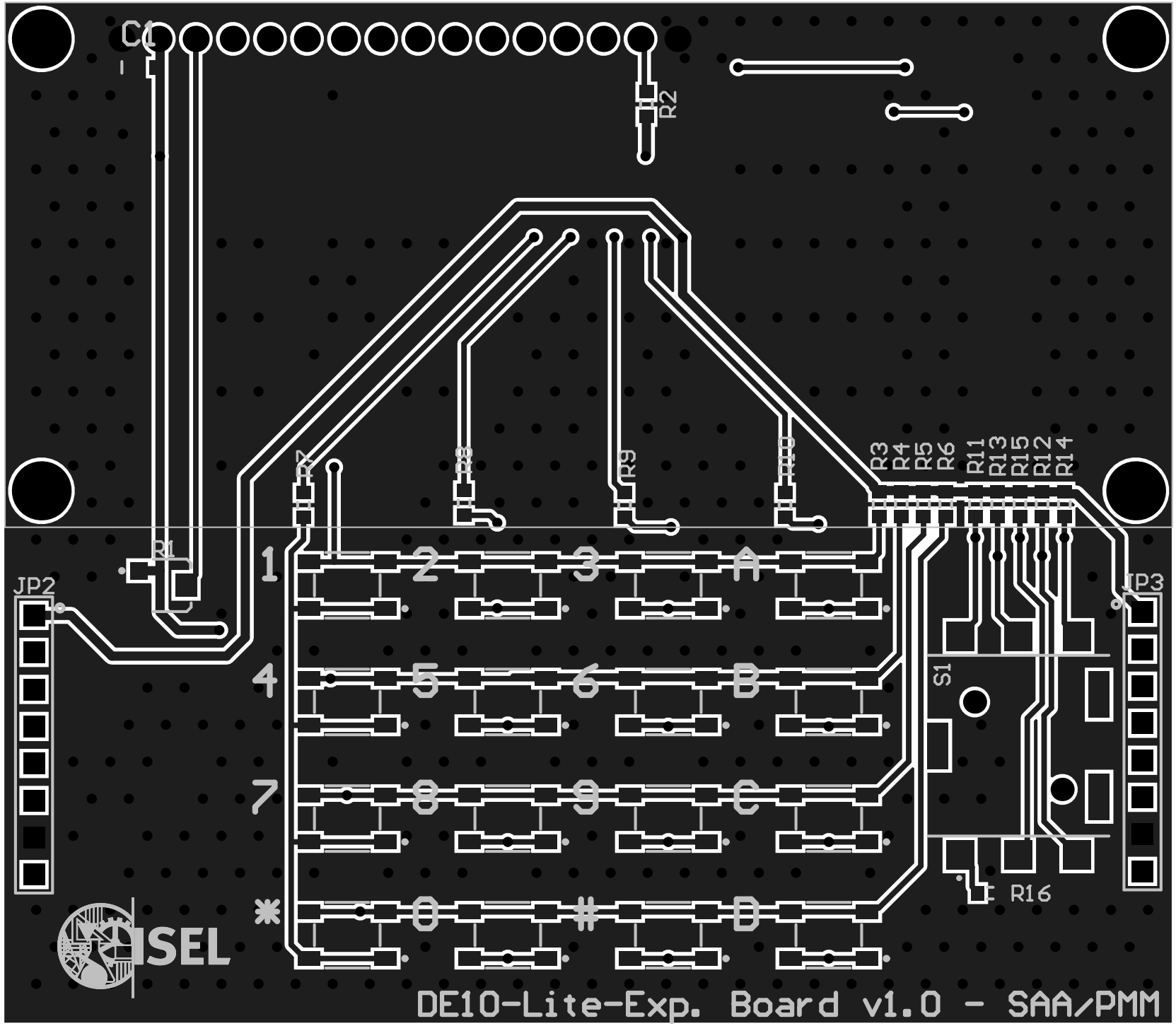
C1
R2
R1
R7
R8
R9
R10
R3
R4
R5
R6
R11
R13
R15
R12
R14
JP2
JP3
S1
R16
1
2
3
A
4
5
6
B
7
8
9
C
*
0
#
D
ISEL
DE10-Lite-Exp. Board v1.0 - SAA/PMM