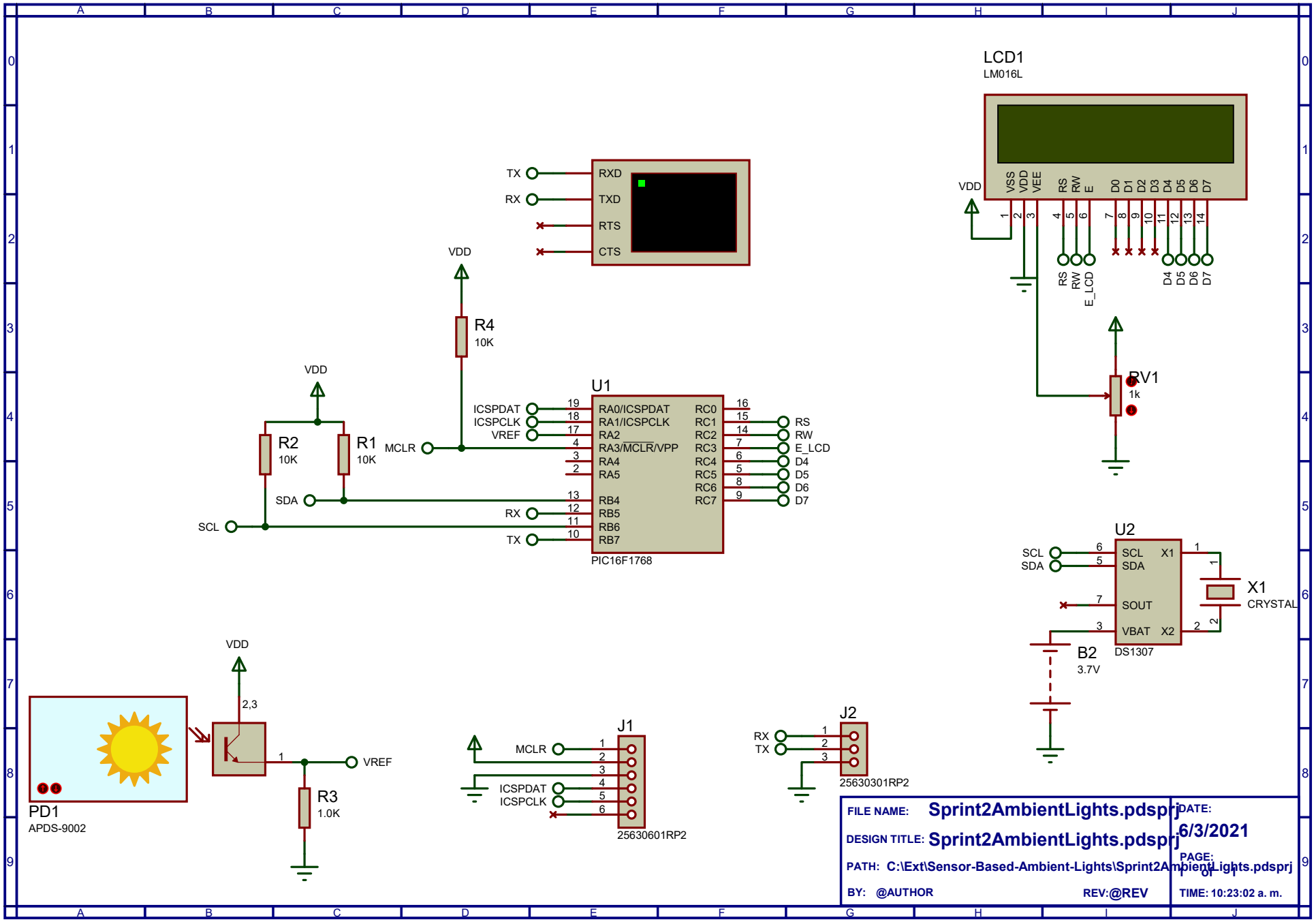
LCD1
LM016L
VDD
VSS VDD VEE RS RW E D0 D1 D2 D3 D4 D5 D6 D7
RS RW E_LCD
D4 D5 D6 D7
RV1
1k
TX
RX
RXD
TXD
RTS
CTS
VDD
R4
10K
U1
ICSPDAT
ICSPCLK
VREF
MCLR
RA0/ICSPDAT
RA1/ICSPCLK
RA2
RA3/MCLR/VPP
RA4
RA5
RB4
RB5
RB6
RB7
RC0
RC1
RC2
RC3
RC4
RC5
RC6
RC7
RS
RW
E_LCD
D4
D5
D6
D7
PIC16F1768
VDD
R2
10K
R1
10K
SDA
SCL
RX
TX
U2
SCL
SDA
SOUT
VBAT
X1
X2
DS1307
X1
CRYSTAL
B2
3.7V
VDD
2,3
VREF
R3
1.0K
PD1
APDS-9002
J1
MCLR
ICSPDAT
ICSPCLK
25630601RP2
J2
RX
TX
25630301RP2
FILE NAME: Sprint2AmbientLights.pdsprj
DESIGN TITLE: Sprint2AmbientLights.pdsprj
PATH: C:\Ext\Sensor-Based-Ambient-Lights\Sprint2AmbientLights.pdsprj
BY: @AUTHOR
REV:@REV
DATE: 6/3/2021
PAGE: 1 of 1
TIME: 10:23:02 a. m.