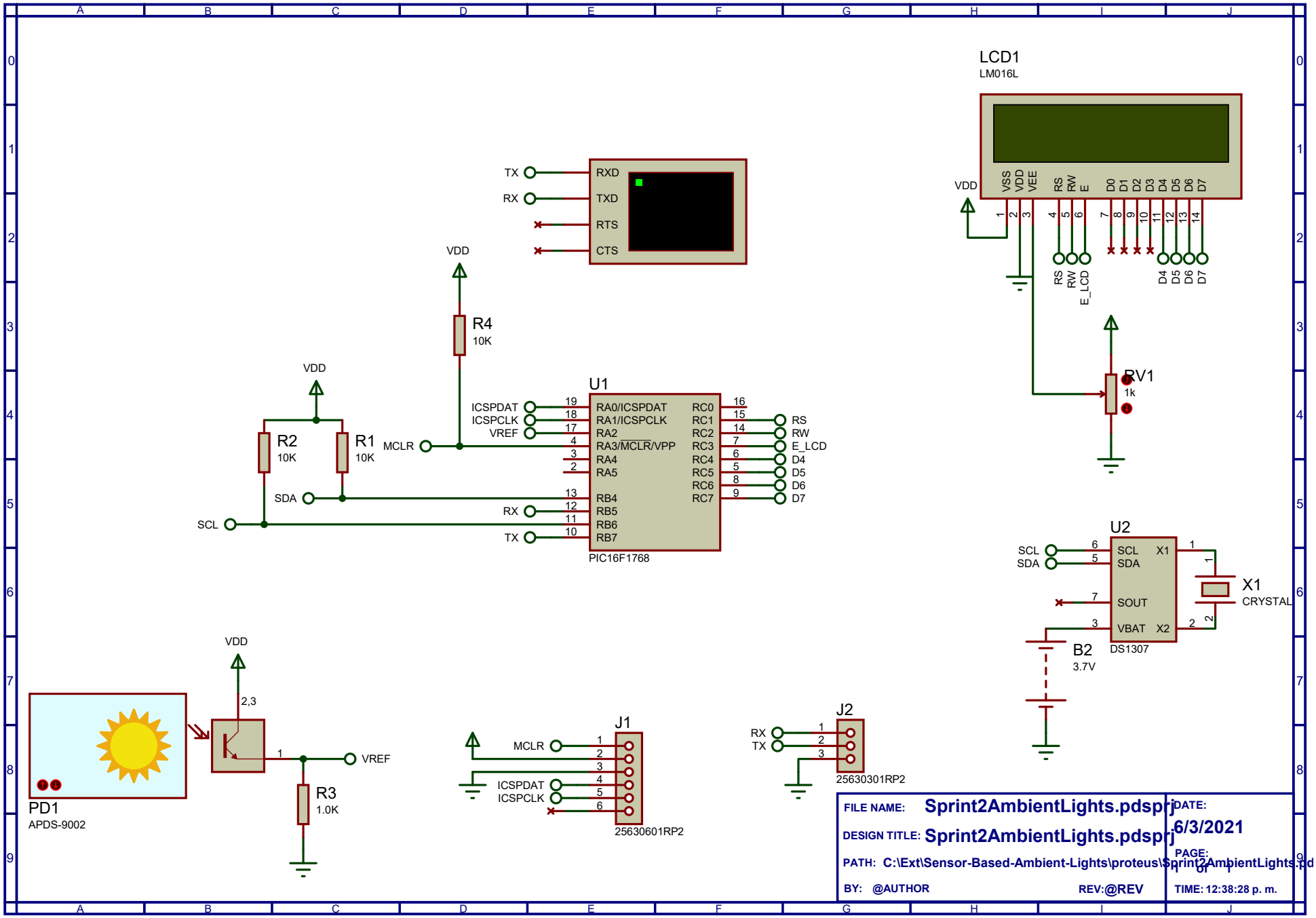
LCD1
LM016L
VDD
VSS VDD VEE RS RW E D0 D1 D2 D3 D4 D5 D6 D7
RS RW E_LCD
D4 D5 D6 D7
RV1
1k
TX
RX
RXD
TXD
RTS
CTS
VDD
R4
10K
U1
ICSPDAT
ICSPCLK
VREF
MCLR
RA0/ICSPDAT
RA1/ICSPCLK
RA2
RA3/MCLR/VPP
RA4
RA5
RB4
RB5
RB6
RB7
RC0
RC1
RC2
RC3
RC4
RC5
RC6
RC7
RS
RW
E_LCD
D4
D5
D6
D7
PIC16F1768
R2
10K
R1
10K
SDA
SCL
U2
SCL
SDA
X1
SOUT
VBAT
DS1307
X1
CRYSTAL
B2
3.7V
PD1
APDS-9002
2,3
VREF
R3
1.0K
J1
MCLR
ICSPDAT
ICSPCLK
25630601RP2
J2
RX
TX
25630301RP2
FILE NAME: Sprint2AmbientLights.pdsprj
DESIGN TITLE: Sprint2AmbientLights.pdsprj
PATH: C:\Ext\Sensor-Based-Ambient-Lights\proteus\Sprint2AmbientLights.pd
BY: @AUTHOR
REV:@REV
DATE: 6/3/2021
PAGE: 1 of 1
TIME: 12:38:28 p. m.