C8051F91x-C8051F90x

Single/Dual Battery, 0.9–3.6 V, 16–8 kB, SmaRTClock, 12/10-Bit ADC MCU

Ultra-Low Power
- 160 uA/MHz in active mode (24.5 MHz clock)
- 2 us wake-up time (two-cell mode)
- 10 nA sleep mode with memory retention;
- 50 nA sleep mode with brownout detector
- 300 nA sleep mode with LFO (‘F912/02 only)
- 600 nA sleep mode with external crystal

Supply Voltage 0.9 to 3.6 V
- One-cell mode supports 0.9 to 1.8 V operation (‘F911/01). ‘F912 and ‘F902 devices can operate from 0.9 to 3.6 V continuously
- Two-cell mode supports 1.8 to 3.6 V operation
- Built-in dc-dc converter with 1.8 to 3.3 V output for use in one-cell mode
- Built-in LDO regulator allows a high analog supply voltage and low digital core voltage
- 2 built in supply monitors (brownout detectors)

12-Bit or 10-Bit Analog to Digital Converter
- ±1 LSB INL (10-bit mode); ±1.5 LSB INL (12-bit mode, ‘F912/02 only) no missing codes
- Programmable throughput up to 300 ksps (10-Bit Mode) or 75 ksps (12-bit mode, ‘F912/02 only)
- Up to 15 external inputs
- On-chip voltage reference
- On-Chip PGA allows measuring voltages up to twice the reference voltage
- 16-bit auto-averaging accumulator with burst mode provides increased ADC resolution
- Data dependent windowed interrupt generator
- Built-in temperature sensor

Two Comparators
- Programmable hysteresis and response time
- Configurable as wake-up or reset source
- Up to 15 Capacitive Touch Sense Inputs

6-Bit Programmable Current Reference
- Up to ±500 µA. Can be used as a bias or for generating a custom reference voltage
- PWM enhanced mode on ‘F912/02 devices

High-Speed 8051 µC Core
- Pipelined instruction architecture; executes 70% of instructions in 1 or 2 system clocks
- Up to **25 MIPS** throughput with 25 MHz clock
- Expanded interrupt handler

Memory
- 768 bytes RAM
- 16 kB (‘F912/1), or 8 kB (‘F902/1) Flash; In-system programmable

Digital Peripherals
- 16 port I/O; All 5 V tolerant with high sink current and programmable drive strength
- Hardware SMBus™ (I^2C™ Compatible), 2 x SPI™, and UART serial ports available concurrently
- Four general purpose 16-bit counter/timers
- Programmable 16-bit counter/timer array with six capture/compare modules and watchdog timer

Clock Sources
- Internal oscillators: 24.5 MHz, 2% accuracy supports UART operation; 20 MHz low power oscillator requires very little bias current.
- External oscillator: Crystal, RC, C, or CMOS clock
- SmaRTClock oscillator: 32 kHz crystal or internal low frequency oscillator (‘F912/02) or self-oscillate mode
- Can switch between clock sources on-the-fly; useful in implementing various power saving modes

On-Chip Debug
- On-chip debug circuitry facilitates full-speed, non-intrusive in-system debug (no emulator required)
- Provides 4 breakpoints, single stepping
- Inspect/modify memory and registers
- Complete development kit

Packages
- 24-pin QFN (4 x 4 mm)
- 24-pin QSOP (easy to hand-solder)

Temperature Range: –40 to +85 °C

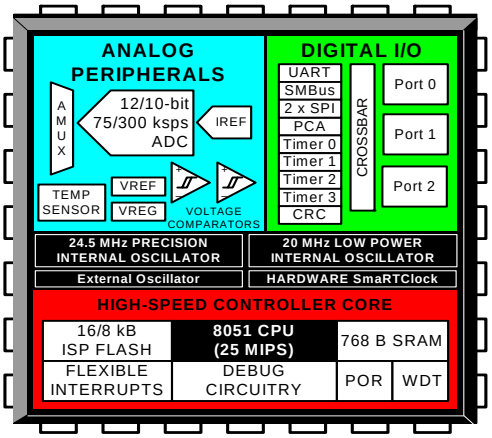

Copyright © 2009 by Silicon Laboratories

Table of Contents

1. System Overview ... 18
1.1. CIP-51™ Microcontroller Core ... 21
1.1.1. Fully 8051 Compatible ... 21
1.1.2. Improved Throughput ... 21
1.1.3. Additional Features ... 21
1.2. Port Input/Output ... 22
1.3. Serial Ports ... 23
1.4. Programmable Counter Array ... 23
1.5. SAR ADC with 16-bit Auto-Averaging Accumulator and Autonomous Low Power Burst Mode ... 24
1.6. Programmable Current Reference (IREF0) ... 25
1.7. Comparators ... 25
2. Ordering Information ... 27
3. Pinout and Package Definitions ... 29
4. Electrical Characteristics ... 40
4.1. Absolute Maximum Specifications ... 40
4.2. Electrical Characteristics ... 41
5. SAR ADC with 16-bit Auto-Averaging Accumulator and Autonomous Low Power Burst Mode ... 66
5.1. Output Code Formatting ... 67
5.2. Modes of Operation ... 68
5.2.1. Starting a Conversion ... 68
5.2.2. Tracking Modes ... 69
5.2.3. Burst Mode ... 70
5.2.4. Settling Time Requirements ... 71
5.2.5. Gain Setting ... 72
5.3. 8-Bit Mode ... 72
5.4. 12-Bit Mode (C8051F912/02 Only) ... 72
5.5. Low Power Mode (C8051F912/902 only) ... 72
5.6. Programmable Window Detector ... 79
5.6.1. Window Detector In Single-Ended Mode ... 81
5.6.2. ADC0 Specifications ... 81
5.7. ADC0 Analog Multiplexer ... 82
5.8. Temperature Sensor ... 84
5.8.1. Calibration ... 85
5.9. Voltage and Ground Reference Options ... 87
5.10. External Voltage References ... 88
5.11. Internal Voltage References ... 88
5.12. Analog Ground Reference ... 88
5.13. Temperature Sensor Enable ... 88
5.14. Voltage Reference Electrical Specifications ... 89
6. Programmable Current Reference (IREF0) ... 91
6.1. PWM Enhanced Mode ... 91

6.2. IREF0 Specifications ... 92
7. Comparators ... 93
7.1. Comparator Inputs ... 93
7.2. Comparator Outputs ... 94
7.3. Comparator Response Time ... 95
7.4. Comparator Hysteresis ... 95
7.5. Comparator Register Descriptions ... 96
7.6. Comparator0 and Comparator1 Analog Multiplexers ... 100
8. CIP-51 Microcontroller ... 103
8.1. Performance ... 103
8.2. Programming and Debugging Support ... 104
8.3. Instruction Set ... 104
8.3.1. Instruction and CPU Timing ... 104
8.4. CIP-51 Register Descriptions ... 109
9. Memory Organization ... 112
9.1. Program Memory ... 113
9.1.1. MOVX Instruction and Program Memory ... 113
9.2. Data Memory ... 113
9.2.1. Internal RAM ... 113
9.2.2. External RAM ... 115
10. On-Chip XRAM ... 116
10.1. Accessing XRAM ... 116
10.1.1. 16-Bit MOVX Example ... 116
10.1.2. 8-Bit MOVX Example ... 116
10.2. Special Function Registers ... 117
11. Special Function Registers ... 119
11.1. SFR Paging ... 120
12. Interrupt Handler ... 126
12.1. Enabling Interrupt Sources ... 126
12.2. MCU Interrupt Sources and Vectors ... 126
12.3. Interrupt Priorities ... 127
12.4. Interrupt Latency ... 127
12.5. Interrupt Register Descriptions ... 129
12.6. External Interrupts $\overline{\text{INT0}}$ and $\overline{\text{INT1}}$ ... 136
13. Flash Memory ... 138
13.1. Programming The Flash Memory ... 138
13.1.1. Flash Lock and Key Functions ... 138
13.1.2. Flash Erase Procedure ... 139
13.1.3. Flash Write Procedure ... 139
13.2. Non-volatile Data Storage ... 139
13.3. Security Options ... 140
13.4. Determining the Device Part Number at Run Time ... 142
13.5. Flash Write and Erase Guidelines ... 143
13.5.1. VDD Maintenance and the VDD Monitor ... 143
13.5.2. PSWE Maintenance ... 144

13.5.3.System Clock 144
13.6.Minimizing Flash Read Current 145
14. Power Management 149
14.1.Normal Mode 150
14.2.Idle Mode 151
14.3.Stop Mode 151
14.4.Suspend Mode 152
14.5.Sleep Mode 152
14.6.Configuring Wakeup Sources 153
14.7.Determining the Event that Caused the Last Wakeup 154
14.8.Power Management Specifications 157
15. Cyclic Redundancy Check Unit (CRC0) 158
15.1.CRC Algorithm 158
15.2.Preparing for a CRC Calculation 160
15.3.Performing a CRC Calculation 160
15.4.Accessing the CRC0 Result 160
15.5.CRC0 Bit Reverse Feature 165
16. On-Chip DC-DC Converter (DC0) 166
16.1.Startup Behavior 167
16.2.**High Power Applications 168**
16.3.Pulse Skipping Mode 168
16.4.Enabling the DC-DC Converter 169
16.5.Minimizing Power Supply Noise 170
16.6.Selecting the Optimum Switch Size 170
16.7.DC-DC Converter Clocking Options 170
16.8.DC-DC Converter Behavior in Sleep Mode 170
16.9.Bypass Mode (C8051F912/02 only) 171
16.10.Low Power Mode (C8051F912/02 only) 171
16.11.Passive Diode Mode (C8051F912/02 only) 172
16.12.DC-DC Converter Register Descriptions 173
16.13.DC-DC Converter Specifications 175
17. Voltage Regulator (VREG0) 177
17.1.Voltage Regulator Electrical Specifications 177
18. Reset Sources 178
18.1.Power-On (VBAT Supply Monitor) Reset 179
18.2.Power-Fail (VDD/DC+ Supply Monitor) Reset 180
18.3.External Reset 183
18.4.Missing Clock Detector Reset 183
18.5.Comparator0 Reset 183
18.6.PCA Watchdog Timer Reset 183
18.7.Flash Error Reset 184
18.8.SmaRTClock (Real Time Clock) Reset 184
18.9.Software Reset 184
19. Clocking Sources 186
19.1.Programmable Precision Internal Oscillator 187

19.2.Low Power Internal Oscillator ... 187
19.3.External Oscillator Drive Circuit ... 187
19.3.1.External Crystal Mode ... 187
19.3.2.External RC Mode ... 189
19.3.3.External Capacitor Mode ... 190
19.3.4.External CMOS Clock Mode ... 191
19.4.Special Function Registers for Selecting and Configuring the System Clock 192
20. SmaRTClock (Real Time Clock) ... 195
20.1.SmaRTClock Interface ... 196
20.1.1.SmaRTClock Lock and Key Functions ... 196
20.1.2.Using RTC0ADR and RTC0DAT to Access SmaRTClock Internal Registers ... 197
20.1.3.RTC0ADR Short Strobe Feature ... 197
20.1.4.SmaRTClock Interface Autoread Feature ... 197
20.1.5.RTC0ADR Autoincrement Feature ... 198
20.2.SmaRTClock Clocking Sources ... 201
20.2.1.Using the SmaRTClock Oscillator with a Crystal or External CMOS Clock ... 201
20.2.2.Using the SmaRTClock Oscillator in Self-Oscillate Mode ... 202
20.2.3.Using the Low Frequency Oscillator (LFO) ... 202
20.2.4.Programmable Load Capacitance ... 203
20.2.5.Automatic Gain Control (Crystal Mode Only) and SmaRTClock Bias Doubling ... 204
20.2.6.Missing SmaRTClock Detector ... 206
20.2.7.SmaRTClock Oscillator Crystal Valid Detector ... 206
20.3.SmaRTClock Timer and Alarm Function ... 206
20.3.1.Setting and Reading the SmaRTClock Timer Value ... 206
20.3.2.Setting a SmaRTClock Alarm ... 206
20.3.3.Software Considerations for using the SmaRTClock Timer and Alarm . 208
21. Port Input/Output ... 214
21.1.Port I/O Modes of Operation ... 215
21.1.1.Port Pins Configured for Analog I/O ... 215
21.1.2.Port Pins Configured For Digital I/O ... 215
21.1.3.Interfacing Port I/O to 5 V Logic ... 216
21.1.4.Increasing Port I/O Drive Strength ... 216
21.2.Assigning Port I/O Pins to Analog and Digital Functions ... 216
21.2.1.Assigning Port I/O Pins to Analog Functions ... 216
21.2.2.Assigning Port I/O Pins to Digital Functions ... 217
21.2.3.Assigning Port I/O Pins to External Digital Event Capture Functions ... 217
21.3.Priority Crossbar Decoder ... 218
21.4.Port Match ... 224
21.5.Special Function Registers for Accessing and Configuring Port I/O ... 226
22. SMBus ... 234
22.1.Supporting Documents ... 235
22.2.SMBus Configuration ... 235

22.3.SMBus Operation ... 236
22.3.1.Transmitter Vs. Receiver ... 236
22.3.2.Arbitration ... 236
22.3.3.Clock Low Extension ... 237
22.3.4.SCL Low Timeout ... 237
22.3.5.SCL High (SMBus Free) Timeout ... 237
22.4.Using the SMBus ... 238
22.4.1.SMBus Configuration Register ... 239
22.4.2.SMB0CN Control Register ... 242
22.4.3.Hardware Slave Address Recognition ... 245
22.4.4.Data Register ... 247
22.5.SMBus Transfer Modes ... 248
22.5.1.Write Sequence (Master) ... 248
22.5.2.Read Sequence (Master) ... 249
22.5.3.Write Sequence (Slave) ... 250
22.5.4.Read Sequence (Slave) ... 251
22.6.SMBus Status Decoding ... 251
23. UART0 ... 256
23.1.Enhanced Baud Rate Generation ... 257
23.2.Operational Modes ... 258
23.2.1.8-Bit UART ... 258
23.2.2.9-Bit UART ... 259
23.3.Multiprocessor Communications ... 259
24. Enhanced Serial Peripheral Interface (SPI0 and SPI1) ... 264
24.1.Signal Descriptions ... 265
24.1.1.Master Out, Slave In (MOSI) ... 265
24.1.2.Master In, Slave Out (MISO) ... 265
24.1.3.Serial Clock (SCK) ... 265
24.1.4.Slave Select (NSS) ... 265
24.2.SPI Master Mode Operation ... 266
24.3.SPI Slave Mode Operation ... 268
24.4.SPI Interrupt Sources ... 268
24.5.Serial Clock Phase and Polarity ... 269
24.6.SPI Special Function Registers ... 271
25. Timers ... 279
25.1.Timer 0 and Timer 1 ... 281
25.1.1.Mode 0: 13-bit Counter/Timer ... 281
25.1.2.Mode 1: 16-bit Counter/Timer ... 282
25.1.3.Mode 2: 8-bit Counter/Timer with Auto-Reload ... 283
25.1.4.Mode 3: Two 8-bit Counter/Timers (Timer 0 Only) ... 284
25.2.Timer 2 ... 289
25.2.1.16-bit Timer with Auto-Reload ... 289
25.2.2.8-bit Timers with Auto-Reload ... 290
25.2.3.Comparator 0/SmaRTClock Capture Mode ... 291
25.3.Timer 3 ... 295

25.3.1.16-bit Timer with Auto-Reload 295
25.3.2.8-bit Timers with Auto-Reload 296
25.3.3.Comparator 1/External Oscillator Capture Mode 297
26. Programmable Counter Array 301
26.1.PCA Counter/Timer 302
26.2.PCA0 Interrupt Sources 303
26.3.Capture/Compare Modules 305
26.3.1.Edge-triggered Capture Mode 306
26.3.2.Software Timer (Compare) Mode 307
26.3.3.High-Speed Output Mode 308
26.3.4.Frequency Output Mode 309
26.3.5. 8-Bit, 9-Bit, 10-Bit and 11-Bit Pulse Width Modulator Modes 310
26.3.6. 16-Bit Pulse Width Modulator Mode 312
26.4.Watchdog Timer Mode 313
26.4.1.Watchdog Timer Operation 313
26.4.2.Watchdog Timer Usage 314
26.5.Register Descriptions for PCA0 315
27. C2 Interface 322
27.1.C2 Interface Registers 322
27.2.C2 Pin Sharing 325
Contact Information 326

List of Figures

1. System Overview
Figure 1.1. C8051F912 Block Diagram ... 19
Figure 1.2. C8051F911 Block Diagram ... 19
Figure 1.3. C8051F902 Block Diagram ... 20
Figure 1.4. C8051F901 Block Diagram ... 20
Figure 1.5. Port I/O Functional Block Diagram ... 22
Figure 1.6. PCA Block Diagram ... 23
Figure 1.7. ADC0 Functional Block Diagram ... 24
Figure 1.8. ADC0 Multiplexer Block Diagram ... 25
Figure 1.9. Comparator 0 Functional Block Diagram ... 26
Figure 1.10. Comparator 1 Functional Block Diagram ... 26
2. Ordering Information
3. Pinout and Package Definitions
Figure 3.1. QFN-24 Pinout Diagram (Top View) ... 33
Figure 3.2. QSOP-24 Pinout Diagram F912 (Top View) ... 34
Figure 3.3. QFN-24 Package Drawing ... 35
Figure 3.4. Typical QFN-24 Landing Diagram ... 36
Figure 3.5. QSOP-24 Package Diagram ... 38
Figure 3.6. QSOP-24 Landing Diagram ... 39
4. Electrical Characteristics
Figure 4.1. Active Mode Current (External CMOS Clock) ... 45
Figure 4.2. Idle Mode Current (External CMOS Clock) ... 46
Figure 4.3. Typical DC-DC Converter Efficiency (High Current, VDD/DC+ = 2 V) ... 47
Figure 4.4. Typical DC-DC Converter Efficiency (High Current, VDD/DC+ = 3 V) ... 48
Figure 4.5. Typical DC-DC Converter Efficiency (Low Current, VDD/DC+ = 2 V) ... 49
Figure 4.6. Typical One-Cell Suspend Mode Current ... 50
Figure 4.7. Typical VOH Curves, 1.8–3.6 V ... 52
Figure 4.8. Typical VOH Curves, 0.9–1.8 V ... 53
Figure 4.9. Typical VOL Curves, 1.8–3.6 V ... 54
Figure 4.10. Typical VOL Curves, 0.9–1.8 V ... 55
5. SAR ADC with 16-bit Auto-Averaging Accumulator and Autonomous Low Power Burst Mode
Figure 5.1. ADC0 Functional Block Diagram ... 66
Figure 5.2. 10-Bit ADC Track and Conversion Example Timing (BURSTEN = 0) ... 69
Figure 5.3. Burst Mode Tracking Example with Repeat Count Set to 4 ... 70
Figure 5.4. ADC0 Equivalent Input Circuits ... 71
Figure 5.5. ADC Window Compare Example: Right-Justified Single-Ended Data ... 81
Figure 5.6. ADC Window Compare Example: Left-Justified Single-Ended Data ... 81
Figure 5.7. ADC0 Multiplexer Block Diagram ... 82
Figure 5.8. Temperature Sensor Transfer Function ... 84
Figure 5.9. Temperature Sensor Error with 1-Point Calibration (V_{REF} = 1.68 V) ... 85
Figure 5.10. Voltage Reference Functional Block Diagram ... 87
6. Programmable Current Reference (IREF0)

7. Comparators
Figure 7.1. Comparator 0 Functional Block Diagram 93
Figure 7.2. Comparator 1 Functional Block Diagram 94
Figure 7.3. Comparator Hysteresis Plot 95
Figure 7.4. CPn Multiplexer Block Diagram..... 100
8. CIP-51 Microcontroller
Figure 8.1. CIP-51 Block Diagram..... 103
9. Memory Organization
Figure 9.1. C8051F91x-C8051F90x Memory Map 112
Figure 9.2. Flash Program Memory Map..... 113
10. On-Chip XRAM
11. Special Function Registers
12. Interrupt Handler
13. Flash Memory
Figure 13.1. Flash Program Memory Map (16 kB and 8 kB devices)..... 140
14. Power Management
Figure 14.1. C8051F91x-C8051F90x Power Distribution..... 150
15. Cyclic Redundancy Check Unit (CRC0)
Figure 15.1. CRC0 Block Diagram 158
Figure 15.2. Bit Reverse Register 165
16. On-Chip DC-DC Converter (DC0)
Figure 16.1. DC-DC Converter Block Diagram..... 166
Figure 16.2. DC-DC Converter Configuration Options 169
17. Voltage Regulator (VREG0)
18. Reset Sources
Figure 18.1. Reset Sources..... 178
Figure 18.2. Power-Fail Reset Timing Diagram 179
Figure 18.3. Power-Fail Reset Timing Diagram 180
19. Clocking Sources
Figure 19.1. Clocking Sources Block Diagram..... 186
Figure 19.2. 25 MHz External Crystal Example..... 188
20. SmaRTClock (Real Time Clock)
Figure 20.1. SmaRTClock Block Diagram..... 195
Figure 20.2. Interpreting Oscillation Robustness (Duty Cycle) Test Results..... 204
21. Port Input/Output
Figure 21.1. Port I/O Functional Block Diagram..... 214
Figure 21.2. Port I/O Cell Block Diagram 215
Figure 21.3. Crossbar Priority Decoder with No Pins Skipped..... 219
Figure 21.4. Crossbar Priority Decoder with Crystal Pins Skipped 220
22. SMBus
Figure 22.1. SMBus Block Diagram 234
Figure 22.2. Typical SMBus Configuration..... 235
Figure 22.3. SMBus Transaction..... 236
Figure 22.4. Typical SMBus SCL Generation..... 239
Figure 22.5. Typical Master Write Sequence 248

Figure 22.6. Typical Master Read Sequence 249
Figure 22.7. Typical Slave Write Sequence 250
Figure 22.8. Typical Slave Read Sequence 251
23. UART0
Figure 23.1. UART0 Block Diagram 256
Figure 23.2. UART0 Baud Rate Logic 257
Figure 23.3. UART Interconnect Diagram 258
Figure 23.4. 8-Bit UART Timing Diagram 258
Figure 23.5. 9-Bit UART Timing Diagram 259
Figure 23.6. UART Multi-Processor Mode Interconnect Diagram 260
24. Enhanced Serial Peripheral Interface (SPI0 and SPI1)
Figure 24.1. SPI Block Diagram 264
Figure 24.2. Multiple-Master Mode Connection Diagram 267
Figure 24.3. 3-Wire Single Master and 3-Wire Single Slave Mode Connection Diagram 267
Figure 24.4. 4-Wire Single Master Mode and 4-Wire Slave Mode Connection Diagram 267
Figure 24.5. Master Mode Data/Clock Timing 269
Figure 24.6. Slave Mode Data/Clock Timing (CKPHA = 0) 270
Figure 24.7. Slave Mode Data/Clock Timing (CKPHA = 1) 270
Figure 24.8. SPI Master Timing (CKPHA = 0) 275
Figure 24.9. SPI Master Timing (CKPHA = 1) 276
Figure 24.10. SPI Slave Timing (CKPHA = 0) 276
Figure 24.11. SPI Slave Timing (CKPHA = 1) 277
25. Timers
Figure 25.1. T0 Mode 0 Block Diagram 282
Figure 25.2. T0 Mode 2 Block Diagram 283
Figure 25.3. T0 Mode 3 Block Diagram 284
Figure 25.4. Timer 2 16-Bit Mode Block Diagram 289
Figure 25.5. Timer 2 8-Bit Mode Block Diagram 290
Figure 25.6. Timer 2 Capture Mode Block Diagram 291
Figure 25.7. Timer 3 16-Bit Mode Block Diagram 295
Figure 25.8. Timer 3 8-Bit Mode Block Diagram. 296
Figure 25.9. Timer 3 Capture Mode Block Diagram 297
26. Programmable Counter Array
Figure 26.1. PCA Block Diagram 301
Figure 26.2. PCA Counter/Timer Block Diagram 303
Figure 26.3. PCA Interrupt Block Diagram 304
Figure 26.4. PCA Capture Mode Diagram 306
Figure 26.5. PCA Software Timer Mode Diagram 307
Figure 26.6. PCA High-Speed Output Mode Diagram 308
Figure 26.7. PCA Frequency Output Mode 309
Figure 26.8. PCA 8-Bit PWM Mode Diagram 310
Figure 26.9. PCA 9, 10 and 11-Bit PWM Mode Diagram 311
Figure 26.10. PCA 16-Bit PWM Mode 312

Figure 26.11. PCA Module 5 with Watchdog Timer Enabled 313
27. C2 Interface
Figure 27.1. Typical C2 Pin Sharing..... 325

List of Tables

1. System Overview
2. Ordering Information
Table 2.1. Product Selection Guide 27
3. Pinout and Package Definitions
Table 3.1. Pin Definitions for the C8051F91x-C8051F90x 29
Table 3.2. QFN-24 Package Dimensions 35
Table 3.3. PCB Land Pattern 37
Table 3.4. QSOP-24 Package Dimensions 38
Table 3.5. PCB Land Pattern 39
4. Electrical Characteristics
Table 4.1. Absolute Maximum Ratings 40
Table 4.2. Global Electrical Characteristics 41
Table 4.3. Port I/O DC Electrical Characteristics 51
Table 4.4. Reset Electrical Characteristics 56
Table 4.5. Power Management Electrical Specifications 57
Table 4.6. Flash Electrical Characteristics 57
Table 4.7. Internal Precision Oscillator Electrical Characteristics 57
Table 4.8. Internal Low-Power Oscillator Electrical Characteristics 57
Table 4.9. SmaRTClock Characteristics 58
Table 4.10. ADC0 Electrical Characteristics 58
Table 4.11. Temperature Sensor Electrical Characteristics 59
Table 4.12. Voltage Reference Electrical Characteristics 60
Table 4.13. IREF0 Electrical Characteristics 61
Table 4.14. Comparator Electrical Characteristics 62
Table 4.15. VREG0 Electrical Characteristics 63
Table 4.16. DC-DC Converter (DC0) Electrical Characteristics 64
5. SAR ADC with 16-bit Auto-Averaging Accumulator and Autonomous Low Power Burst Mode
6. Programmable Current Reference (IREF0)
7. Comparators
8. CIP-51 Microcontroller
Table 8.1. CIP-51 Instruction Set Summary 105
9. Memory Organization
10. On-Chip XRAM
11. Special Function Registers
Table 11.1. Special Function Register (SFR) Memory Map (Page 0x0) 119
Table 11.2. Special Function Register (SFR) Memory Map (Page 0xF) 120
Table 11.3. Special Function Registers 121
12. Interrupt Handler
Table 12.1. Interrupt Summary 128
13. Flash Memory
Table 13.1. Flash Security Summary 141
14. Power Management

Table 14.1. Power Modes 149
15. Cyclic Redundancy Check Unit (CRC0)
Table 15.1. Example 16-bit CRC Outputs 159
16. On-Chip DC-DC Converter (DC0)
Table 16.1. IPeak Inductor Current Limit Settings 167
17. Voltage Regulator (VREG0)
18. Reset Sources
19. Clocking Sources
Table 19.1. Recommended XFCN Settings for Crystal Mode 188
Table 19.2. Recommended XFCN Settings for RC and C modes 189
20. SmaRTClock (Real Time Clock)
Table 20.1. SmaRTClock Internal Registers 196
Table 20.2. SmaRTClock Load Capacitance Settings 203
Table 20.3. SmaRTClock Bias Settings 205
21. Port Input/Output
Table 21.1. Port I/O Assignment for Analog Functions 216
Table 21.2. Port I/O Assignment for Digital Functions 217
Table 21.3. Port I/O Assignment for External Digital Event Capture Functions . . 217
22. SMBus
Table 22.1. SMBus Clock Source Selection 239
Table 22.2. Minimum SDA Setup and Hold Times 240
Table 22.3. Sources for Hardware Changes to SMB0CN 244
Table 22.4. Hardware Address Recognition Examples (EHACK = 1) 245
Table 22.5. SMBus Status Decoding With Hardware ACK Generation Disabled (EHACK = 0) 252
Table 22.6. SMBus Status Decoding With Hardware ACK Generation Enabled (EHACK = 1) 254
23. UART0
Table 23.1. Timer Settings for Standard Baud Rates Using The Internal 24.5 MHz Oscillator 263
Table 23.2. Timer Settings for Standard Baud Rates Using an External 22.1184 MHz Oscillator 263
24. Enhanced Serial Peripheral Interface (SPI0 and SPI1)
Table 24.1. SPI Slave Timing Parameters 278
25. Timers
Table 25.1. Timer 0 Running Modes 281
26. Programmable Counter Array
Table 26.1. PCA Timebase Input Options 302
Table 26.2. PCA0CPM and PCA0PWM Bit Settings for PCA Capture/Compare Modules 305
Table 26.3. Watchdog Timer Timeout Intervals1 314
27. C2 Interface

List of Registers

SFR Definition 5.1. ADC0CN: ADC0 Control 73
SFR Definition 5.2. ADC0CF: ADC0 Configuration 74
SFR Definition 5.3. ADC0AC: ADC0 Accumulator Configuration 75
SFR Definition 5.4. ADC0PWR: ADC0 Burst Mode Power-Up Time 76
SFR Definition 5.5. ADC0TK: ADC0 Burst Mode Track Time 77
SFR Definition 5.6. ADC0H: ADC0 Data Word High Byte 78
SFR Definition 5.7. ADC0L: ADC0 Data Word Low Byte 78
SFR Definition 5.8. ADC0GTH: ADC0 Greater-Than High Byte 79
SFR Definition 5.9. ADC0GTL: ADC0 Greater-Than Low Byte 79
SFR Definition 5.10. ADC0LTH: ADC0 Less-Than High Byte 80
SFR Definition 5.11. ADC0LTL: ADC0 Less-Than Low Byte 80
SFR Definition 5.12. ADC0MX: ADC0 Input Channel Select 83
SFR Definition 5.13. TOFFH: ADC0 Data Word High Byte 86
SFR Definition 5.14. TOFFL: ADC0 Data Word Low Byte 86
SFR Definition 5.15. REF0CN: Voltage Reference Control 89
SFR Definition 6.1. IREF0CN: Current Reference Control 91
SFR Definition 6.2. IREF0CF: Current Reference Configuration 92
SFR Definition 7.1. CPT0CN: Comparator 0 Control 96
SFR Definition 7.2. CPT0MD: Comparator 0 Mode Selection 97
SFR Definition 7.3. CPT1CN: Comparator 1 Control 98
SFR Definition 7.4. CPT1MD: Comparator 1 Mode Selection 99
SFR Definition 7.5. CPT0MX: Comparator0 Input Channel Select 101
SFR Definition 7.6. CPT1MX: Comparator1 Input Channel Select 102
SFR Definition 8.1. DPL: Data Pointer Low Byte 109
SFR Definition 8.2. DPH: Data Pointer High Byte 109
SFR Definition 8.3. SP: Stack Pointer 110
SFR Definition 8.4. ACC: Accumulator 110
SFR Definition 8.5. B: B Register 110
SFR Definition 8.6. PSW: Program Status Word 111
SFR Definition 10.1. EMI0CN: External Memory Interface Control 117
SFR Definition 11.1. SFR Page: SFR Page 121
SFR Definition 12.1. IE: Interrupt Enable 130
SFR Definition 12.2. IP: Interrupt Priority 131
SFR Definition 12.3. EIE1: Extended Interrupt Enable 1 132
SFR Definition 12.4. EIP1: Extended Interrupt Priority 1 133
SFR Definition 12.5. EIE2: Extended Interrupt Enable 2 134
SFR Definition 12.6. EIP2: Extended Interrupt Priority 2 135
SFR Definition 12.7. IT01CF: INT0/INT1 Configuration 137
SFR Definition 13.1. PSCTL: Program Store R/W Control 146
SFR Definition 13.2. FLKEY: Flash Lock and Key 147
SFR Definition 13.3. FLSCL: Flash Scale 148
SFR Definition 13.4. FLWR: Flash Write Only 148
SFR Definition 14.1. PMU0CF: Power Management Unit Configuration[1,2] 155

SFR Definition 14.2. PMU0MD: Power Management Unit Mode 156
SFR Definition 14.3. PCON: Power Management Control Register 157
SFR Definition 15.1. CRC0CN: CRC0 Control 161
SFR Definition 15.2. CRC0IN: CRC0 Data Input 162
SFR Definition 15.3. CRC0DAT: CRC0 Data Output 162
SFR Definition 15.4. CRC0AUTO: CRC0 Automatic Control 163
SFR Definition 15.5. CRC0CNT: CRC0 Automatic Flash Sector Count 164
SFR Definition 15.6. CRC0FLIP: CRC0 Bit Flip 165
SFR Definition 16.1. DC0CN: DC-DC Converter Control 173
SFR Definition 16.2. DC0CF: DC-DC Converter Configuration 174
SFR Definition 16.3. DC0MD: DC-DC Mode 175
SFR Definition 17.1. REG0CN: Voltage Regulator Control 177
SFR Definition 18.1. VDM0CN: VDD/DC+ Supply Monitor Control 182
SFR Definition 18.2. RSTSRC: Reset Source 185
SFR Definition 19.1. CLKSEL: Clock Select 192
SFR Definition 19.2. OSCICN: Internal Oscillator Control 193
SFR Definition 19.3. OSCICL: Internal Oscillator Calibration 193
SFR Definition 19.4. OSCXCN: External Oscillator Control 194
SFR Definition 20.1. RTC0KEY: SmaRTClock Lock and Key 199
SFR Definition 20.2. RTC0ADR: SmaRTClock Address 200
SFR Definition 20.3. RTC0DAT: SmaRTClock Data 200
Internal Register Definition 20.4. RTC0CN: SmaRTClock Control 209
Internal Register Definition 20.5. RTC0XCN: SmaRTClock Oscillator Control 210
Internal Register Definition 20.6. RTC0XCF: SmaRTClock Oscillator Configuration . 211
Internal Register Definition 20.7. RTC0PIN: SmaRTClock Pin Configuration 211
Internal Register Definition 20.8. CAPTUREn: SmaRTClock Timer Capture 212
Internal Register Definition 20.9. ALARMn: SmaRTClock Alarm Programmed Value 212
SFR Definition 21.1. XBR0: Port I/O Crossbar Register 0 221
SFR Definition 21.2. XBR1: Port I/O Crossbar Register 1 222
SFR Definition 21.3. XBR2: Port I/O Crossbar Register 2 223
SFR Definition 21.4. P0MASK: Port0 Mask Register 224
SFR Definition 21.5. P0MAT: Port0 Match Register 224
SFR Definition 21.6. P1MASK: Port1 Mask Register 225
SFR Definition 21.7. P1MAT: Port1 Match Register 225
SFR Definition 21.8. P0: Port0 227
SFR Definition 21.9. P0SKIP: Port0 Skip 227
SFR Definition 21.10. P0MDIN: Port0 Input Mode 228
SFR Definition 21.11. P0MDOUT: Port0 Output Mode 228
SFR Definition 21.12. P0DRV: Port0 Drive Strength 229
SFR Definition 21.13. P1: Port1 230
SFR Definition 21.14. P1SKIP: Port1 Skip 230
SFR Definition 21.15. P1MDIN: Port1 Input Mode 231
SFR Definition 21.16. P1MDOUT: Port1 Output Mode 231
SFR Definition 21.17. P1DRV: Port1 Drive Strength 232
SFR Definition 21.18. P2: Port2 232

SFR Definition 21.19. P2MDOUT: Port2 Output Mode 233
SFR Definition 21.20. P2DRV: Port2 Drive Strength 233
SFR Definition 22.1. SMB0CF: SMBus Clock/Configuration 241
SFR Definition 22.2. SMB0CN: SMBus Control 243
SFR Definition 22.3. SMB0ADR: SMBus Slave Address 246
SFR Definition 22.4. SMB0ADM: SMBus Slave Address Mask 246
SFR Definition 22.5. SMB0DAT: SMBus Data 247
SFR Definition 23.1. SCON0: Serial Port 0 Control 261
SFR Definition 23.2. SBUF0: Serial (UART0) Port Data Buffer 262
SFR Definition 24.1. SPInCFG: SPI Configuration 272
SFR Definition 24.2. SPInCN: SPI Control 273
SFR Definition 24.3. SPInCKR: SPI Clock Rate 274
SFR Definition 24.4. SPInDAT: SPI Data 275
SFR Definition 25.1. CKCON: Clock Control 280
SFR Definition 25.2. TCON: Timer Control 285
SFR Definition 25.3. TMOD: Timer Mode 286
SFR Definition 25.4. TL0: Timer 0 Low Byte 287
SFR Definition 25.5. TL1: Timer 1 Low Byte 287
SFR Definition 25.6. TH0: Timer 0 High Byte 288
SFR Definition 25.7. TH1: Timer 1 High Byte 288
SFR Definition 25.8. TMR2CN: Timer 2 Control 292
SFR Definition 25.9. TMR2RLL: Timer 2 Reload Register Low Byte 293
SFR Definition 25.10. TMR2RLH: Timer 2 Reload Register High Byte 293
SFR Definition 25.11. TMR2L: Timer 2 Low Byte 294
SFR Definition 25.12. TMR2H Timer 2 High Byte 294
SFR Definition 25.13. TMR3CN: Timer 3 Control 298
SFR Definition 25.14. TMR3RLL: Timer 3 Reload Register Low Byte 299
SFR Definition 25.15. TMR3RLH: Timer 3 Reload Register High Byte 299
SFR Definition 25.16. TMR3L: Timer 3 Low Byte 300
SFR Definition 25.17. TMR3H Timer 3 High Byte 300
SFR Definition 26.1. PCA0CN: PCA Control 315
SFR Definition 26.2. PCA0MD: PCA Mode 316
SFR Definition 26.3. PCA0PWM: PCA PWM Configuration 317
SFR Definition 26.4. PCA0CPMn: PCA Capture/Compare Mode 318
SFR Definition 26.5. PCA0L: PCA Counter/Timer Low Byte 319
SFR Definition 26.6. PCA0H: PCA Counter/Timer High Byte 319
SFR Definition 26.7. PCA0CPLn: PCA Capture Module Low Byte 320
SFR Definition 26.8. PCA0CPHn: PCA Capture Module High Byte 320
C2 Register Definition 27.1. C2ADD: C2 Address 322
C2 Register Definition 27.2. DEVICEID: C2 Device ID 323
C2 Register Definition 27.3. REVID: C2 Revision ID 323
C2 Register Definition 27.4. FPCTL: C2 Flash Programming Control 324
C2 Register Definition 27.5. FPDAT: C2 Flash Programming Data 324

1. System Overview

C8051F91x-C8051F90x devices are fully integrated mixed-signal System-on-a-Chip MCUs. Highlighted features are listed below. Refer to Table 2.1 for specific product feature selection and part ordering numbers.

- Single/Dual Battery operation with on-chip dc-dc boost converter.
- High-speed pipelined 8051-compatible microcontroller core (up to 25 MIPS)
- In-system, full-speed, non-intrusive debug interface (on-chip)
- 10-bit 300 ksps or 12-bit 75 ksps single-ended ADC with analog multiplexer
- 6-Bit Programmable Current Reference. Resolution can be increased with PWM.
- Precision programmable 24.5 MHz internal oscillator with spread spectrum technology.
- 16 kB or 8 kB of on-chip Flash memory
- 768 bytes of on-chip RAM
- SMBus/I^2C, Enhanced UART, and two Enhanced SPI serial interfaces implemented in hardware
- Four general-purpose 16-bit timers
- Programmable Counter/Timer Array (PCA) with six capture/compare modules and Watchdog Timer function
- On-chip Power-On Reset, V_{DD} Monitor, and Temperature Sensor
- Two On-chip Voltage Comparators with 15 Capacitive Touch Sense inputs.
- 16 Port I/O (5 V tolerant)

With on-chip Power-On Reset, V_{DD} monitor, Watchdog Timer, and clock oscillator, the C8051F91x-C8051F90x devices are truly stand-alone System-on-a-Chip solutions. The Flash memory can be reprogrammed even in-circuit, providing non-volatile data storage, and also allowing field upgrades of the 8051 firmware. User software has complete control of all peripherals, and may individually shut down any or all peripherals for power savings.

The on-chip Silicon Labs 2-Wire (C2) Development Interface allows non-intrusive (uses no on-chip resources), full speed, in-circuit debugging using the production MCU installed in the final application. This debug logic supports inspection and modification of memory and registers, setting breakpoints, single stepping, run and halt commands. All analog and digital peripherals are fully functional while debugging using C2. The two C2 interface pins can be shared with user functions, allowing in-system debugging without occupying package pins.

Each device is specified for 0.9 to 1.8 V, 0.9 to 3.6 V or 1.8 to 3.6 V operation over the industrial temperature range (–40 to +85 °C). The Port I/O and $\overline{RST}$ pins are tolerant of input signals up to 5 V. The C8051F91x-C8051F90x devices are available in 24-pin QFN or QSOP packages. Both package options are lead-free and RoHS compliant. See Table 2.1 for ordering information. Block diagrams are included in Figure 1.1 through Figure 1.4.

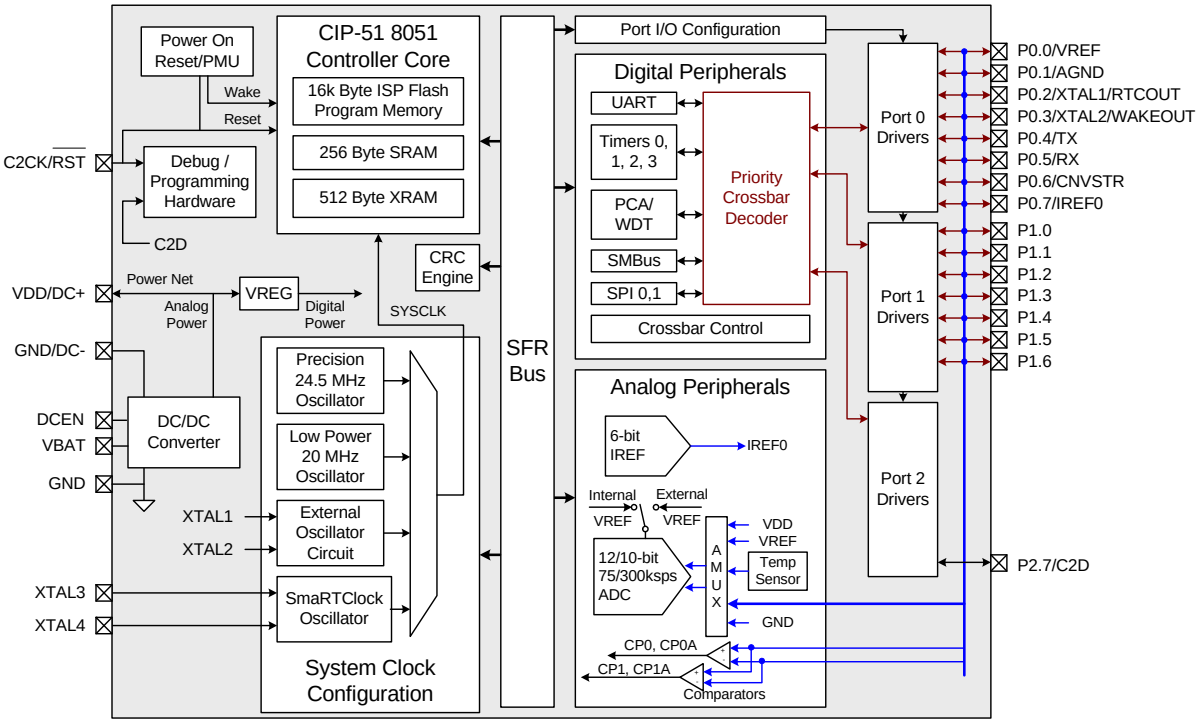

Figure 1.1. C8051F912 Block Diagram

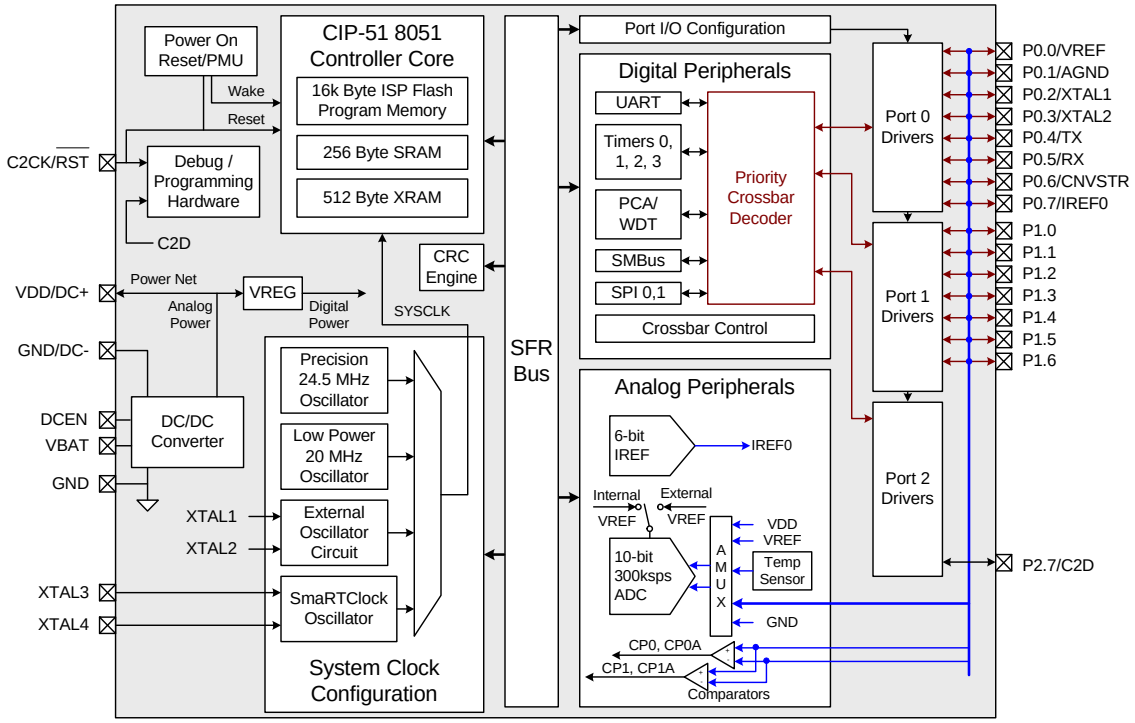

Figure 1.2. C8051F911 Block Diagram

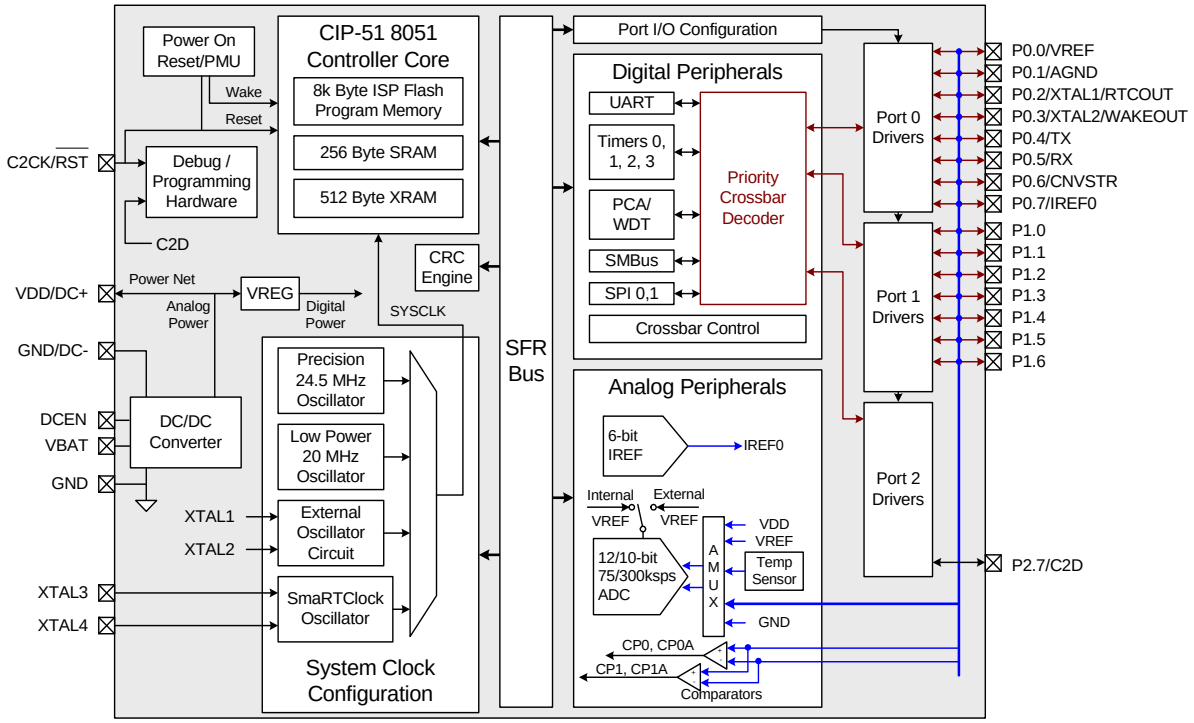

Figure 1.3. C8051F902 Block Diagram

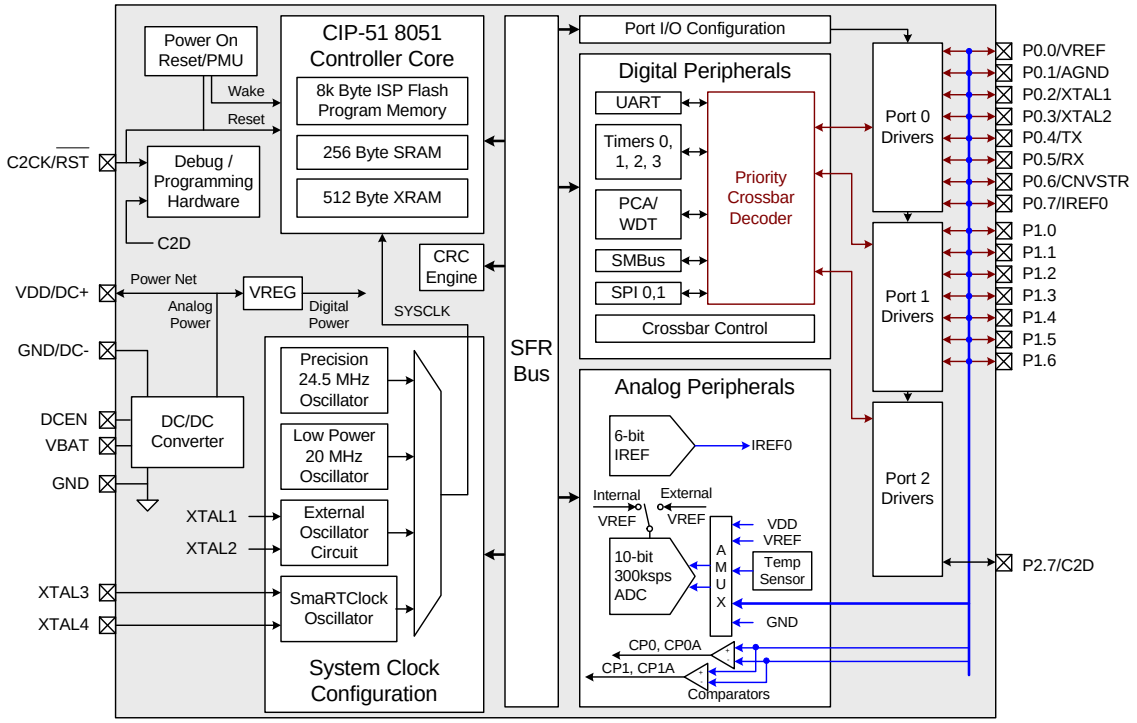

Figure 1.4. C8051F901 Block Diagram

1.1. CIP-51™ Microcontroller Core

1.1.1. Fully 8051 Compatible

The C8051F91x-C8051F90x family utilizes Silicon Labs' proprietary CIP-51 microcontroller core. The CIP-51 is fully compatible with the MCS-51™ instruction set; standard 803x/805x assemblers and compilers can be used to develop software. The CIP-51 core offers all the peripherals included with a standard 8052.

1.1.2. Improved Throughput

The CIP-51 employs a pipelined architecture that greatly increases its instruction throughput over the standard 8051 architecture. In a standard 8051, all instructions except for MUL and DIV take 12 or 24 system clock cycles to execute with a maximum system clock of 12-to-24 MHz. By contrast, the CIP-51 core executes 70% of its instructions in one or two system clock cycles, with only four instructions taking more than four system clock cycles.

The CIP-51 has a total of 109 instructions. The table below shows the total number of instructions that require each execution time.

Clocks to Execute	1	2	2/3	3	3/4	4	4/5	5	8
Number of Instructions	26	50	5	14	7	3	1	2	1

With the CIP-51's maximum system clock at 25 MHz, it has a peak throughput of 25 MIPS.

1.1.3. Additional Features

The C8051F91x-C8051F90x SoC family includes several key enhancements to the CIP-51 core and peripherals to improve performance and ease of use in end applications.

The extended interrupt handler provides multiple interrupt sources into the CIP-51 allowing numerous analog and digital peripherals to interrupt the controller. An interrupt driven system requires less intervention by the MCU, giving it more effective throughput. The extra interrupt sources are very useful when building multi-tasking, real-time systems.

Eight reset sources are available: power-on reset circuitry (POR), an on-chip V_{DD} monitor (forces reset when power supply voltage drops below safe levels), a Watchdog Timer, a Missing Clock Detector, SmaRTClock oscillator fail or alarm, a voltage level detection from Comparator0, a forced software reset, an external reset pin, and an illegal Flash access protection circuit. Each reset source except for the POR, Reset Input Pin, or Flash error may be disabled by the user in software. The WDT may be permanently disabled in software after a power-on reset during MCU initialization.

The internal oscillator factory calibrated to 24.5 MHz and is accurate to ±2% over the full temperature and supply range. The internal oscillator period can also be adjusted by user firmware. An additional 20 MHz low power oscillator is also available which facilitates low-power operation. An external oscillator drive circuit is included, allowing an external crystal, ceramic resonator, capacitor, RC, or CMOS clock source to generate the system clock. If desired, the system clock source may be switched on-the-fly between both internal and external oscillator circuits. An external oscillator can also be extremely useful in low power applications, allowing the MCU to run from a slow (power saving) source, while periodically switching to the fast (up to 25 MHz) internal oscillator as needed.

1.2. Port Input/Output

Digital and analog resources are available through 16 I/O pins. Port pins are organized as three byte-wide ports. Port pins P0.0–P1.6 can be defined as digital or analog I/O. Digital I/O pins can be assigned to one of the internal digital resources or used as general purpose I/O (GPIO). Analog I/O pins are used by the internal analog resources. P2.7 can be used as GPIO and is shared with the C2 Interface Data signal (C2D). See Section “27. C2 Interface” on page 322 for more details.

The designer has complete control over which digital and analog functions are assigned to individual Port pins, limited only by the number of physical I/O pins. This resource assignment flexibility is achieved through the use of a Priority Crossbar Decoder. See Section “21.3. Priority Crossbar Decoder” on page 218 for more information on the Crossbar.

All Port I/Os are 5 V tolerant when used as digital inputs or open-drain outputs. For Port I/Os configured as push-pull outputs, current is sourced from the VDD/DC+ supply. Port I/Os used for analog functions can operate up to the VDD/DC+ supply voltage. See Section “21.1. Port I/O Modes of Operation” on page 215 for more information on Port I/O operating modes and the electrical specifications chapter for detailed electrical specifications.

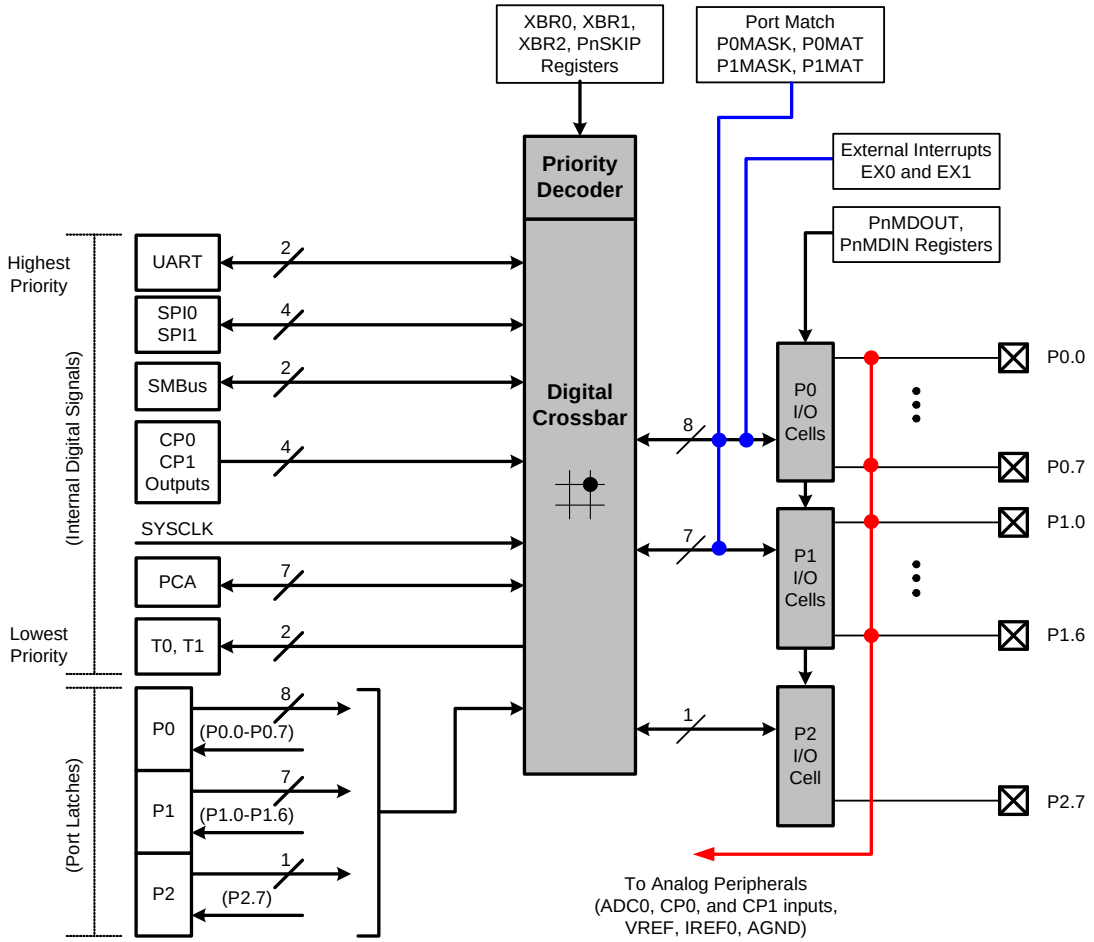

Figure 1.5. Port I/O Functional Block Diagram

1.3. Serial Ports

The C8051F91x-C8051F90x Family includes an SMBus/I^{2}C interface, a full-duplex UART with enhanced baud rate configuration, and two Enhanced SPI interfaces. Each of the serial buses is fully implemented in hardware and makes extensive use of the CIP-51's interrupts, thus requiring very little CPU intervention.

1.4. Programmable Counter Array

An on-chip Programmable Counter/Timer Array (PCA) is included in addition to the four 16-bit general purpose counter/timers. The PCA consists of a dedicated 16-bit counter/timer time base with six programmable capture/compare modules. The PCA clock is derived from one of six sources: the system clock divided by 12, the system clock divided by 4, Timer 0 overflows, an External Clock Input (ECI), the system clock, or the external oscillator clock source divided by 8. ‘F912 and ‘F902 devices also support a SmaRTClock divided by 8 clock source.

Each capture/compare module can be configured to operate in a variety of modes: edge-triggered capture, software timer, high-speed output, pulse width modulator (8, 9, 10, 11, or 16-bit), or frequency output. Additionally, Capture/Compare Module 5 offers watchdog timer (WDT) capabilities. Following a system reset, Module 5 is configured and enabled in WDT mode. The PCA Capture/Compare Module I/O and External Clock Input may be routed to Port I/O via the Digital Crossbar.

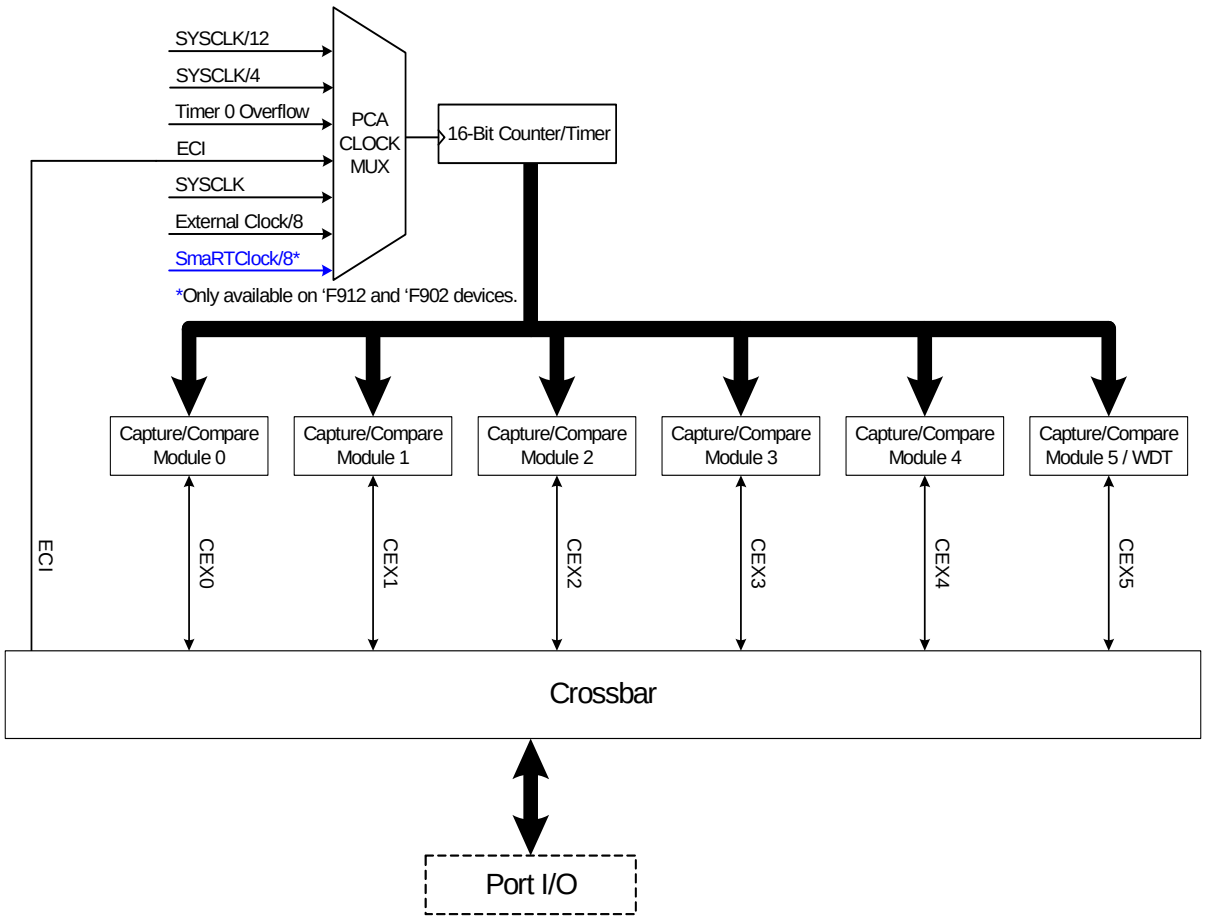

Figure 1.6. PCA Block Diagram

1.5. SAR ADC with 16-bit Auto-Averaging Accumulator and Autonomous Low Power Burst Mode

C8051F91x-C8051F90x devices have a 300 ksps, 10-bit or 75 ksps 12-bit successive-approximation-register (SAR) ADC with integrated track-and-hold and programmable window detector. ADC0 also has an autonomous low power Burst Mode which can automatically enable ADC0, capture and accumulate samples, then place ADC0 in a low power shutdown mode without CPU intervention. It also has a 16-bit accumulator that can automatically average the ADC results, providing an effective 11, 12, or 13 bit ADC result without any additional CPU intervention.

The ADC can sample the voltage at any of the GPIO pins (with the exception of P2.7) and has an on-chip attenuator that allows it to measure voltages up to twice the voltage reference. Additional ADC inputs include an on-chip temperature sensor, the VDD/DC+ supply voltage, the VBAT supply voltage, and the internal digital supply voltage.

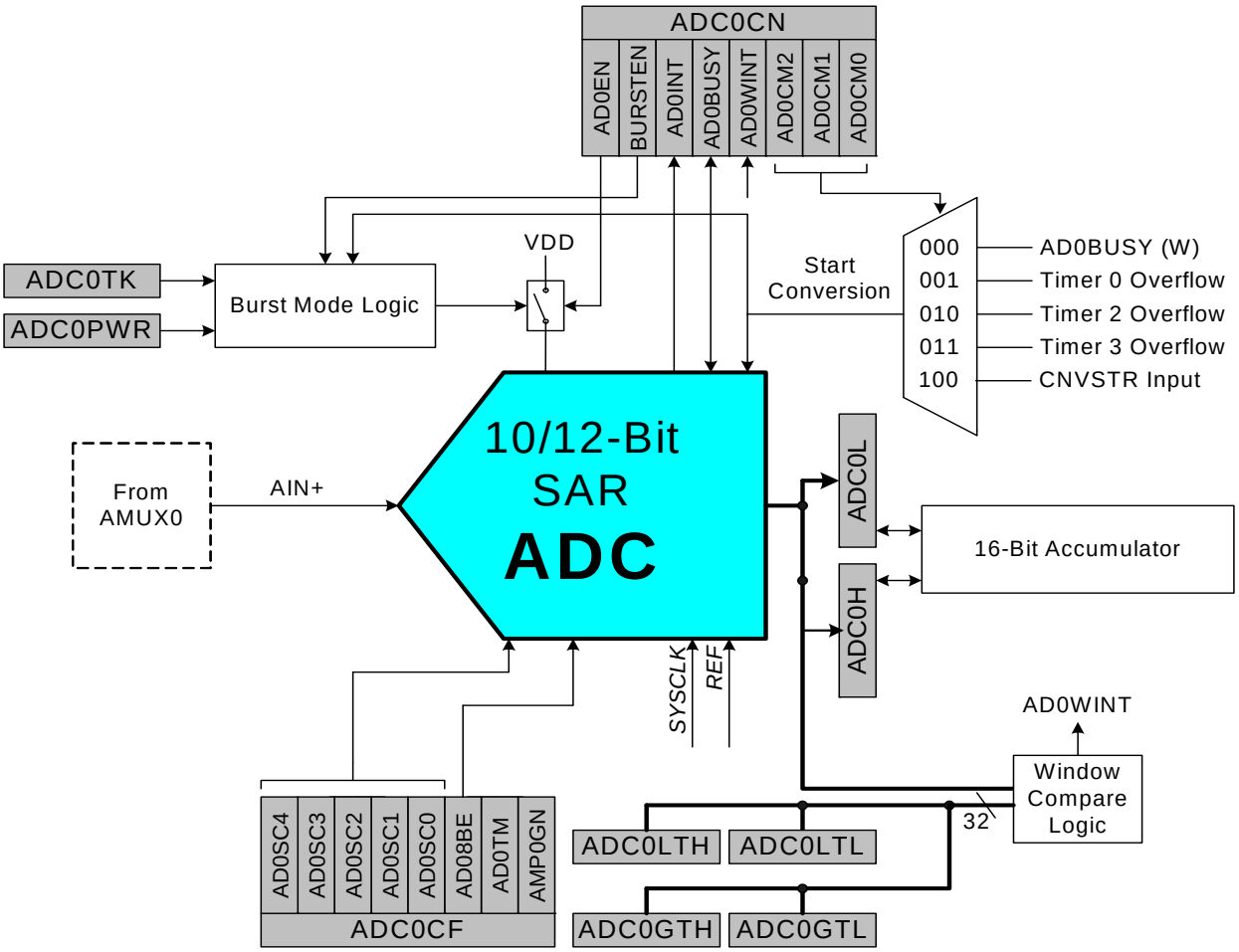

Figure 1.7. ADC0 Functional Block Diagram

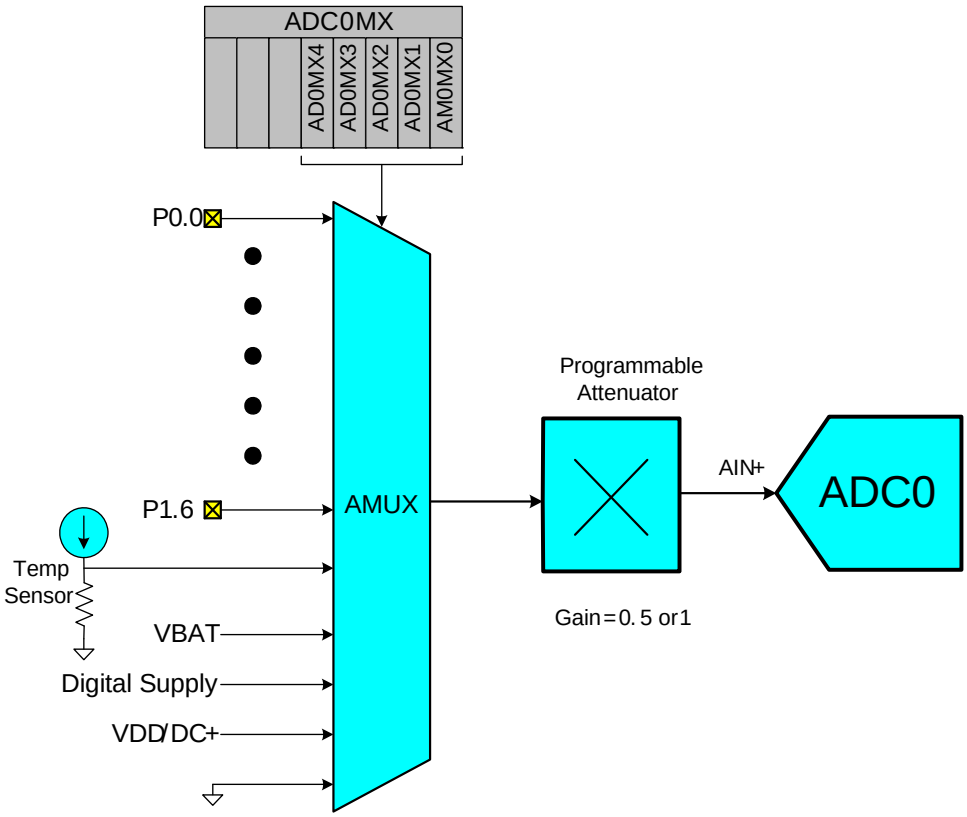

Figure 1.8. ADC0 Multiplexer Block Diagram

1.6. Programmable Current Reference (IREF0)

C8051F91x-C8051F90x devices include an on-chip programmable current reference (source or sink) with two output current settings: low power mode and high current mode. The maximum current output in low power mode is 63 µA (1 µA steps) and the maximum current output in high current mode is 504 µA (8 µA steps).

1.7. Comparators

C8051F91x-C8051F90x devices include two on-chip programmable voltage comparators: Comparator 0 (CPT0) which is shown in Figure 1.9; Comparator 1 (CPT1) which is shown in Figure 1.10. The two comparators operate identically but may differ in their ability to be used as reset or wake-up sources. See Section “18. Reset Sources” on page 178 and the Section “14. Power Management” on page 149 for details on reset sources and low power mode wake-up sources, respectively.

The Comparator offers programmable response time and hysteresis, an analog input multiplexer, and two outputs that are optionally available at the Port pins: a synchronous “latched” output (CP0, CP1), or an asynchronous “raw” output (CP0A, CP1A). The asynchronous CP0A signal is available even when the system clock is not active. This allows the Comparator to operate and generate an output when the device is in some low power modes.

The comparator inputs may be connected to Port I/O pins or to other internal signals. Port pins may also be used to directly sense capacitive touch switches. See Application Note AN338 for details on Capacitive Touch Switch sensing.

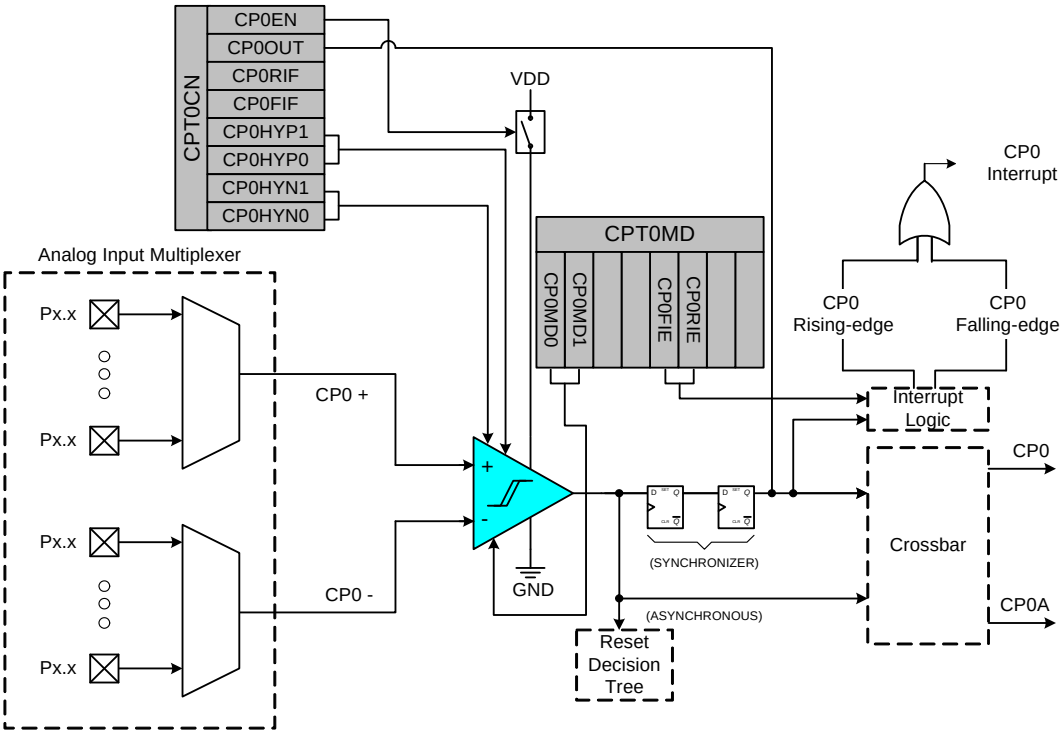

Figure 1.9. Comparator 0 Functional Block Diagram

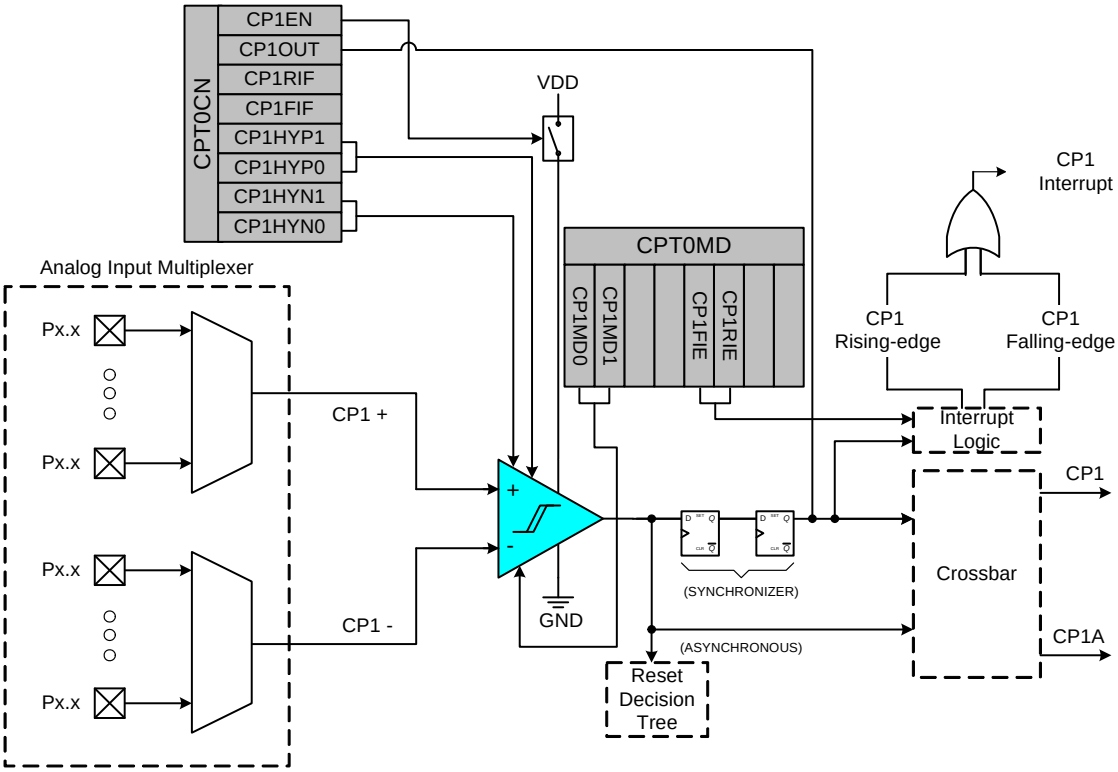

Figure 1.10. Comparator 1 Functional Block Diagram

2. Ordering Information

Table 2.1. Product Selection Guide

Ordering Part Number	MIPS (Peak)	Flash Memory (kB)	RAM (bytes)	SmaRTClock Real Time Clock	SMBus/I^2C	UART	Enhanced SPI	Timers (16-bit)	Programmable Counter Array	Digital Port I/Os	10-bit 300ksps ADC	Programmable Current Reference	Internal Voltage Reference	Temperature Sensor	Analog Comparators	Lead-free (RoHS Compliant)	C8051F9xx Plus Features*	Package
C8051F912-GM	25	16	768	✓	1	1	2	4	✓	16	✓	✓	✓	✓	2	✓	✓	QFN-24
C8051F912-GU	25	16	768	✓	1	1	2	4	✓	16	✓	✓	✓	✓	2	✓	✓	QSOP-24
C8051F911-GM	25	16	768	✓	1	1	2	4	✓	16	✓	✓	✓	✓	2	✓		QFN-24
C8051F911-GU	25	16	768	✓	1	1	2	4	✓	16	✓	✓	✓	✓	2	✓		QSOP-24
C8051F902-GM	25	8	768	✓	1	1	2	4	✓	16	✓	✓	✓	✓	2	✓	✓	QFN-24
C8051F902-GU	25	8	768	✓	1	1	2	4	✓	16	✓	✓	✓	✓	2	✓	✓	QSOP-24
C8051F901-GM	25	8	768	✓	1	1	2	4	✓	16	✓	✓	✓	✓	2	✓		QFN-24
C8051F901-GU	25	8	768	✓	1	1	2	4	✓	16	✓	✓	✓	✓	2	✓		QSOP-24

*The ‘F9xx Plus features are a set of enhancements that allow greater power efficiency and increased functionality. They include 12-bit ADC mode, PWM Enhanced IREF, ultra-low power SmaRTClock LFO, VBAT input voltage from 0.9 to 3.6 V, and VBAT battery low indicator. The ‘F9xx Plus features are described in detail in “AN431: F93x-F90x Software Porting Guide.”

3. Pinout and Package Definitions

Table 3.1. Pin Definitions for the C8051F91x-C8051F90x

Name	Pin Numbers		Type	Description
	‘F912-GM ‘F902-GM ‘F911-GM ‘F901-GM	‘F912-GU ‘F902-GU ‘F911-GU ‘F901-GU		
VBAT	5	8	P In	Battery Supply Voltage. C8051F911/01 devices: Must be 0.9 to 1.8 V in single-cell battery mode and 1.8 to 3.6 V in dual-cell battery mode. C8051F912/02 devices: Must be 0.9 to 3.6 V in single-cell battery mode and 1.8 to 3.6 V in dual-cell battery mode.
V_{DD} / DC+	3	6	P In P Out	Power Supply Voltage. Must be 1.8 to 3.6 V. This supply voltage is not required in low power sleep mode. This voltage must always be $\geq$ VBAT. Positive output of the dc-dc converter. In single-cell battery mode, a 1uF ceramic capacitor is required between DC+ and DC–. This pin can supply power to external devices when operating in single-cell battery mode.
DC– / GND	1	4	P In G	DC-DC converter return current path. In single-cell battery mode, this pin is typically not connected to ground. In dual-cell battery mode, this pin must be connected directly to ground.
GND	2	5	G	Required Ground.
DCEN	4	7	P In G	DC-DC Enable Pin. In single-cell battery mode, this pin must be connected to VBAT through a 0.68 µH inductor. In dual-cell battery mode, this pin must be connected directly to ground.
$\overline{RST}$/ C2CK	6	9	D I/O D I/O	Device Reset. Open-drain output of internal POR or V_{DD} monitor. An external source can initiate a system reset by driving this pin low for at least 15 µs. A 1 kΩ to 5 kΩ pullup to V_{DD} is recommended. See Section “18. Reset Sources” on page 178 Section for a complete description. Clock signal for the C2 Debug Interface.
***Note:** Available only on the C8051F912/02.				

Table 3.1. Pin Definitions for the C8051F91x-C8051F90x (Continued)

Name	Pin Numbers		Type	Description
	‘F912-GM ‘F902-GM ‘F911-GM ‘F901-GM	‘F912-GU ‘F902-GU ‘F911-GU ‘F901-GU		
P2.7/ C2D	7	10	D I/O D I/O	Port 2.7. This pin can only be used as GPIO. The Crossbar cannot route signals to this pin and it cannot be configured as an analog input. See Port I/O Section for a complete description. Bi-directional data signal for the C2 Debug Interface.
XTAL3	9	12	A In	SmaRTClock Oscillator Crystal Input. See Section 20 for a complete description.
XTAL4	8	11	A Out	SmaRTClock Oscillator Crystal Output. See Section 20 for a complete description.
P0.0 V_{REF}	24	3	D I/O or A In A In A Out	Port 0.0. See Port I/O Section for a complete description. External V_{REF} Input. Internal V_{REF} Output. External V_{REF} decoupling capacitors are recommended. See Section “5.9. Voltage and Ground Reference Options” on page 87.
P0.1 AGND	23	2	D I/O or A In G	Port 0.1. See Port I/O Section for a complete description. Optional Analog Ground. See Section “5.9. Voltage and Ground Reference Options” on page 87.
P0.2 XTAL1 RTCOUT*	22	1	D I/O or A In A In	Port 0.2. See Port I/O Section for a complete description. External Clock Input. This pin is the external oscillator return for a crystal or resonator. See Section “19. Clocking Sources” on page 186. Buffered SmaRTClock oscillator output.

***Note:** Available only on the C8051F912/02.

Table 3.1. Pin Definitions for the C8051F91x-C8051F90x (Continued)

Name	Pin Numbers		Type	Description
	‘F912-GM ‘F902-GM ‘F911-GM ‘F901-GM	‘F912-GU ‘F902-GU ‘F911-GU ‘F901-GU		
P0.3	21	24	D I/O or A In	Port 0.3. See Section “21. Port Input/Output” on page 214 for a complete description.
XTAL2			A Out	External Clock Output. This pin is the excitation driver for an external crystal or resonator.
			D In	External Clock Input. This pin is the external clock input in external CMOS clock mode.
			A In	External Clock Input. This pin is the external clock input in capacitor or RC oscillator configurations. See Section “19. Clocking Sources” on page 186 for complete details.
WAKEOUT*				Wake-up request signal to wake up external devices (e.g. an external DC-DC converter).
P0.4	20	23	D I/O or A In	Port 0.4. See Section “21. Port Input/Output” on page 214 for a complete description.
TX			D Out	UART TX Pin. See Section “21. Port Input/Output” on page 214.
P0.5	19	22	D I/O or A In	Port 0.5. See Section “21. Port Input/Output” on page 214 for a complete description.
RX			D In	UART RX Pin. See Section “21. Port Input/Output” on page 214.
P0.6	18	21	D I/O or A In	Port 0.6. See Section “21. Port Input/Output” on page 214 for a complete description.
CNVSTR			D In	External Convert Start Input for ADC0. See Section “5.7. ADC0 Analog Multiplexer” on page 82 for a complete description.
P0.7	17	20	D I/O or A In	Port 0.7. See Section “21. Port Input/Output” on page 214 for a complete description.
IREF0			A Out	IREF0 Output. See IREF Section for complete description.
P1.0	16	19	D I/O or A In	Port 1.0. See Section “21. Port Input/Output” on page 214 for a complete description. May also be used as SCK for SPI1.
***Note:** Available only on the C8051F912/02.				

Table 3.1. Pin Definitions for the C8051F91x-C8051F90x (Continued)

Name	Pin Numbers		Type	Description
	‘F912-GM ‘F902-GM ‘F911-GM ‘F901-GM	‘F912-GU ‘F902-GU ‘F911-GU ‘F901-GU		
P1.1	15	18	D I/O or A In	Port 1.1. See Section “21. Port Input/Output” on page 214 for a complete description. May also be used as MISO for SPI1.
P1.2	14	17	D I/O or A In	Port 1.2. See Section “21. Port Input/Output” on page 214 for a complete description. May also be used as MOSI for SPI1.
P1.3	13	16	D I/O or A In	Port 1.3. See Section “21. Port Input/Output” on page 214 for a complete description. May also be used as NSS for SPI1.
P1.4	12	15	D I/O or A In	Port 1.4. See Section “21. Port Input/Output” on page 214 for a complete description.
P1.5	11	14	D I/O or A In	Port 1.5. See Section “21. Port Input/Output” on page 214 for a complete description.
P1.6	10	13	D I/O or A In	Port 1.6. See Section “21. Port Input/Output” on page 214 for a complete description.
***Note:** Available only on the C8051F912/02.				

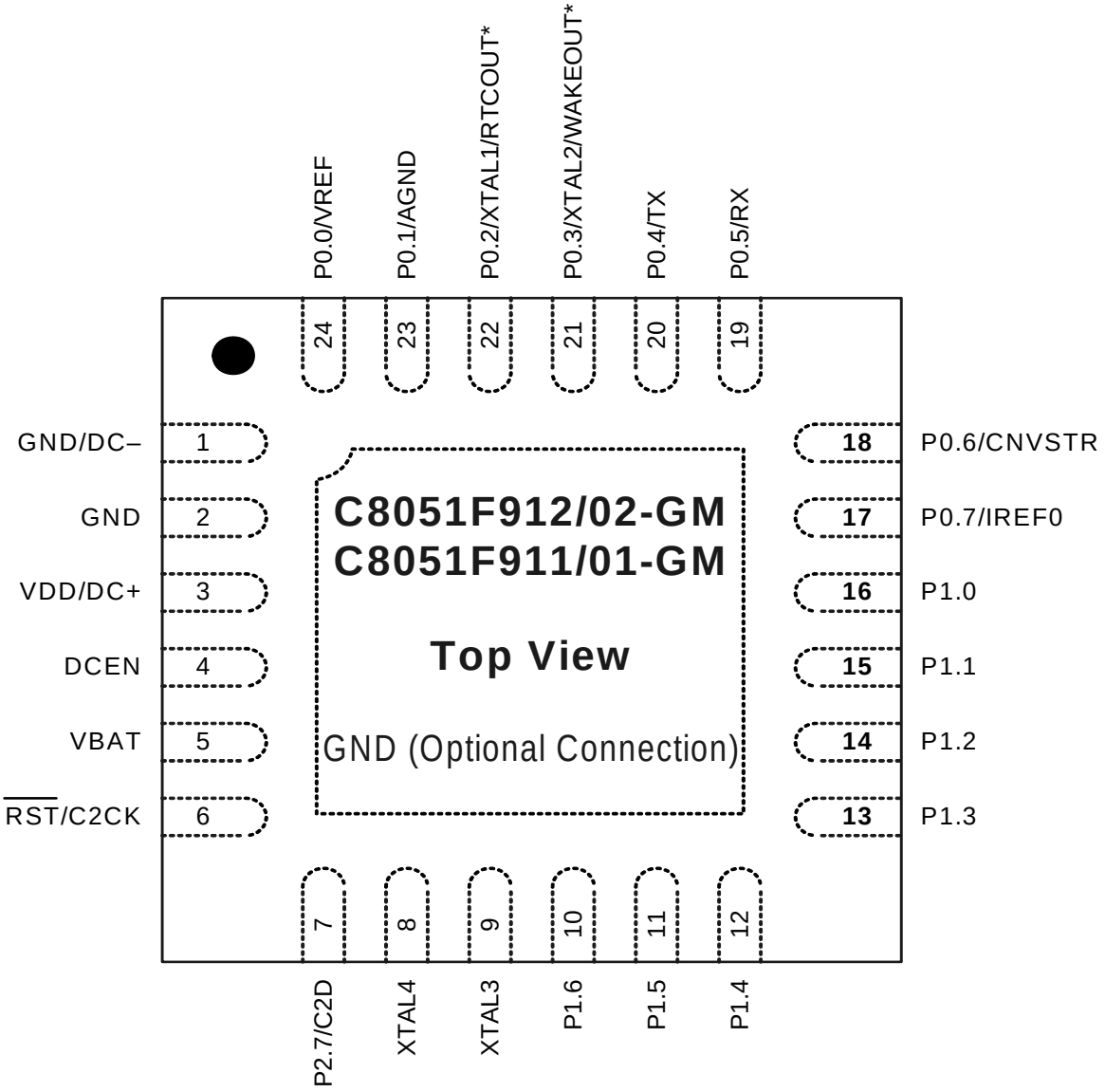

***Note:** Signal only available on 'F912 and 'F902 devices.

Figure 3.1. QFN-24 Pinout Diagram (Top View)

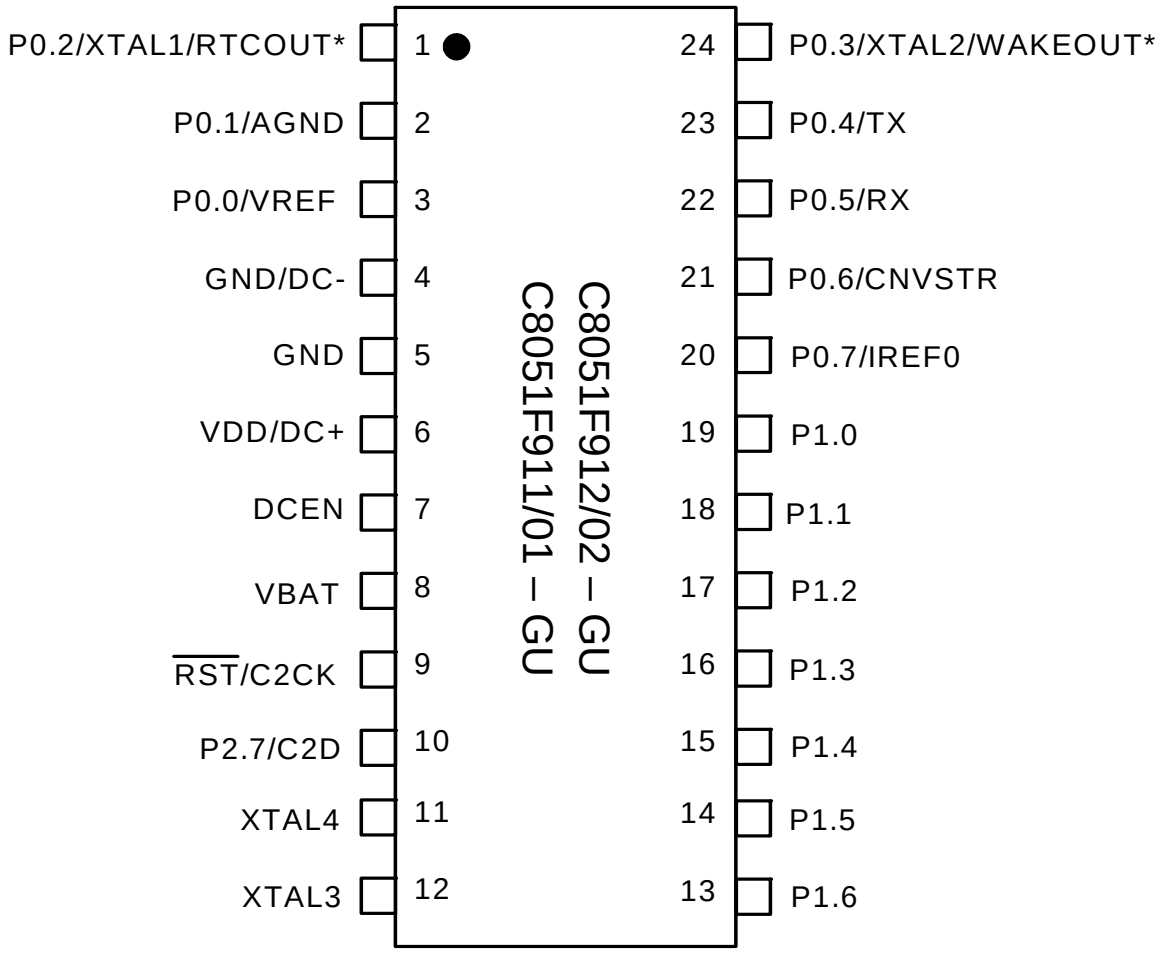

***Note:** Signal only available on 'F912 and 'F902 devices.

Figure 3.2. QSOP-24 Pinout Diagram F912 (Top View)

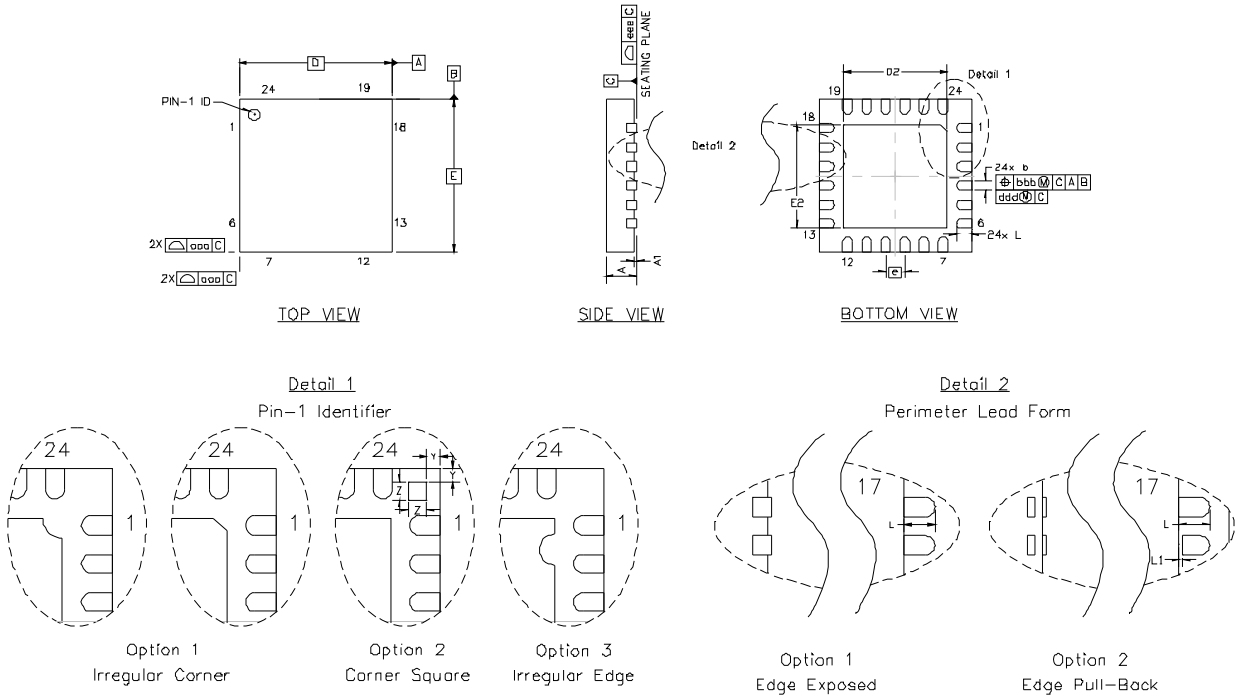

Figure 3.3. QFN-24 Package Drawing

Table 3.2. QFN-24 Package Dimensions

Dimension	Min	Typ	Max	Dimension	Min	Typ	Max
A	0.70	0.75	0.80	L	0.30	0.40	0.50
A1	0.00	0.02	0.05	L1	0.00	—	0.15
b	0.18	0.25	0.30	aaa	—	—	0.15
D	4.00 BSC			bbb	—	—	0.10
D2	2.55	2.70	2.80	ddd	—	—	0.05
e	0.50 BSC			eee	—	—	0.08
E	4.00 BSC			Z	—	0.24	—
E2	2.55	2.70	2.80	Y	—	0.18	—

Notes:

1. All dimensions shown are in millimeters (mm) unless otherwise noted.
2. Dimensioning and Tolerancing per ANSI Y14.5M-1994.
3. This drawing conforms to the JEDEC Solid State Outline MO-220, variation WGGD except for custom features D2, E2, Z, Y, and L which are toleranced per supplier designation.
4. Recommended card reflow profile is per the JEDEC/IPC J-STD-020 specification for Small Body Components.

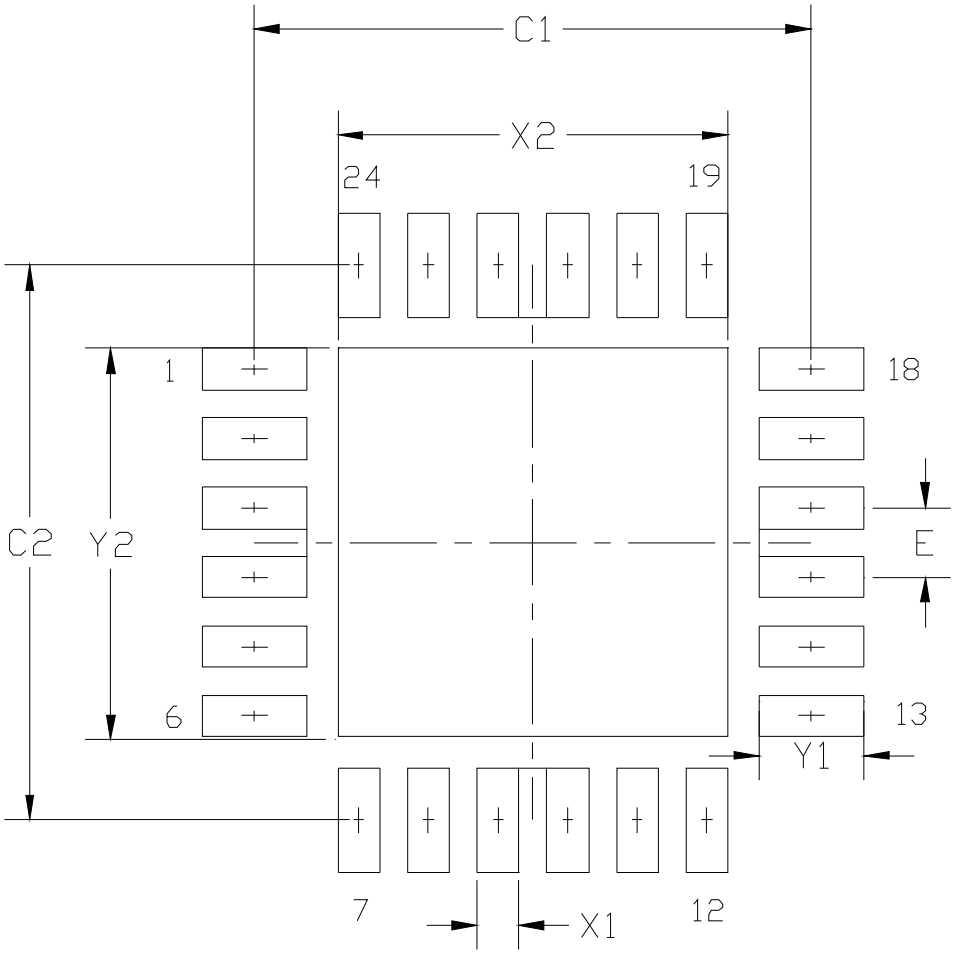

Figure 3.4. Typical QFN-24 Landing Diagram

Table 3.3. PCB Land Pattern

Dimension	MIN	MAX
C1	3.90	4.00
C2	3.90	4.00
E	0.50 BSC	
X1	0.20	0.30
X2	2.70	2.80
Y1	0.65	0.75
Y2	2.70	2.80

Notes:

General

1. All dimensions shown are in millimeters (mm) unless otherwise noted.
2. This Land Pattern Design is based on the IPC-7351 guidelines.

Solder Mask Design

1. All metal pads are to be non-solder mask defined (NSMD). Clearance between the solder mask and the metal pad is to be 60 µm minimum, all the way around the pad.

Stencil Design

1. A stainless steel, laser-cut and electro-polished stencil with trapezoidal walls should be used to assure good solder paste release.
2. The stencil thickness should be 0.125mm (5 mils).
3. The ratio of stencil aperture to land pad size should be 1:1 for all perimeter pads.
4. A 2 x 2 array of 1.0 x 1.0 mm square openings on 1.30 mm pitch should be used for the center ground pad.

Card Assembly

1. A No-Clean, Type-3 solder paste is recommended.
1. The recommended card reflow profile is per the JEDEC/IPC J-STD-020 specification for Small Body Components.

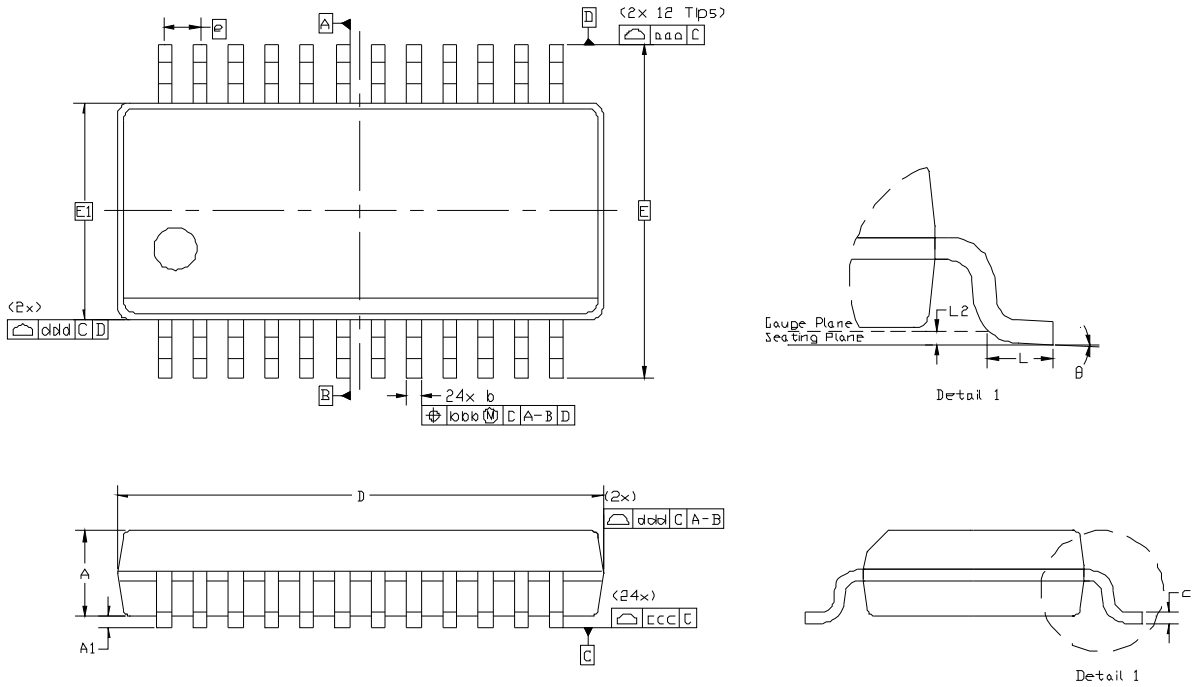

Figure 3.5. QSOP-24 Package Diagram

Table 3.4. QSOP-24 Package Dimensions

Dimension	Min	Typ	Max	Dimension	Min	Typ	Max
A	—	—	1.75	L	0.40	—	1.27
A1	0.10	—	0.25	L2	0.25 BSC		
b	0.20	—	0.30	θ	0º	—	8º
c	0.10	—	0.25	aaa	0.20		
D	8.65 BSC.			bbb	0.18		
E	6.00 BSC			ccc	0.10		
E1	3.90 BSC			ddd	0.10		
e	0.635 BSC						

Notes:
1. All dimensions shown are in millimeters (mm) unless otherwise noted.
2. Dimensioning and Tolerancing per ANSI Y14.5M-1994.
3. This drawing conforms to JEDEC outline MO-147, variation AE.
4. Recommended card reflow profile is per the JEDEC/IPC J-STD-020 specification for Small Body Components.

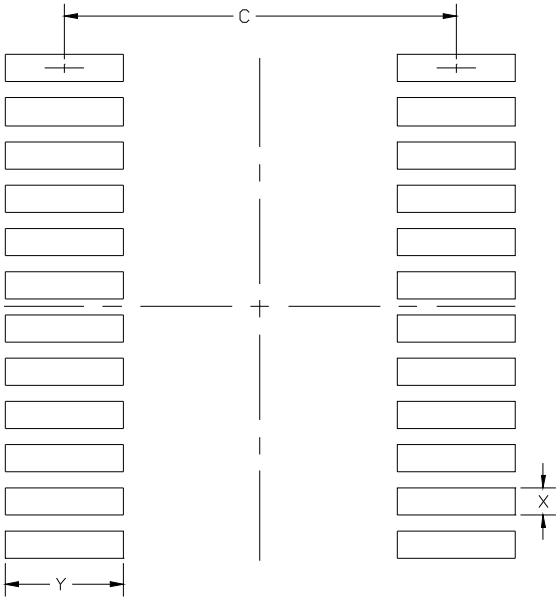

Figure 3.6. QSOP-24 Landing Diagram

Table 3.5. PCB Land Pattern

Dimension	MIN	MAX
C	5.20	5.30
X	0.30	0.40
Y	1.50	1.60

Notes:

General

1. All dimensions shown are in millimeters (mm) unless otherwise noted.
2. This Land Pattern Design is based on the IPC-7351 guidelines.

Solder Mask Design

1. All metal pads are to be non-solder mask defined (NSMD). Clearance between the solder mask and the metal pad is to be 60 µm minimum, all the way around the pad.

Stencil Design

1. A stainless steel, laser-cut and electro-polished stencil with trapezoidal walls should be used to assure good solder paste release.
2. The stencil thickness should be 0.125mm (5 mils).
3. The ratio of stencil aperture to land pad size should be 1:1 for all perimeter pads.

Card Assembly

1. A No-Clean, Type-3 solder paste is recommended.
2. The recommended card reflow profile is per the JEDEC/IPC J-STD-020 specification for Small Body Components.

4. Electrical Characteristics

Throughout the Electrical Characteristics chapter, “VDD” refers to the VDD/DC+ Supply Voltage.

Blue indicates a feature only available on ‘F912 and ‘F902 devices.

4.1. Absolute Maximum Specifications

Table 4.1. Absolute Maximum Ratings

Parameter	Conditions	Min	Typ	Max	Units
Ambient temperature under bias		–55	—	125	°C
Storage Temperature		–65	—	150	°C
Voltage on any Port I/O Pin or $\overline{\text{RST}}$ with respect to GND	VDD > 2.2 V VDD < 2.2 V	–0.3 –0.3	— —	5.8 VDD + 3.6	V
Voltage on VBAT with respect to GND	One-Cell Mode (F912/02 One-Cell Mode (F911/01) Two-Cell Mode	–0.3 –0.3 –0.3	— — —	4.0 2.0 4.0	V
Voltage on VDD/DC+ with respect to GND		–0.3	—	4.0	V
Maximum total current through VBAT, DCEN, VDD/DC+ or GND		—	—	500	mA
Maximum current through $\overline{\text{RST}}$ or any Port pin		—	—	100	mA
Maximum total current through all Port pins		—	—	200	mA
DC-DC Converter Output Power		—	—	110	mW

Note: Stresses above those listed under “Absolute Maximum Ratings” may cause permanent damage to the device. This is a stress rating only and functional operation of the devices at those or any other conditions above those indicated in the operation listings of this specification is not implied. Exposure to maximum rating conditions for extended periods may affect device reliability.

4.2. Electrical Characteristics

Table 4.2. Global Electrical Characteristics

–40 to +85 °C, 25 MHz system clock unless otherwise specified. See "AN358: Optimizing Low Power Operation of the 'F9xx" for details on how to achieve the supply current specifications listed in this table.

Parameter	Conditions	Min	Typ	Max	Units
Battery Supply Voltage (VBAT)	One-Cell Mode (F912/02) One-Cell Mode (F911/01) Two-Cell Mode	0.9 0.9 1.8	1.2 1.2 2.4	3.6 1.8 3.6	V
Supply Voltage (VDD/DC+)	One-Cell Mode Two-Cell Mode	1.8 1.8	1.9 2.4	3.6 3.6	V
Minimum RAM Data Retention Voltage[1]	VDD (not in Sleep Mode) VBAT (in Sleep Mode)	— —	1.4 0.3	— 0.5	V
SYSCLK (System Clock)[2]		0	—	25	MHz
T_{SYSH} (SYSCLK High Time)		18	—	—	ns
T_{SYSL} (SYSCLK Low Time)		18	—	—	ns
Specified Operating Temperature Range		–40	—	+85	°C

Table 4.2. Global Electrical Characteristics (Continued)

–40 to +85 °C, 25 MHz system clock unless otherwise specified. See "AN358: Optimizing Low Power Operation of the 'F9xx" for details on how to achieve the supply current specifications listed in this table.

Parameter	Conditions	Min	Typ	Max	Units
Digital Supply Current—CPU Active (Normal Mode, fetching instructions from Flash)					
I_{DD} [3, 4, 5, 6]	V_{DD} = 1.8–3.6 V, F = 24.5 MHz (includes precision oscillator current)	—	4.0	5.0	mA
	V_{DD} = 1.8–3.6 V, F = 20 MHz (includes low power oscillator current)	—	3.4	—	mA
	V_{DD} = 1.8 V, F = 1 MHz V_{DD} = 3.6 V, F = 1 MHz (includes external oscillator/GPIO current)	— —	265 305	— —	µA µA
	V_{DD} = 1.8–3.6 V, F = 32.768 kHz (includes SmaRTClock oscillator current)	—	84	—	µA
I_{DD} Frequency Sensitivity[3, 5, 6]	V_{DD} = 1.8–3.6 V, T = 25 °C, F < 14 MHz (Flash oneshot active, see Section 13.6)	—	191	—	µA/MHz
	V_{DD} = 1.8–3.6 V, T = 25 °C, F > 14 MHz (Flash oneshot bypassed, see Section 13.6)	—	102	—	µA/MHz
Digital Supply Current—CPU Inactive (Idle Mode, not fetching instructions from Flash)					
I_{DD}[4, 6, 7]	V_{DD} = 1.8–3.6 V, F = 24.5 MHz (includes precision oscillator current)	—	2.1	3.0	mA
	V_{DD} = 1.8–3.6 V, F = 20 MHz (includes low power oscillator current)	—	1.6	—	mA
	V_{DD} = 1.8 V, F = 1 MHz V_{DD} = 3.6 V, F = 1 MHz (includes external oscillator/GPIO current)	— —	160 185	— —	µA µA
	V_{DD} = 1.8–3.6 V, F = 32.768 kHz (includes SmaRTClock oscillator current)	—	82	—	µA
I_{DD} Frequency Sensitivity[1,6,7]	V_{DD} = 1.8–3.6 V, T = 25 °C	—	79	—	µA/MHz

Table 4.2. Global Electrical Characteristics (Continued)

–40 to +85 °C, 25 MHz system clock unless otherwise specified. See "AN358: Optimizing Low Power Operation of the 'F9xx" for details on how to achieve the supply current specifications listed in this table.

Parameter	Conditions	Min	Typ	Max	Units
Digital Supply Current—Suspend and Sleep Mode					
Digital Supply Current[6] (Suspend Mode)	V_{DD} = 1.8–3.6 V, two-cell mode	—	77	—	µA
Digital Supply Current (Sleep Mode, SmaRTClock running, 32.768 kHz crystal)	1.8 V, T = 25 °C 3.0 V, T = 25 °C 3.6 V, T = 25 °C 1.8 V, T = 85 °C 3.0 V, T = 85 °C 3.6 V, T = 85 °C (includes SmaRTClock oscillator and VBAT Supply Monitor)	— — — — — —	0.60 0.75 0.85 1.30 1.60 1.90	— — — — — —	µA
Digital Supply Current[8] (Sleep Mode, SmaRTClock running, **internal LFO**)	1.8 V, T = 25 °C (includes SmaRTClock oscillator and VBAT Supply Monitor)	—	0.3	—	µA
Digital Supply Current (Sleep Mode)	1.8 V, T = 25 °C 3.0 V, T = 25 °C 3.6 V, T = 25 °C 1.8 V, T = 85 °C 3.0 V, T = 85 °C 3.6 V, T = 85 °C (includes VBAT supply monitor)	— — — — — —	0.05 0.08 0.12 0.75 0.90 1.20	— — — — — —	µA
Digital Supply Current (Sleep Mode, **VBAT Supply Monitor Disabled**)[9]	1.8 V, T = 25 °C	—	0.01	—	µA

Table 4.2. Global Electrical Characteristics (Continued)

–40 to +85 °C, 25 MHz system clock unless otherwise specified. See "AN358: Optimizing Low Power Operation of the ‘F9xx" for details on how to achieve the supply current specifications listed in this table.

Parameter	Conditions	Min	Typ	Max	Units

Notes:

1. Based on device characterization data; Not production tested.
2. SYSCLK must be at least 32 kHz to enable debugging.
3. Digital Supply Current depends upon the particular code being executed. The values in this table are obtained with the CPU executing an “sjmp $” loop, which is the compiled form of a while(1) loop in C. One iteration requires 3 CPU clock cycles, and the Flash memory is read on each cycle. The supply current will vary slightly based on the physical location of the sjmp instruction and the number of Flash address lines that toggle as a result. In the worst case, current can increase by up to 30% if the sjmp loop straddles a 64-byte Flash address boundary (e.g., 0x007F to 0x0080). Real-world code with larger loops and longer linear sequences will have few transitions across the 64-byte address boundaries.
4. Includes oscillator and regulator supply current.
5. IDD can be estimated for frequencies $\leq$14 MHz by simply multiplying the frequency of interest by the frequency sensitivity number for that range, then adding an offset of 90 µA. When using these numbers to estimate I_{DD} for >14 MHz, the estimate should be the current at 25 MHz minus the difference in current indicated by the frequency sensitivity number. For example: V_{DD} = 3.0 V; F = 20 MHz, I_{DD} = 4 mA – (25 MHz – 20 MHz) x 0.102 mA/MHz = 3.5 mA assuming the same oscillator setting.
6. The supply current specifications in Table 4.2 are for two cell mode. The VBAT current in one-cell mode can be estimated using the following equation:

$$\text{VBAT Current (one-cell mode)} = \frac{\text{Supply Voltage} \times \text{Supply Current (two-cell mode)}}{\text{DC-DC Converter Efficiency} \times \text{VBAT Voltage}}$$

   The VBAT Voltage is the voltage at the VBAT pin, typically 0.9 to 1.8 V.
   The Supply Current (two-cell mode) is the data sheet specification for supply current.
   The Supply Voltage is the voltage at the VDD/DC+ pin, typically 1.8 to 3.3 V (default = 1.9 V).
   The DC-DC Converter Efficiency can be estimated using Figure 4.3–Figure 4.5.
7. Idle IDD can be estimated by taking the current at 25 MHz minus the difference in current indicated by the frequency sensitivity number. For example: V_{DD} = 3.0 V; F = 5 MHz, Idle I_{DD} = 2.1 mA – (25 MHz – 5 MHz) x 0.079 mA/MHz = 0.52 mA.
8. Internal LFO only available on ‘F912 and ‘F902 devices.
9. Ability to disable VBAT supply monitor only available on ‘F912 and ‘F902 devices.

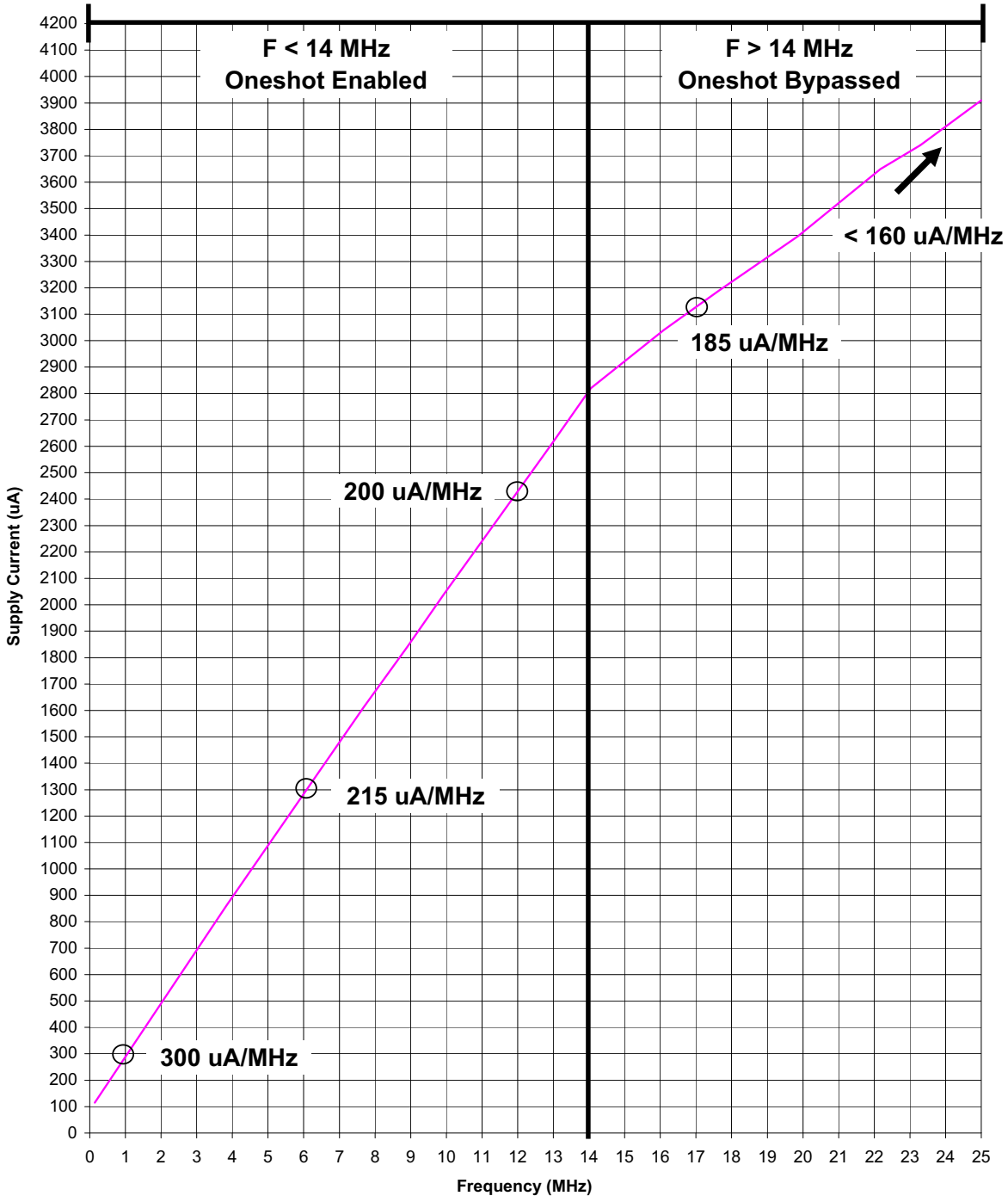

Figure 4.1. Active Mode Current (External CMOS Clock)

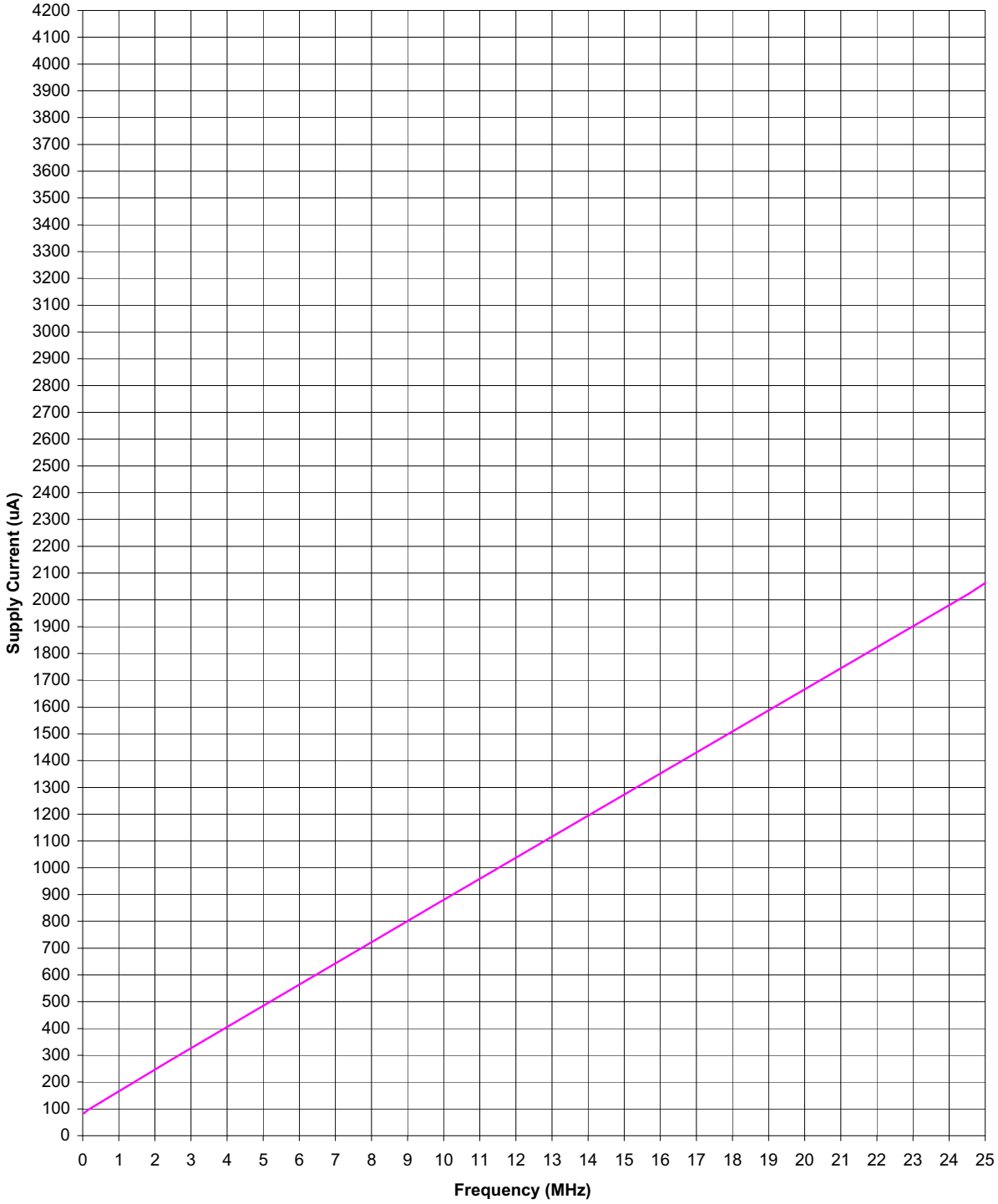

Figure 4.2. Idle Mode Current (External CMOS Clock)

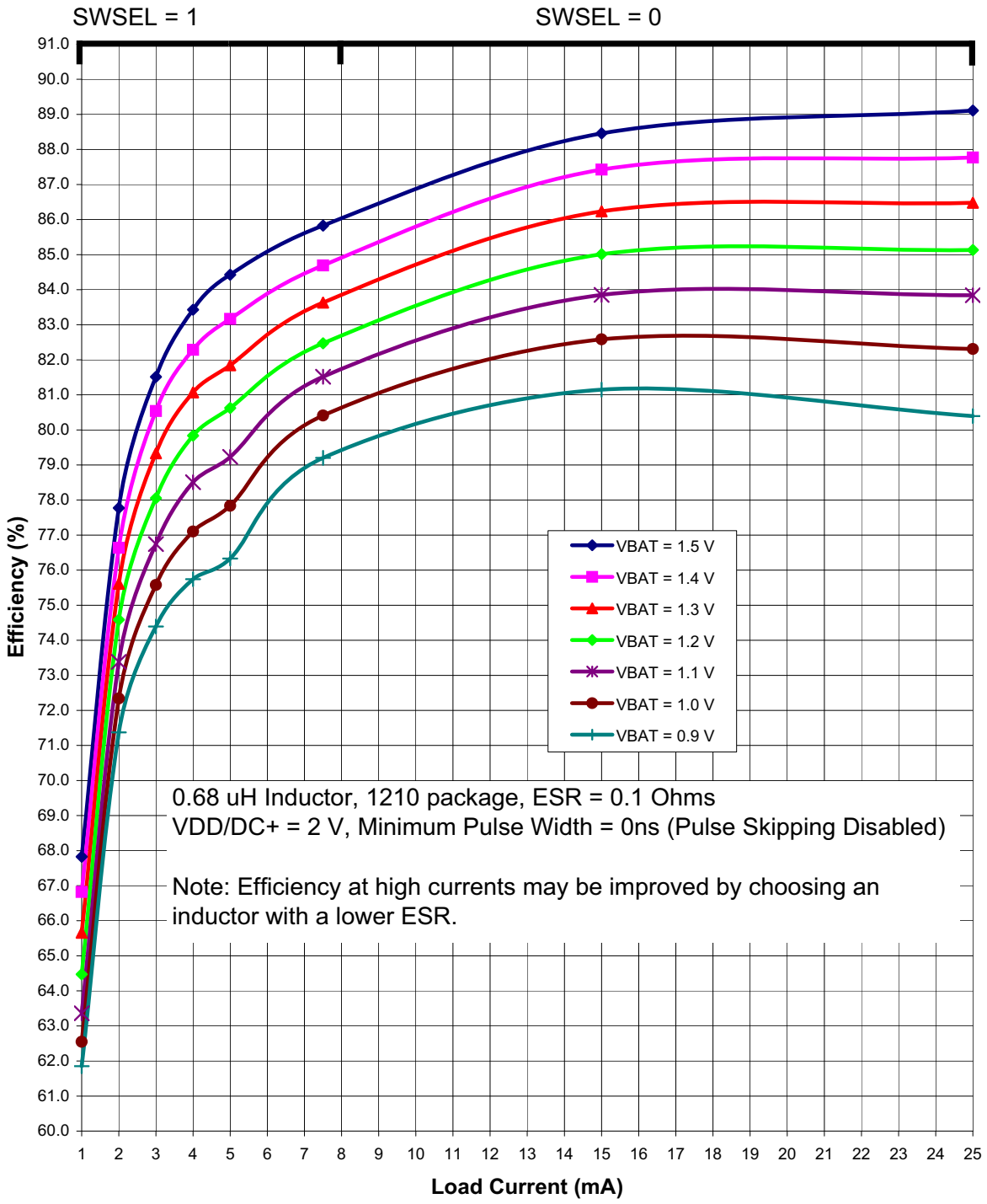

Figure 4.3. Typical DC-DC Converter Efficiency (High Current, VDD/DC+ = 2 V)

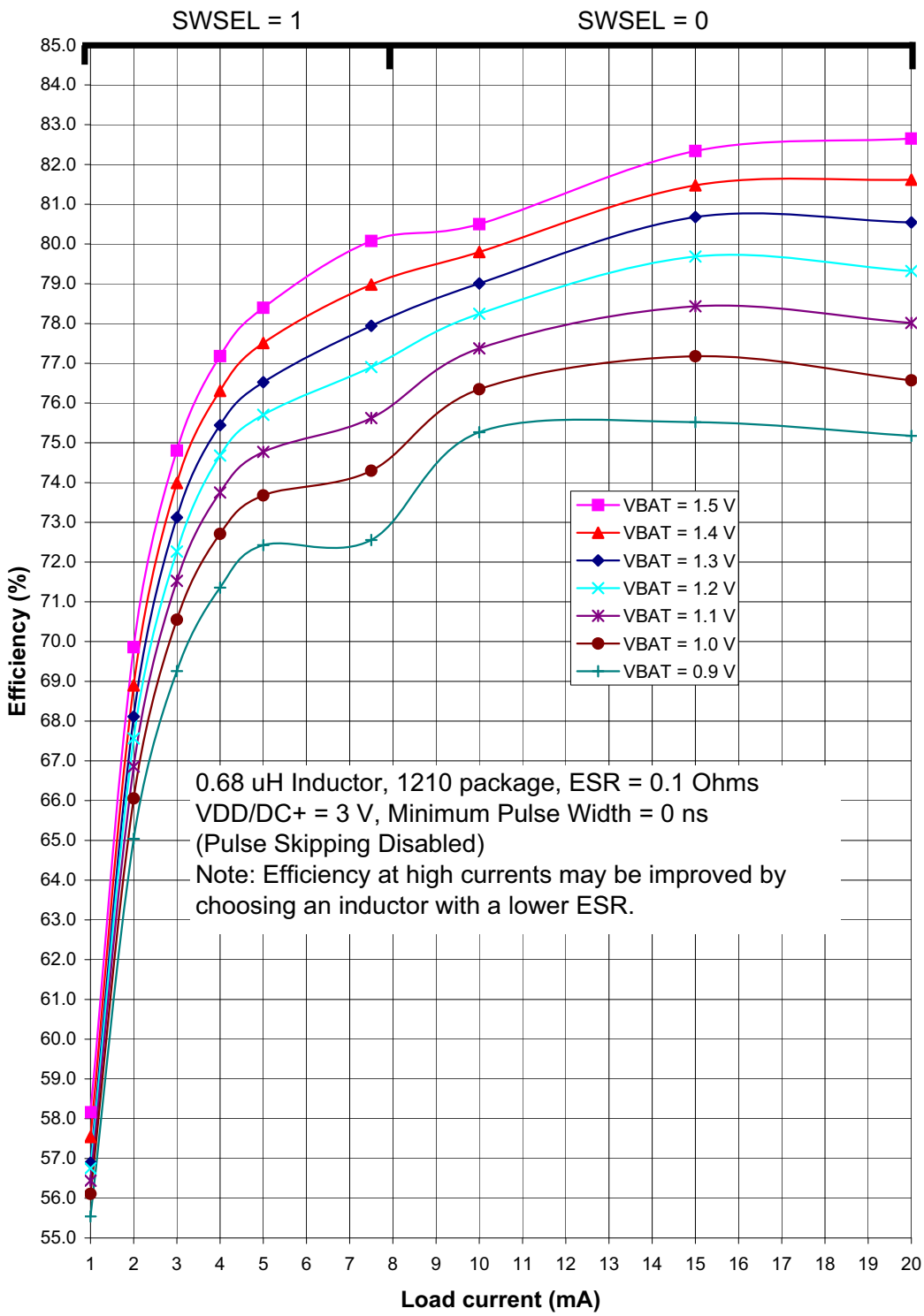

Figure 4.4. Typical DC-DC Converter Efficiency (High Current, VDD/DC+ = 3 V)

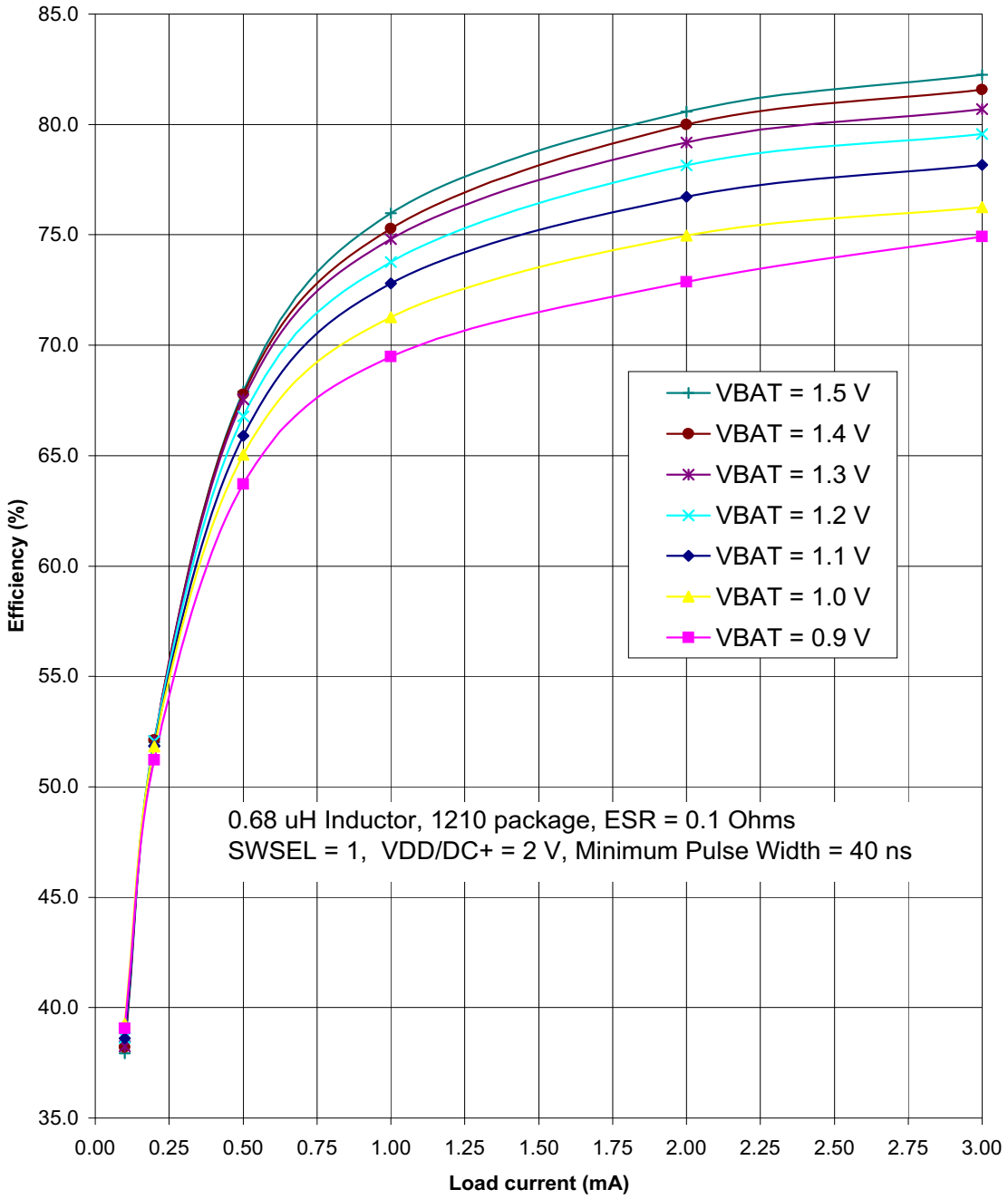

Figure 4.5. Typical DC-DC Converter Efficiency (Low Current, VDD/DC+ = 2 V)

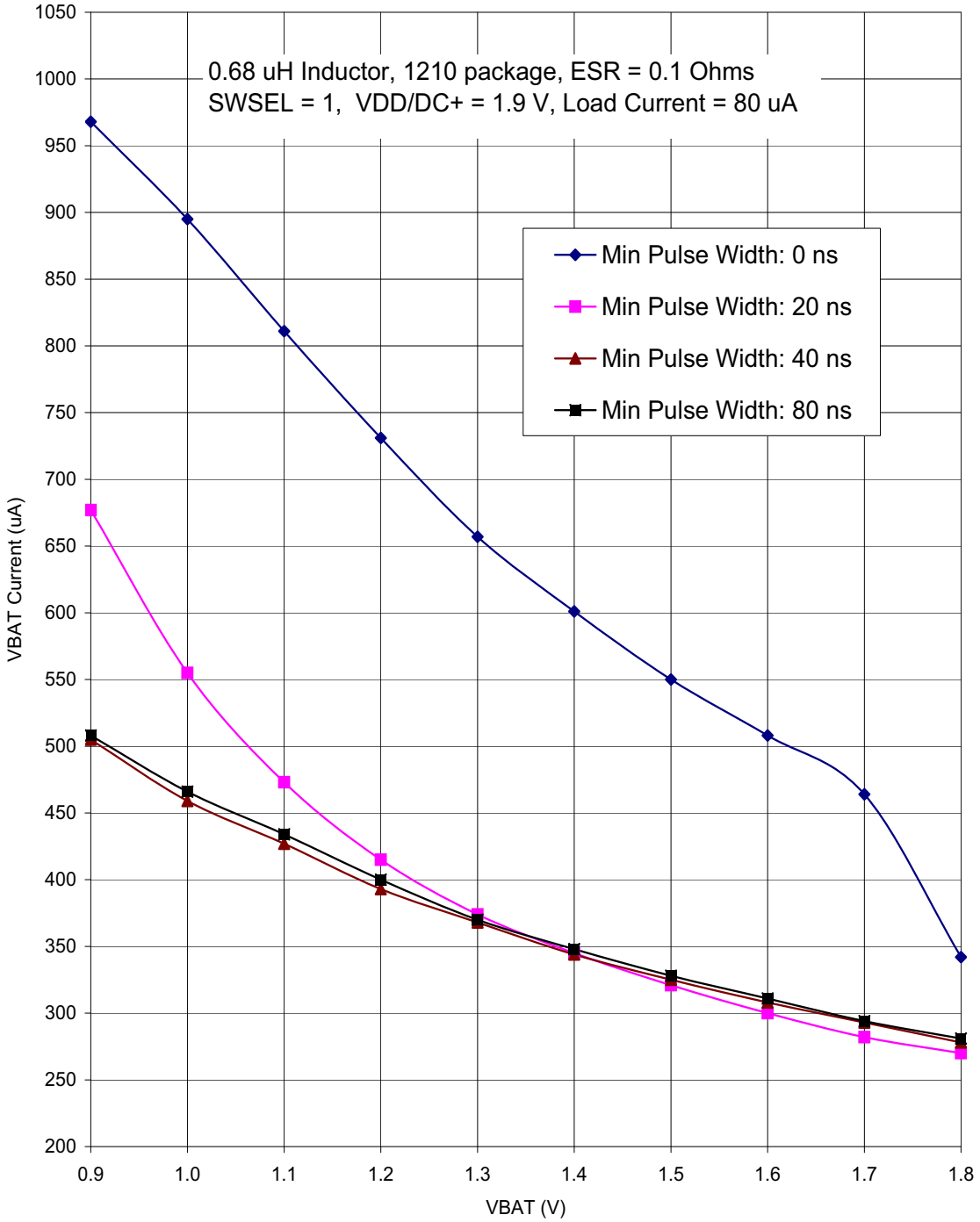

Figure 4.6. Typical One-Cell Suspend Mode Current

Table 4.3. Port I/O DC Electrical Characteristics

V_{DD} = 1.8 to 3.6 V, –40 to +85 °C unless otherwise specified.

Parameters	Conditions	Min	Typ	Max	Units
Output High Voltage	High Drive Strength, PnDRV.n = 1				
	IOH = –3 mA, Port I/O push-pull	V_{DD} – 0.7	—	—	
	IOH = –10 µA, Port I/O push-pull	V_{DD} – 0.1	—	—	
	IOH = –10 mA, Port I/O push-pull		See Chart		
					V
	Low Drive Strength, PnDRV.n = 0				
	IOH = –1 mA, Port I/O push-pull	V_{DD} – 0.7	—	—	
	IOH = –10 µA, Port I/O push-pull	V_{DD} – 0.1	—	—	
	IOH = –3 mA, Port I/O push-pull	—	See Chart	—	
Output Low Voltage	High Drive Strength, PnDRV.n = 1				
	I_{OL} = 8.5 mA	—	—	0.6	
	I_{OL} = 10 µA	—	—	0.1	
	I_{OL} = 25 mA	—	See Chart	—	
					V
	Low Drive Strength, PnDRV.n = 0				
	I_{OL} = 1.4 mA	—	—	0.6	
	I_{OL} = 10 µA	—	—	0.1	
	I_{OL} = 4 mA	—	See Chart	—	
Input High Voltage	V_{DD} = 2.0 to 3.6 V	V_{DD} – 0.6	—	—	V
	V_{DD} = 0.9 to 2.0 V	0.7 x VDD	—	—	V
Input Low Voltage	V_{DD} = 2.0 to 3.6 V	—	—	0.6	V
	V_{DD} = 0.9 to 2.0 V	—	—	0.3 x VDD	V
Input Leakage Current	Weak Pullup Off	—	—	±1	
	Weak Pullup On, V_{IN} = 0 V, V_{DD} = 1.8 V	—	4	—	µA
	Weak Pullup On, Vin = 0 V, V_{DD} = 3.6 V	—	20	35	

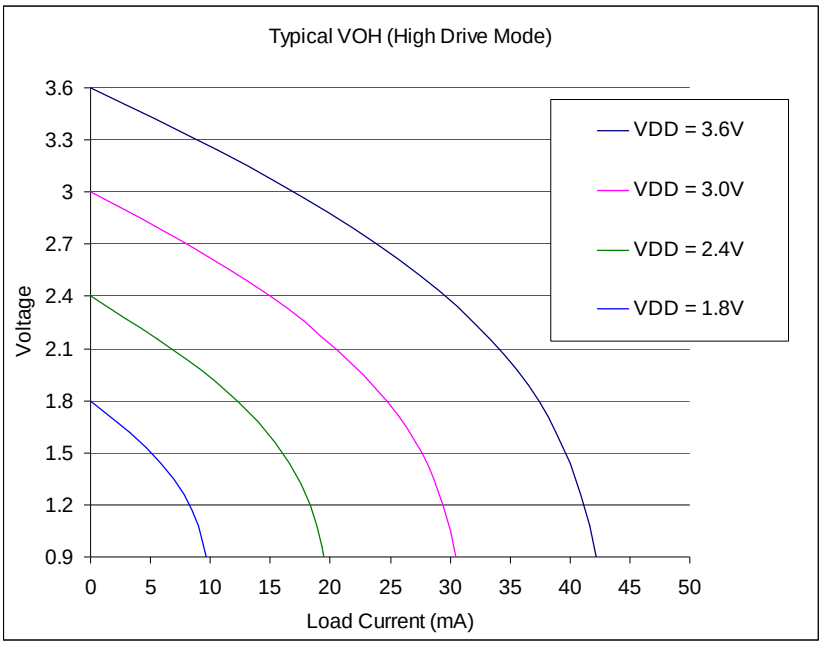

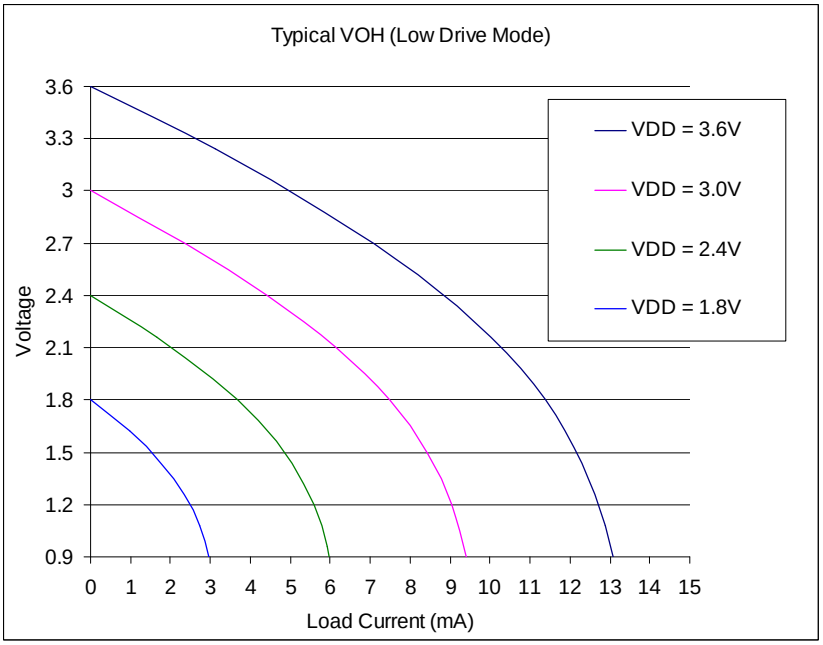

Figure 4.7. Typical VOH Curves, 1.8–3.6 V

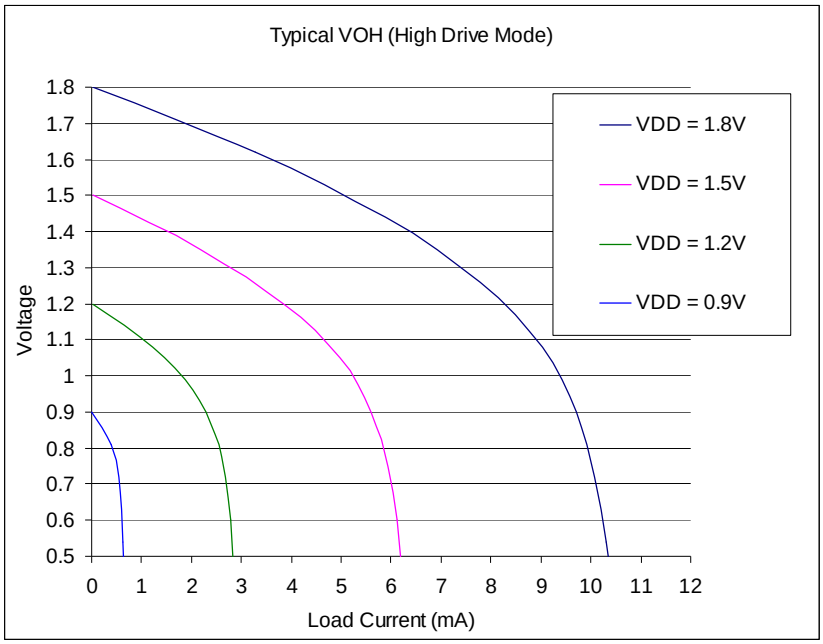

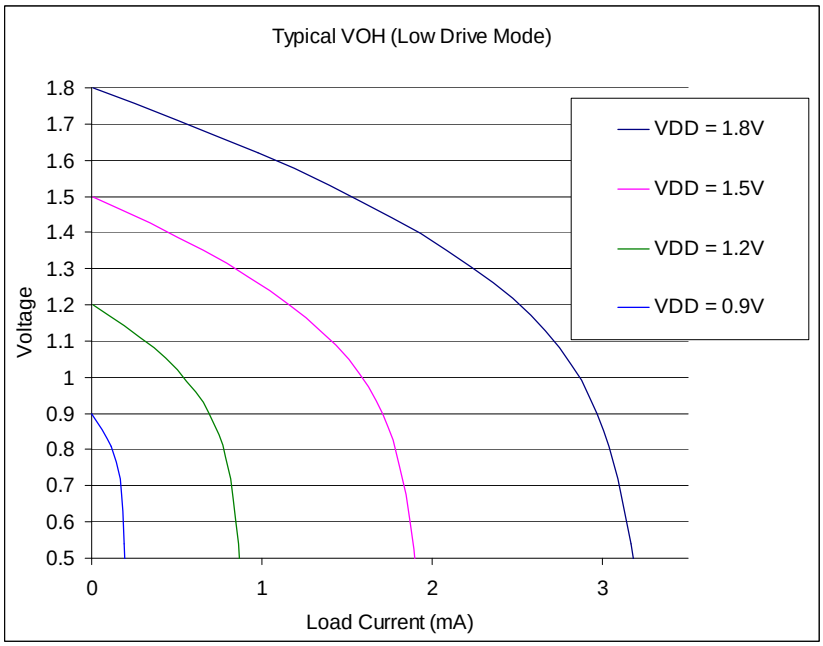

Figure 4.8. Typical VOH Curves, 0.9–1.8 V

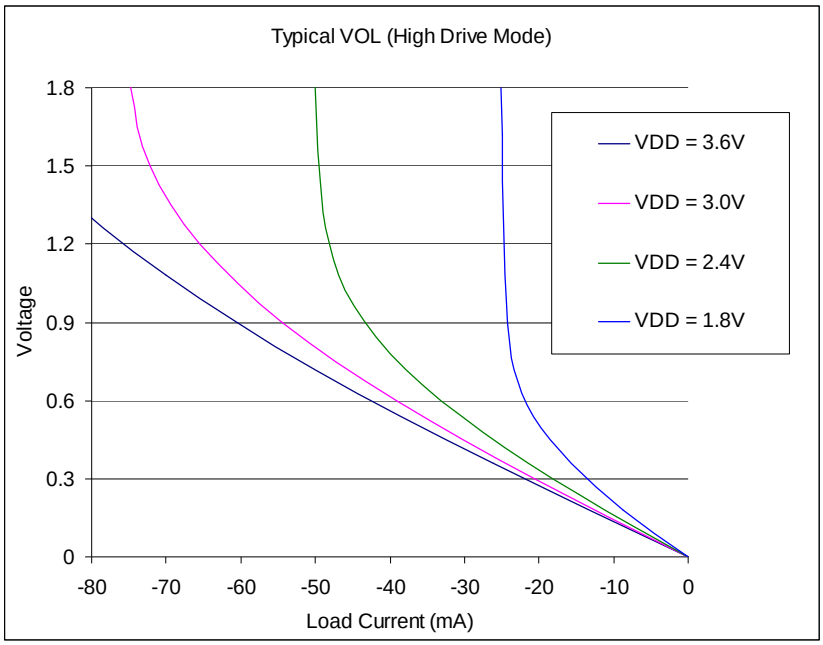

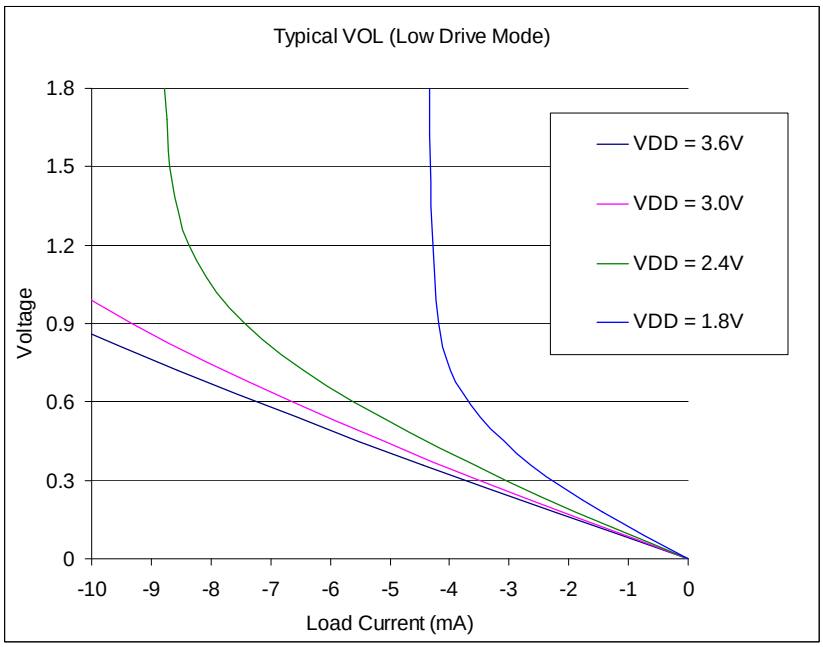

Figure 4.9. Typical VOL Curves, 1.8–3.6 V

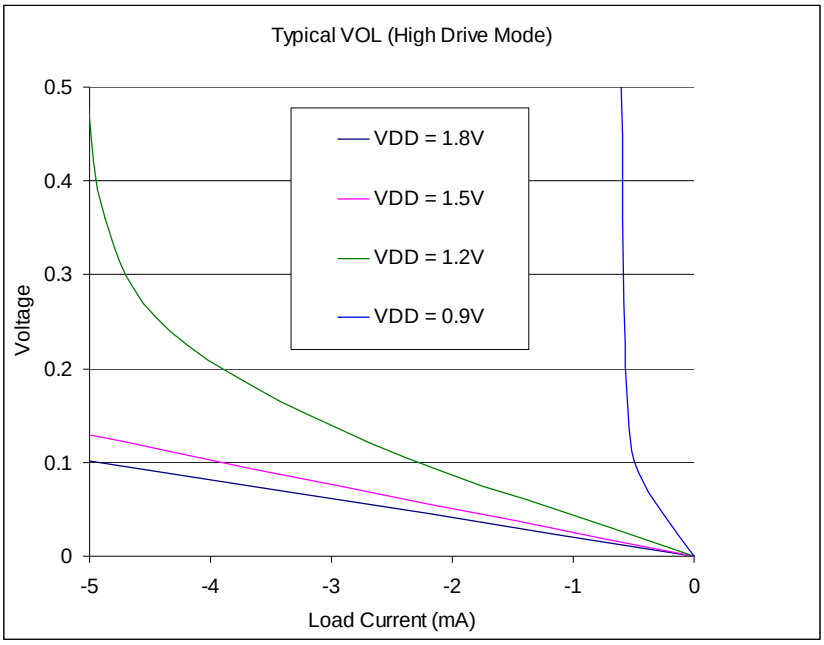

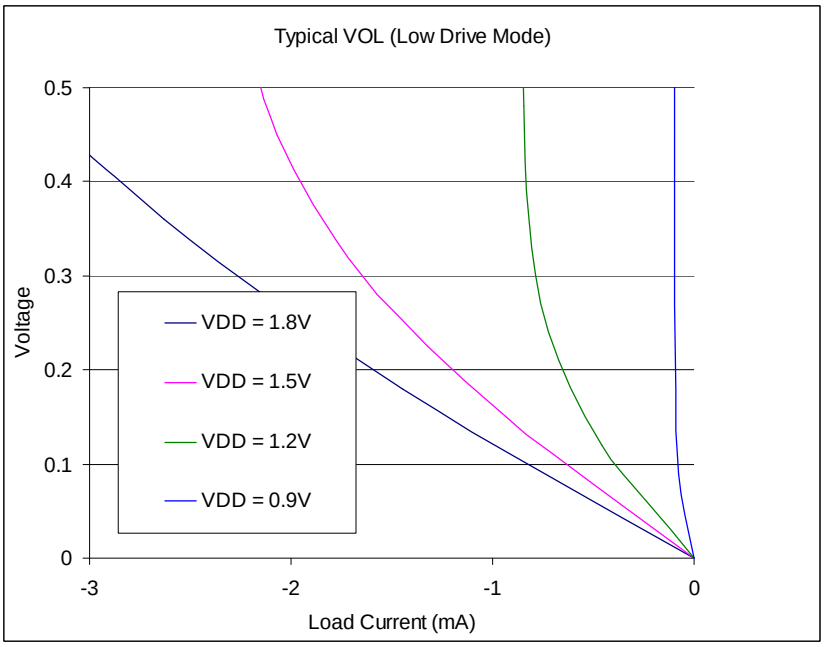

Figure 4.10. Typical VOL Curves, 0.9–1.8 V

Table 4.4. Reset Electrical Characteristics

V_{DD} = 1.8 to 3.6 V, –40 to +85 °C unless otherwise specified.

Parameter	Conditions	Min	Typ	Max	Units
$\overline{RST}$ Output Low Voltage	I_{OL} = 1.4 mA,	—	—	0.6	V
$\overline{RST}$ Input High Voltage	V_{DD} = 2.0 to 3.6 V V_{DD} = 0.9 to 2.0 V	V_{DD} – 0.6 0.7 x V_{DD}	— —	— —	V V
$\overline{RST}$ Input Low Voltage	V_{DD} = 2.0 to 3.6 V V_{DD} = 0.9 to 2.0 V	— —	— —	0.6 0.3 x V_{DD}	V V
$\overline{RST}$ Input Pullup Current	$\overline{RST}$ = 0.0 V, VDD = 1.8 V $\overline{RST}$ = 0.0 V, VDD = 3.6 V	— —	4 20	— 30	µA
VDD/DC+ Monitor Threshold (V_{RST})	Early Warning Reset Trigger (all power modes except Sleep)	1.8 1.7	1.85 1.75	1.9 1.8	V
VBAT Ramp Time for Power On	VBAT Ramp from 0–0.9 V	—	—	3	ms
VBAT Monitor Threshold (V_{POR})	Initial Power-On (VBAT Rising) **Early Warning** Brownout Condition (VBAT Falling) Recovery from Brownout (VBAT Rising)	— **TBD** 0.7 —	0.75 **1.0** 0.8 0.95	— **TBD** 0.9 —	V
Missing Clock Detector Timeout	Time from last system clock rising edge to reset initiation	100	650	1000	µs
Minimum System Clock w/ Missing Clock Detector Enabled	System clock frequency which triggers a missing clock detector timeout	—	7	10	kHz
Reset Time Delay	Delay between release of any reset source and code execution at location 0x0000	—	10	—	µs
Minimum $\overline{RST}$ Low Time to Generate a System Reset		15	—	—	µs
V_{DD} Monitor Turn-on Time		—	300	—	ns
V_{DD} Monitor Supply Current		—	7	—	µA

***Note:** **Blue** indicates a feature only available on ‘F912 and ‘F902 devices.

Table 4.5. Power Management Electrical Specifications

V_{DD} = 1.8 to 3.6 V, –40 to +85 °C unless otherwise specified.

Parameter	Conditions	Min	Typ	Max	Units
Idle Mode Wake-up Time		2	—	3	SYSCLKs
Suspend Mode Wake-up Time	Low power oscillator	—	400	—	ns
	Precision oscillator	—	1.3	—	µs
Sleep Mode Wake-up Time	Two-cell mode	—	2	—	µs
	One-cell mode	—	10	—	µs

Table 4.6. Flash Electrical Characteristics

V_{DD} = 1.8 to 3.6 V, –40 to +85 °C unless otherwise specified.

Parameter	Conditions	Min	Typ	Max	Units
Flash Size	C8051F912/1	16384*	—	—	bytes
	C8051F902/1	8192	—	—	bytes
Scratchpad Size		512	—	512	bytes
Endurance		1 k	TBD	—	Erase/Write Cycles
Erase Cycle Time		28	32	36	ms
Write Cycle Time		57	64	71	µs
***Note:** 1024 bytes at addresses 0x3C00 to 0x3FFF are reserved.					

Table 4.7. Internal Precision Oscillator Electrical Characteristics

V_{DD} = 1.8 to 3.6 V; T_A = –40 to +85 °C unless otherwise specified; Using factory-calibrated settings.

Parameter	Conditions	Min	Typ	Max	Units
Oscillator Frequency	–40 to +85 °C, V_{DD} = 1.8–3.6 V	24	24.5	25	MHz
Oscillator Supply Current (from V_{DD})	25 °C; includes bias current of 90–100 µA	—	300*	—	µA
***Note:** Does not include clock divider or clock tree supply current.					

Table 4.8. Internal Low-Power Oscillator Electrical Characteristics

V_{DD} = 1.8 to 3.6 V; T_A = –40 to +85 °C unless otherwise specified; Using factory-calibrated settings.

Parameter	Conditions	Min	Typ	Max	Units
Oscillator Frequency	–40 to +85 °C, V_{DD} = 1.8–3.6 V	18	20	22	MHz
Oscillator Supply Current (from V_{DD})	25 °C No separate bias current required.	—	100*	—	µA
***Note:** Does not include clock divider or clock tree supply current.					

Table 4.9. SmaRTClock Characteristics

V_{DD} = 1.8 to 3.6 V; T_A = –40 to +85 °C unless otherwise specified; Using factory-calibrated settings.

Parameter	Conditions	Min	Typ	Max	Units
Oscillator Frequency (LFO)		**13.1**	**16.4**	**19.7**	kHz
Note: **Blue** indicates a feature only available on ‘F912 and ‘F902 devices.					

Table 4.10. ADC0 Electrical Characteristics

V_{DD} = 1.8 to 3.6V V, VREF = 1.65 V (REFSL[1:0] = 11), –40 to +85 °C unless otherwise specified.

Parameter	Conditions	Min	Typ	Max	Units
DC Accuracy					
Resolution	**12-bit mode** 10-bit mode		**12** 10		bits
Integral Nonlinearity	**12-bit mode** 10-bit mode	— —	**TBD** ±0.5	**±1.5** ±1	LSB
Differential Nonlinearity (Guaranteed Monotonic)	**12-bit mode** 10-bit mode	— —	**TBD** ±0.5	**±1** ±1	LSB
Offset Error	**12-bit mode** 10-bit mode	— —	**TBD** ±<1	**TBD** ±2	LSB
Full Scale Error	**12-bit mode** 10-bit mode	— —	**TBD** ±1	**TBD** ±2.5	LSB
Dynamic performance (10 kHz sine-wave single-ended input, 1 dB below Full Scale, 300 ksps)					
Signal-to-Noise Plus Distortion	**12-bit mode** 10-bit mode	**TBD** 54	**TBD** 58	— —	dB
Signal-to-Distortion	**12-bit mode** 10-bit mode	— —	**TBD** 73	— —	dB
Spurious-Free Dynamic Range	**12-bit mode** 10-bit mode	— —	**TBD** 75	— —	dB
Conversion Rate					
SAR Conversion Clock		—	—	8.33	MHz
Conversion Time in SAR Clocks	**12-bit mode** 10-bit Mode 8-bit Mode	**TBD** 13 11	— — —	— — —	clocks
Track/Hold Acquisition Time		1.5	—	—	us
Throughput Rate	**12-bit mode** 10-bit mode	— —	— —	**75** 300	ksps

Notes:
1. **Blue** indicates a feature only available on ‘F912 and ‘F902 devices.
2. Performance in 8-bit mode is similar to 10-bit mode.

Table 4.10. ADC0 Electrical Characteristics (Continued)

V_{DD} = 1.8 to 3.6V V, VREF = 1.65 V (REFSL[1:0] = 11), –40 to +85 °C unless otherwise specified.

Parameter	Conditions	Min	Typ	Max	Units
Analog Inputs					
ADC Input Voltage Range	Single Ended (AIN+ – GND)	0	—	VREF	V
Absolute Pin Voltage with respect to GND	Single Ended	0	—	V_{DD}	V
Sampling Capacitance (C8051F912/11/02/01)	1x Gain 0.5x Gain	—	28 26	—	pF
Input Multiplexer Impedance		—	5	—	kΩ
Power Specifications					
Power Supply Current (V_{DD} supplied to ADC0)	Conversion Mode (300 ksps) Tracking Mode (0 ksps)	— —	800 680	— —	µA
Power Supply Rejection	Internal High Speed VREF External VREF	— —	67 74	— —	dB

Notes:
1. **Blue** indicates a feature only available on ‘F912 and ‘F902 devices.
2. Performance in 8-bit mode is similar to 10-bit mode.

Table 4.11. Temperature Sensor Electrical Characteristics

V_{DD} = 1.8 to 3.6V V, –40 to +85 °C unless otherwise specified.

Parameter	Conditions	Min	Typ	Max	Units
Linearity		—	±1	—	°C
Slope		—	3.40	—	mV/°C
Slope Error*		—	40	—	µV/°C
Offset	Temp = 25 °C	—	1025	—	mV
Offset Error*	Temp = 25 °C	—	18	—	mV
Temperature Sensor Turn-On Time		—	1.7	—	µs
Supply Current		—	35	—	µA

***Note:** Represents one standard deviation from the mean.

Table 4.12. Voltage Reference Electrical Characteristics

V_{DD} = 1.8 to 3.6 V, –40 to +85 °C unless otherwise specified.

Parameter	Conditions	Min	Typ	Max	Units
Internal High Speed Reference (REFSL[1:0] = 11)					
Output Voltage	–40 to +85 °C, V_{DD} = 1.8–3.6 V	1.60	1.65	1.70	V
VREF Turn-on Time		—	—	1.5	µs
Supply Current	Normal Power Mode **Low Power Mode**	— —	TBD **TBD**	— —	µA
Internal Precision Reference (REFSL[1:0] = 00, REFOE = 1)					
Output Voltage	–40 to +85 °C, V_{DD} = 1.8–3.6 V	1.645	1.680	1.715	V
VREF Short-Circuit Current		—	3.5	—	mA
Load Regulation	Load = 0 to 200 µA to AGND	—	400	—	µV/µA
VREF Turn-on Time 1	4.7 µF tantalum, 0.1 µF ceramic bypass, settling to 0.5 LSB	—	15	—	ms
VREF Turn-on Time 2	0.1 µF ceramic bypass, settling to 0.5 LSB	—	300	—	µs
VREF Turn-on Time 3	no bypass cap, settling to 0.5 LSB	—	25	—	µs
Supply Current		—	15	—	µA
External Reference (REFSL[1:0] = 00, REFOE = 0)					
Input Voltage Range		0	—	V_{DD}	V
Input Current	Sample Rate = 300 ksps; VREF = 3.0 V	—	5.25	—	µA
Note: **Blue** indicates a feature only available on ‘F912 and ‘F902 devices.					

Table 4.13. IREF0 Electrical Characteristics

V_{DD} = 1.8 to 3.6 V, –40 to +85 °C, unless otherwise specified.

Parameter	Conditions	Min	Typ	Max	Units
Static Performance					
Resolution			6		bits
Output Compliance Range	Low Power Mode, Source High Current Mode, Source Low Power Mode, Sink High Current Mode, Sink	0 0 0.3 0.8	— — — —	V_{DD} – 0.4 V_{DD} – 0.8 V_{DD} V_{DD}	V
Integral Nonlinearity		—	<±0.2	±1.0	LSB
Differential Nonlinearity		—	<±0.2	±1.0	LSB
Offset Error		—	<±0.1	±0.5	LSB
Full Scale Error	Low Power Mode, Source	—	—	±5	%
	High Current Mode, Source	—	—	±6	%
	Low Power Mode, Sink	—	—	±8	%
	High Current Mode, Sink	—	—	±8	%
Absolute Current Error	Low Power Mode Sourcing 20 µA	—	<±1	±3	%
Dynamic Performance					
Output Settling Time to 1/2 LSB		—	300	—	ns
Startup Time		—	1	—	µs
Power Consumption					
Net Power Supply Current (V_{DD} supplied to IREF0 minus any output source current)	Low Power Mode, Source				
	IREF0DAT = 000001	—	10	—	µA
	IREF0DAT = 111111	—	10	—	µA
	High Current Mode, Source				
	IREF0DAT = 000001	—	10	—	µA
	IREF0DAT = 111111	—	10	—	µA
	Low Power Mode, Sink				
	IREF0DAT = 000001	—	1	—	µA
	IREF0DAT = 111111	—	11	—	µA
	High Current Mode, Sink				
	IREF0DAT = 000001	—	12	—	µA
	IREF0DAT = 111111	—	81	—	µA

Note: Refer to “PWM Enhanced Mode” on page 91 for information on how to improve IREF0 resolution.

Table 4.14. Comparator Electrical Characteristics
V_{DD} = 1.8 to 3.6 V, –40 to +85 °C unless otherwise noted.

Parameter	Conditions	Min	Typ	Max	Units
Response Time: Mode 0, V_{DD} = 2.4 V, V_{CM}^* = 1.2 V	CP0+ – CP0– = 100 mV	—	130	—	ns
	CP0+ – CP0– = –100 mV	—	200	—	ns
Response Time: Mode 1, V_{DD} = 2.4 V, V_{CM}^* = 1.2 V	CP0+ – CP0– = 100 mV	—	210	—	ns
	CP0+ – CP0– = –100 mV	—	410	—	ns
Response Time: Mode 2, V_{DD} = 2.4 V, V_{CM}^* = 1.2 V	CP0+ – CP0– = 100 mV	—	420	—	ns
	CP0+ – CP0– = –100 mV	—	1200	—	ns
Response Time: Mode 3, V_{DD} = 2.4 V, V_{CM}^* = 1.2 V	CP0+ – CP0– = 100 mV	—	1750	—	ns
	CP0+ – CP0– = –100 mV	—	6200	—	ns
Common-Mode Rejection Ratio		—	1.5	4	mV/V
Inverting or Non-Inverting Input Voltage Range		–0.25	—	V_{DD} + 0.25	V
Input Capacitance		—	12	—	pF
Input Bias Current		—	1	—	nA
Input Offset Voltage		–7	—	+7	mV
Power Supply					
Power Supply Rejection		—	0.1	—	mV/V
Power-up Time	VDD = 3.6 V	—	0.6	—	µs
	VDD = 3.0 V	—	1.0	—	µs
	VDD = 2.4 V	—	1.8	—	µs
	VDD = 1.8 V	—	10	—	µs
Supply Current at DC	Mode 0	—	23	—	µA
	Mode 1	—	8.8	—	µA
	Mode 2	—	2.6	—	µA
	Mode 3	—	0.4	—	µA

***Note:** Vcm is the common-mode voltage on CP0+ and CP0–.

Table 4.14. Comparator Electrical Characteristics (Continued)
V_{DD} = 1.8 to 3.6 V, –40 to +85 °C unless otherwise noted.

Parameter	Conditions	Min	Typ	Max	Units
Hysteresis					
Mode 0					
Hysteresis 1	(CPnHYP/N1–0 = 00)	—	0	—	mV
Hysteresis 2	(CPnHYP/N1–0 = 01)	—	8.5	—	mV
Hysteresis 3	(CPnHYP/N1–0 = 10)	—	17	—	mV
Hysteresis 4	(CPnHYP/N1–0 = 11)	—	34	—	mV
Mode 1					
Hysteresis 1	(CPnHYP/N1–0 = 00)	—	0	—	mV
Hysteresis 2	(CPnHYP/N1–0 = 01)	—	6.5	—	mV
Hysteresis 3	(CPnHYP/N1–0 = 10)	—	13	—	mV
Hysteresis 4	(CPnHYP/N1–0 = 11)	—	26	—	mV
Mode 2					
Hysteresis 1	(CPnHYP/N1–0 = 00)	—	0	1	mV
Hysteresis 2	(CPnHYP/N1–0 = 01)	2	5	10	mV
Hysteresis 3	(CPnHYP/N1–0 = 10)	5	10	20	mV
Hysteresis 4	(CPnHYP/N1–0 = 11)	12	20	30	mV
Mode 3					
Hysteresis 1	(CPnHYP/N1–0 = 00)	—	0	—	mV
Hysteresis 2	(CPnHYP/N1–0 = 01)	—	4.5	—	mV
Hysteresis 3	(CPnHYP/N1–0 = 10)	—	9	—	mV
Hysteresis 4	(CPnHYP/N1–0 = 11)	—	17	—	mV
***Note:** Vcm is the common-mode voltage on CP0+ and CP0–.					

Table 4.15. VREG0 Electrical Characteristics
V_{DD} = 1.8 to 3.6 V, –40 to +85 °C unless otherwise specified.

Parameter	Conditions	Min	Typ	Max	Units
Input Voltage Range		1.8	—	3.6	V
Bias Current	Normal, idle, suspend, or stop mode	—	20	—	µA

Table 4.16. DC-DC Converter (DC0) Electrical Characteristics
VBAT = 0.9 to 1.8 V, –40 to +85 °C unless otherwise specified.

Parameter	Conditions	Min	Typ	Max	Units
Input Voltage Range	C8051F912/02 C8051F911/01	0.9 0.9	— —	3.6 1.8	V
Input Inductor Value		500	680	900	nH
Input Inductor Current Rating		250	—	—	mA
Inductor DC Resistance		—	—	0.5	Ω
Input Capacitor Value	Source Impedance < 2 Ω	— —	4.7 1.0	— —	µF
Output Voltage Range	Target Output = 1.8 V Target Output = 1.9 V Target Output = 2.0 V Target Output = 2.1 V Target Output = 2.4 V Target Output = 2.7 V Target Output = 3.0 V Target Output = 3.3 V	1.73 1.83 1.93 2.03 2.30 2.60 2.90 3.18	1.80 1.90 2.00 2.10 2.40 2.70 3.00 3.30	1.87 1.97 2.07 2.17 2.50 2.80 3.10 3.42	V
Output Load Regulation	Target Output = 2.0 V, 1 to 30 mA Target Output = 3.0 V, 1 to 20 mA	— —	±0.3 ±1	— —	%
Output Current (based on output power spec)	Target Output = 1.8 V Target Output = 1.9 V Target Output = 2.0 V Target Output = 2.1 V Target Output = 2.4 V Target Output = 2.7 V Target Output = 3.0 V Target Output = 3.3 V	— — — — — — — —	— — — — — — — —	36 34 32 30 27 24 21 19	mA
Output Power		—	—	65	mW
Bias Current (Normal Current Mode)	from VBAT supply from VDD/DC+ supply	— —	80 100	— —	µA
Bias Current (Low Power Mode)	from VBAT supply from VDD/DC+ supply	— —	TBD TBD	— —	
Clocking Frequency		1.6	2.4	3.2	MHz
Maximum DC Load Current During Startup		—	—	1	mA
Capacitance Connected to Output		0.8	1.0	2.0	µF

5. SAR ADC with 16-bit Auto-Averaging Accumulator and Autonomous Low Power Burst Mode

The ADC0 on C8051F91x-C8051F90x devices is a 300 ksps, 10-bit or 75 ksps, 12-bit ('F912/02 only) successive-approximation-register (SAR) ADC with integrated track-and-hold and programmable window detector. ADC0 also has an autonomous low power Burst Mode which can automatically enable ADC0, capture and accumulate samples, then place ADC0 in a low power shutdown mode without CPU intervention. It also has a 16-bit accumulator that can automatically oversample and average the ADC results. See Section 5.4 for more details on using the ADC in 12-bit mode.

The ADC is fully configurable under software control via Special Function Registers. The ADC0 operates in Single-ended mode and may be configured to measure various different signals using the analog multiplexer described in "5.7. ADC0 Analog Multiplexer" on page 82. The voltage reference for the ADC is selected as described in "5.9. Voltage and Ground Reference Options" on page 87.

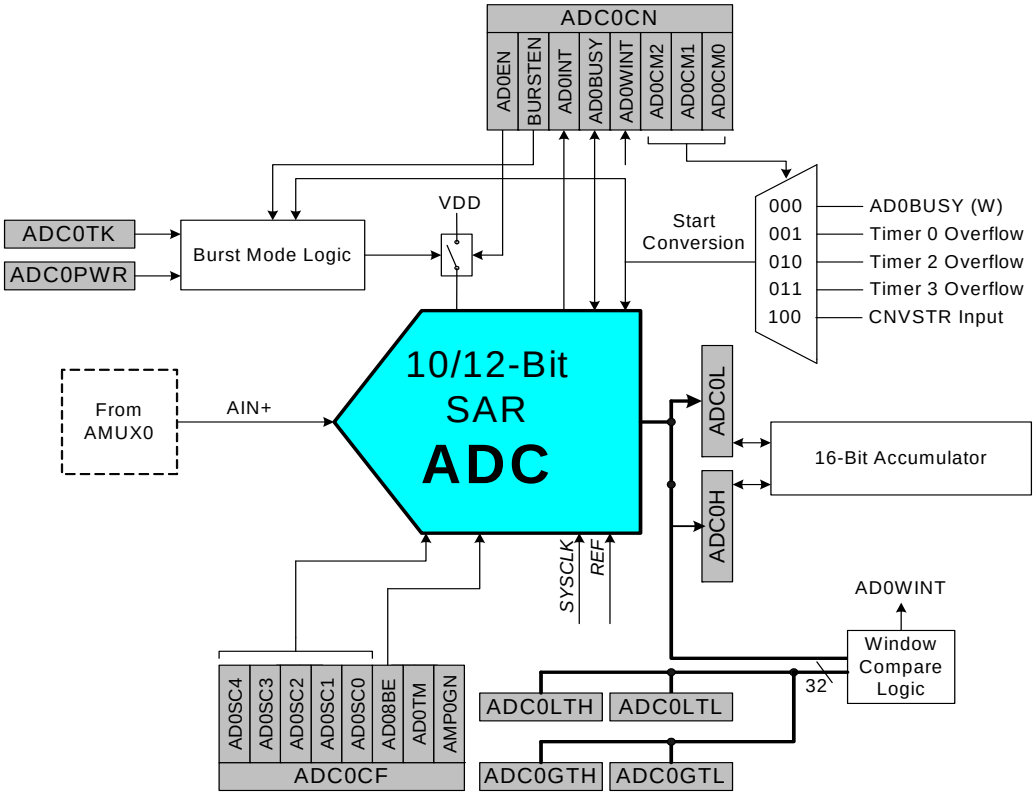

Figure 5.1. ADC0 Functional Block Diagram

5.1. Output Code Formatting

The registers ADC0H and ADC0L contain the high and low bytes of the output conversion code from the ADC at the completion of each conversion. Data can be right-justified or left-justified, depending on the setting of the AD0SJST[2:0]. When the repeat count is set to 1, conversion codes are represented as 10-bit unsigned integers. Inputs are measured from 0 to VREF x 1023/1024. Example codes are shown below for both right-justified and left-justified data. Unused bits in the ADC0H and ADC0L registers are set to 0.

Input Voltage	Right-Justified ADC0H:ADC0L (AD0SJST = 000)	Left-Justified ADC0H:ADC0L (AD0SJST = 100)
VREF x 1023/1024	0x03FF	0xFFC0
VREF x 512/1024	0x0200	0x8000
VREF x 256/1024	0x0100	0x4000
0	0x0000	0x0000

When the repeat count is greater than 1, the output conversion code represents the accumulated result of the conversions performed and is updated after the last conversion in the series is finished. Sets of 4, 8, 16, 32, or 64 consecutive samples can be accumulated and represented in unsigned integer format. The repeat count can be selected using the AD0RPT bits in the ADC0AC register. When a repeat count higher than 1, the ADC output must be right-justified (AD0SJST = 0xx); unused bits in the ADC0H and ADC0L registers are set to 0. The example below shows the right-justified result for various input voltages and repeat counts. Notice that accumulating 2^n samples is equivalent to left-shifting by *n* bit positions when all samples returned from the ADC have the same value.

Input Voltage	Repeat Count = 4	Repeat Count = 16	Repeat Count = 64
V_{REF} x 1023/1024	0x0FFC	0x3FF0	0xFFC0
V_{REF} x 512/1024	0x0800	0x2000	0x8000
V_{REF} x 511/1024	0x07FC	0x1FF0	0x7FC0
0	0x0000	0x0000	0x0000

The AD0SJST bits can be used to format the contents of the 16-bit accumulator. The accumulated result can be shifted right by 1, 2, or 3 bit positions. Based on the principles of oversampling and averaging, the effective ADC resolution increases by 1 bit each time the oversampling rate is increased by a factor of 4. The example below shows how to increase the effective ADC resolution by 1, 2, and 3 bits to obtain an effective ADC resolution of 11-bit, 12-bit, or 13-bit respectively without CPU intervention.

Input Voltage	Repeat Count = 4 Shift Right = 1 11-Bit Result	Repeat Count = 16 Shift Right = 2 12-Bit Result	Repeat Count = 64 Shift Right = 3 13-Bit Result
V_{REF} x 1023/1024	0x07F7	0x0FFC	0x1FF8
V_{REF} x 512/1024	0x0400	0x0800	0x1000
V_{REF} x 511/1024	0x03FE	0x04FC	0x0FF8
0	0x0000	0x0000	0x0000

5.2. Modes of Operation

ADC0 has a maximum conversion speed of 300 ksps in 10-bit mode. The ADC0 conversion clock (SARCLK) is a divided version of the system clock when Burst Mode is disabled (BURSTEN = 0), or a divided version of the low power oscillator when Burst Mode is enabled (BURSEN = 1). The clock divide value is determined by the AD0SC bits in the ADC0CF register.

5.2.1. Starting a Conversion

A conversion can be initiated in one of five ways, depending on the programmed states of the ADC0 Start of Conversion Mode bits (AD0CM2–0) in register ADC0CN. Conversions may be initiated by one of the following:

1. Writing a 1 to the AD0BUSY bit of register ADC0CN
2. A Timer 0 overflow (i.e., timed continuous conversions)
3. A Timer 2 overflow
4. A Timer 3 overflow
5. A rising edge on the CNVSTR input signal (pin P0.6)

Writing a 1 to AD0BUSY provides software control of ADC0 whereby conversions are performed "on-demand". During conversion, the AD0BUSY bit is set to logic 1 and reset to logic 0 when the conversion is complete. The falling edge of AD0BUSY triggers an interrupt (when enabled) and sets the ADC0 interrupt flag (AD0INT). When polling for ADC conversion completions, the ADC0 interrupt flag (AD0INT) should be used. Converted data is available in the ADC0 data registers, ADC0H:ADC0L, when bit AD0INT is logic 1. When Timer 2 or Timer 3 overflows are used as the conversion source, Low Byte overflows are used if Timer 2/3 is in 8-bit mode; High byte overflows are used if Timer 2/3 is in 16-bit mode. See “25. Timers” on page 279 for timer configuration.

Important Note About Using CNVSTR: The CNVSTR input pin also functions as Port pin P0.6. When the CNVSTR input is used as the ADC0 conversion source, Port pin P0.6 should be skipped by the Digital Crossbar. To configure the Crossbar to skip P0.6, set to 1 Bit 6 in register P0SKIP. See “21. Port Input/Output” on page 214 for details on Port I/O configuration.

Important Note: When operating the device in one-cell mode, there is an option available to automatically synchronize the start of conversion with the quietest portion of the dc-dc converter switching cycle. Activating this option may help to reduce interference from internal or external power supply noise generated by the dc-dc converter. Asserting this bit will hold off the start of an ADC conversion initiated by any of the methods described above until the ADC receives a synchronizing signal from the dc-dc converter. The delay in initiation of the conversion can be as much as one cycle of the dc-dc converter clock, which is 625 ns at the minimum dc-dc clock frequency of 1.6 MHz. The synchronization feature also causes the dc-dc converter clock to be used as the ADC0 conversion clock. The maximum conversion rate will be limited to approximately 170 ksps at the maximum dc-dc converter clock rate of 3.2 MHz. In this mode, the ADC0 SAR Conversion Clock Divider must be set to 1 by setting AD0SC[4:0] = 00000b in SFR register ADC0CF. To provide additional flexibility in minimizing noise, the ADC0 conversion clock provided by the dc-dc converter can be inverted by setting the AD0CKINV bit in the DC0CF register. For additional information on the synchronization feature, see the description of the SYNC bit in “SFR Definition 16.1. DC0CN: DC-DC Converter Control” on page 173 and the description of the AD0CKINV bit in “SFR Definition 16.2. DC0CF: DC-DC Converter Configuration” on page 174. This bit must be set to 0 in two-cell mode for the ADC to operate.

5.2.2. Tracking Modes

Each ADC0 conversion must be preceded by a minimum tracking time in order for the converted result to be accurate. The minimum tracking time is given in Table 4.10. The AD0TM bit in register ADC0CN controls the ADC0 track-and-hold mode. In its default state when Burst Mode is disabled, the ADC0 input is continuously tracked, except when a conversion is in progress. When the AD0TM bit is logic 1, ADC0 operates in low-power track-and-hold mode. In this mode, each conversion is preceded by a tracking period of 3 SAR clocks (after the start-of-conversion signal). When the CNVSTR signal is used to initiate conversions in low-power tracking mode, ADC0 tracks only when CNVSTR is low; conversion begins on the rising edge of CNVSTR (see Figure 5.2). Tracking can also be disabled (shutdown) when the device is in low power standby or sleep modes. Low-power track-and-hold mode is also useful when AMUX settings are frequently changed, due to the settling time requirements described in “5.2.4. Settling Time Requirements” on page 71.

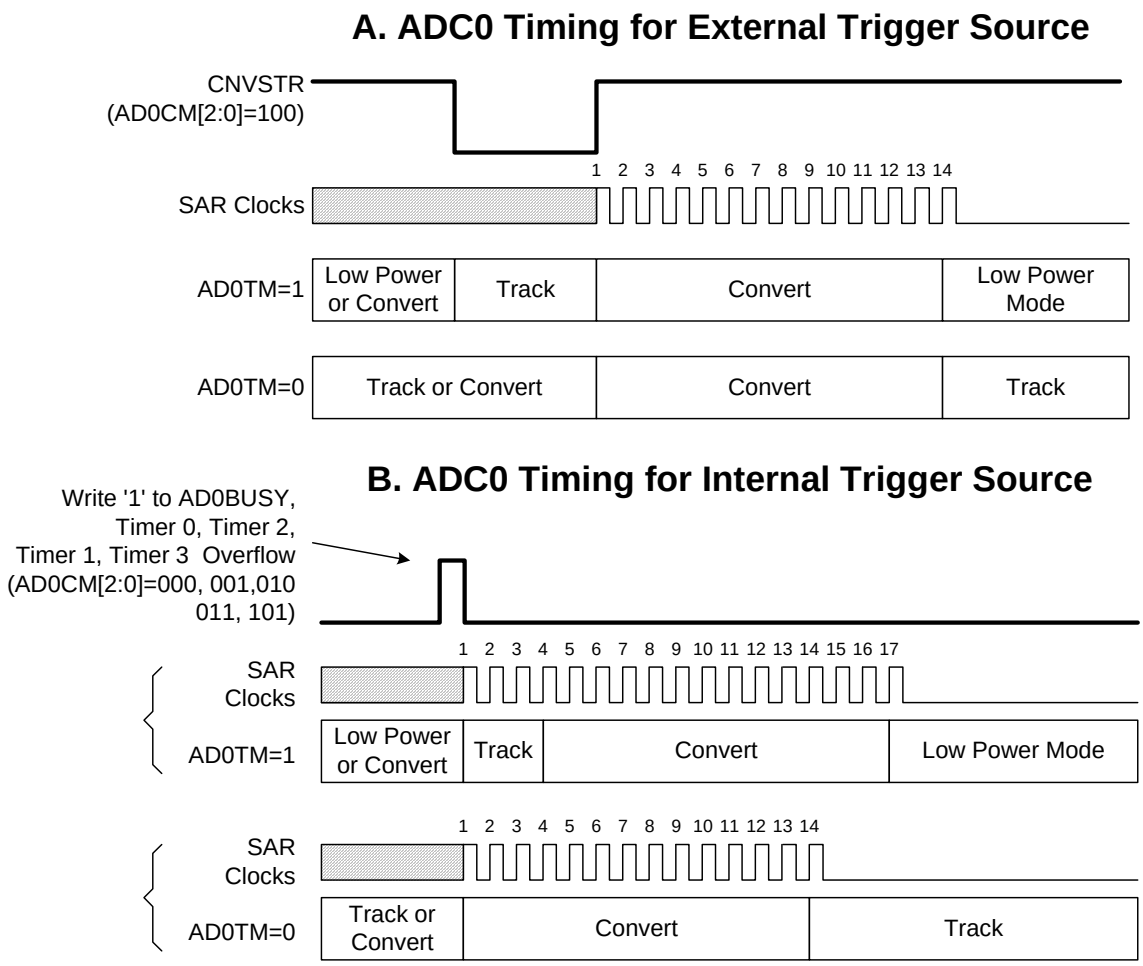

Figure 5.2. 10-Bit ADC Track and Conversion Example Timing (BURSTEN = 0)

5.2.3. Burst Mode

Burst Mode is a power saving feature that allows ADC0 to remain in a low power state between conversions. When Burst Mode is enabled, ADC0 wakes from a low power state, accumulates 1, 4, 8, 16, 32, or 64 using an internal Burst Mode clock (approximately 25 MHz), then re-enters a low power state. Since the Burst Mode clock is independent of the system clock, ADC0 can perform multiple conversions then enter a low power state within a single system clock cycle, even if the system clock is slow (e.g. 32.768 kHz), or suspended.

Burst Mode is enabled by setting BURSTEN to logic 1. When in Burst Mode, AD0EN controls the ADC0 idle power state (i.e. the state ADC0 enters when not tracking or performing conversions). If AD0EN is set to logic 0, ADC0 is powered down after each burst. If AD0EN is set to logic 1, ADC0 remains enabled after each burst. On each convert start signal, ADC0 is awakened from its Idle Power State. If ADC0 is powered down, it will automatically power up and wait the programmable Power-Up Time controlled by the AD0PWR bits. Otherwise, ADC0 will start tracking and converting immediately. Figure 5.3 shows an example of Burst Mode Operation with a slow system clock and a repeat count of 4.

When Burst Mode is enabled, a single convert start will initiate a number of conversions equal to the repeat count. When Burst Mode is disabled, a convert start is required to initiate each conversion. In both modes, the ADC0 End of Conversion Interrupt Flag (AD0INT) will be set after “repeat count” conversions have been accumulated. Similarly, the Window Comparator will not compare the result to the greater-than and less-than registers until “repeat count” conversions have been accumulated.

In Burst Mode, tracking is determined by the settings in AD0PWR and AD0TK. The default settings for these registers will work in most applications without modification; however, settling time requirements may need adjustment in some applications. Refer to “5.2.4. Settling Time Requirements” on page 71 for more details.

Notes:

- Setting AD0TM to 1 will insert an additional 3 SAR clocks of tracking before each conversion, regardless of the settings of AD0PWR and AD0TK.
- When using Burst Mode, care must be taken to issue a convert start signal no faster than once every four SYSCLK periods. This includes external convert start signals.

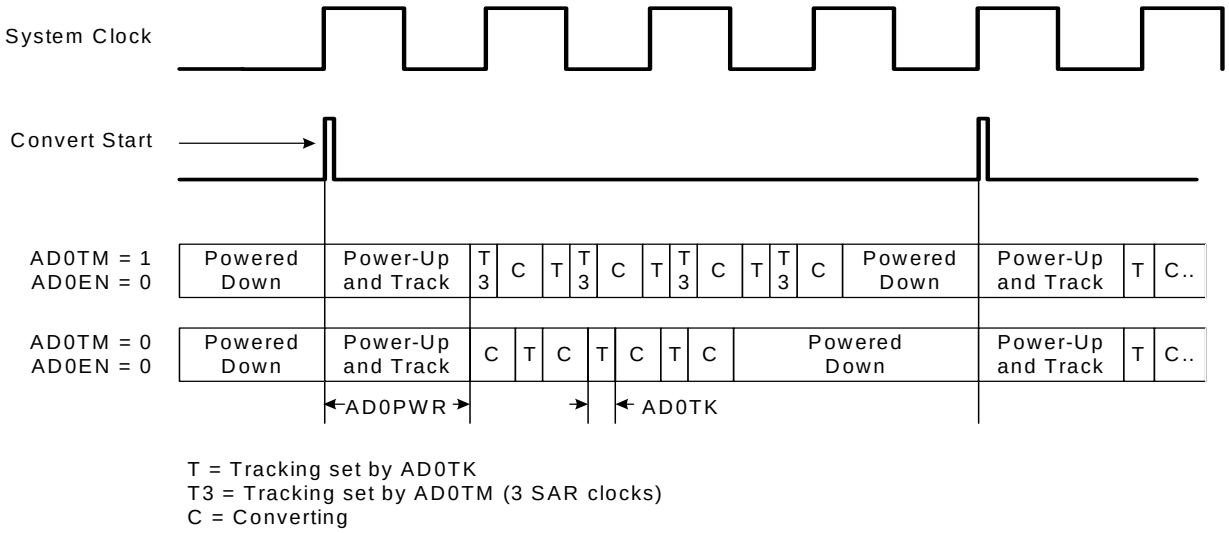

Figure 5.3. Burst Mode Tracking Example with Repeat Count Set to 4

5.2.4. Settling Time Requirements

A minimum amount of tracking time is required before each conversion can be performed, to allow the sampling capacitor voltage to settle. This tracking time is determined by the AMUX0 resistance, the ADC0 sampling capacitance, any external source resistance, and the accuracy required for the conversion. Note that in low-power tracking mode, three SAR clocks are used for tracking at the start of every conversion. For many applications, these three SAR clocks will meet the minimum tracking time requirements, and higher values for the external source impedance will increase the required tracking time.

Figure 5.4 shows the equivalent ADC0 input circuit. The required ADC0 settling time for a given settling accuracy (SA) may be approximated by Equation 5.1. When measuring the Temperature Sensor output or V_{DD} with respect to GND, R_{TOTAL} reduces to R_{MUX}. See Table 4.10 for ADC0 minimum settling time requirements as well as the mux impedance and sampling capacitor values.

$$t = \ln\left(\frac{2^n}{SA}\right) \times R_{TOTAL} C_{SAMPLE}$$

Equation 5.1. ADC0 Settling Time Requirements

Where:
SA is the settling accuracy, given as a fraction of an LSB (for example, 0.25 to settle within 1/4 LSB)
t is the required settling time in seconds
R_{TOTAL} is the sum of the AMUX0 resistance and any external source resistance.
n is the ADC resolution in bits (10).

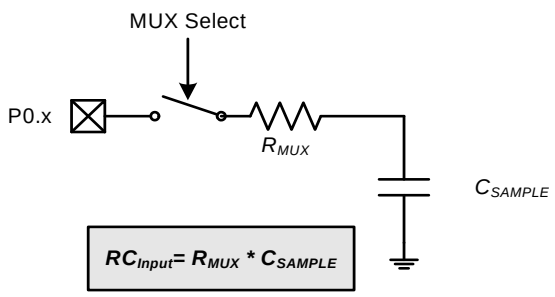

Note: The value of CSAMPLE depends on the PGA Gain. See Table 4.10 for details.

Figure 5.4. ADC0 Equivalent Input Circuits

5.2.5. Gain Setting

The ADC has gain settings of 1x and 0.5x. In 1x mode, the full scale reading of the ADC is determined directly by V_{REF}. In 0.5x mode, the full-scale reading of the ADC occurs when the input voltage is V_{REF} x 2. The 0.5x gain setting can be useful to obtain a higher input Voltage range when using a small V_{REF} voltage, or to measure input voltages that are between V_{REF} and V_{DD}. Gain settings for the ADC are controlled by the AMP0GN bit in register ADC0CF.

5.3. 8-Bit Mode

Setting the ADC08BE bit in register ADC0CF to 1 will put the ADC in 8-bit mode.In 8-bit mode, only the 8 MSBs of data are converted, allowing the conversion to be completed in two fewer SAR clock cycles than a 10-bit conversion. This can result in an overall lower power consumption since the system can spend more time in a low power mode. The two LSBs of a conversion are always 00 in this mode, and the ADC0L register will always read back 0x00.

5.4. 12-Bit Mode (C8051F912/02 Only)

C8051F912/02 devices have an enhanced SAR converter that provides 12-bit resolution while retaining the 10- and 8-bit operating modes of the other devices in the family. When configured for 12-bit conversions, the ADC performs four 10-bit conversions using four different reference voltages and combines the results into a single 12-bit value. Unlike simple averaging techniques, this method provides true 12-bit resolution of AC or DC input signals without depending on noise to provide dithering. The converter also employs a hardware Dynamic Element Matching algorithm that reconfigures the largest elements of the internal DAC for each of the four 10-bit conversions to cancel the any matching errors, enabling the converter to achieve 12-bit linearity performance to go along with its 12-bit resolution.

The 12-bit mode is enabled by setting the AD012BE bit (ADC0AC.7) to logic 1 and configuring Burst Mode for four conversions as described in Section 5.2.3. The conversion can be initiated using any of the methods described in Section 5.2.1, and the 12-bit result will appear in the ADC0H and ADC0L registers. Since the 12-bit result is formed from a combination of four 10-bit results, the maximum output value is 4 x (1023) = 4092, rather than the max value of (2^12 – 1) = 4095 that is produced by a traditional 12-bit converter.

5.5. Low Power Mode (C8051F912/902 only)

The C8051F912/02 SAR converter provides a low power mode that allows a significant reduction in operating current when operating at low SAR clock frequencies. Low power mode is enabled by setting the AD0LPM bit (ADC0PWR.7) to 1. In general, low power mode is recommended when operating with SAR conversion clock frequency at 4 MHz or less. See the Electrical Characteristics chapter for details on power consumption and the maximum clock frequencies allowed in each mode. Setting the Low Power Mode bit reduces the bias currents in both the SAR converter and in the High-Speed Voltage Reference.

SFR Definition 5.1. ADC0CN: ADC0 Control

Bit	7	6	5	4	3	2	1	0
Name	AD0EN	BURSTEN	AD0INT	AD0BUSY	AD0WINT	ADC0CM		
Type	R/W	R/W	R/W	W	R/W	R/W		
Reset	0	0	0	0	0	0	0	0

SFR Page = 0x0; SFR Address = 0xE8; bit-addressable;

Bit	Name	Function
7	AD0EN	**ADC0 Enable.** 0: ADC0 Disabled (low-power shutdown). 1: ADC0 Enabled (active and ready for data conversions).
6	BURSTEN	**ADC0 Burst Mode Enable.** 0: ADC0 Burst Mode Disabled. 1: ADC0 Burst Mode Enabled.
5	AD0INT	**ADC0 Conversion Complete Interrupt Flag.** Set by hardware upon completion of a data conversion (BURSTEN=0), or a burst of conversions (BURSTEN=1). Can trigger an interrupt. Must be cleared by software.
4	AD0BUSY	**ADC0 Busy.** Writing 1 to this bit initiates an ADC conversion when ADC0CM[2:0] = 000.
3	AD0WINT	**ADC0 Window Compare Interrupt Flag.** Set by hardware when the contents of ADC0H:ADC0L fall within the window specified by ADC0GTH:ADC0GTL and ADC0LTH:ADC0LTL. Can trigger an interrupt. Must be cleared by software.
2:0	ADC0CM[2:0]	**ADC0 Start of Conversion Mode Select.** Specifies the ADC0 start of conversion source. 000: ADC0 conversion initiated on write of 1 to AD0BUSY. 001: ADC0 conversion initiated on overflow of Timer 0. 010: ADC0 conversion initiated on overflow of Timer 2. 011: ADC0 conversion initiated on overflow of Timer 3. 1xx: ADC0 conversion initiated on rising edge of CNVSTR.

SFR Definition 5.2. ADC0CF: ADC0 Configuration

Bit	7	6	5	4	3	2	1	0
Name	AD0SC[4:0]					AD08BE	AD0TM	AMP0GN
Type	R/W					R/W	R/W	R/W
Reset	1	1	1	1	1	0	0	0

SFR Page = 0x0; SFR Address = 0xBC

Bit	Name	Function
7:3	AD0SC[4:0]	**ADC0 SAR Conversion Clock Divider.** SAR Conversion clock is derived from FCLK by the following equation, where *AD0SC* refers to the 5-bit value held in bits AD0SC[4:0]. SAR Conversion clock requirements are given in Table 4.10. BURSTEN = 0: FCLK is the current system clock. BURSTEN = 1: FCLK is the 20 MHz low power oscillator, independent of the system clock. $AD0SC = \frac{FCLK}{CLK_{SAR}} - 1$ * *Round the result up. or $CLK_{SAR} = \frac{FCLK}{AD0SC + 1}$
2	AD08BE	**ADC0 8-Bit Mode Enable.** 0: ADC0 operates in 10-bit mode (normal operation). 1: ADC0 operates in 8-bit mode.
1	AD0TM	**ADC0 Track Mode.** Selects between Normal or Delayed Tracking Modes. 0: Normal Track Mode: When ADC0 is enabled, conversion begins immediately following the start-of-conversion signal. 1: Delayed Track Mode: When ADC0 is enabled, conversion begins 3 SAR clock cycles following the start-of-conversion signal. The ADC is allowed to track during this time.
0	AMP0GN	**ADC0 Gain Control.** 0: The on-chip PGA gain is 0.5. 1: The on-chip PGA gain is 1.

SFR Definition 5.3. ADC0AC: ADC0 Accumulator Configuration

Bit	7	6	5	4	3	2	1	0
Name	AD012BE	AD0AE	AD0SJST			AD0RPT		
Type	R/W	W	R/W			R/W		
Reset	0	0	0	0	0	0	0	0

SFR Page = 0x0; SFR Address = 0xBA

Bit	Name	Function
7	AD012BE	**ADC0 12-Bit Mode Enable.** Enables 12-bit Mode. Only available on ‘F912 and ‘F902 devices. 0: 12-bit Mode Disabled. 1: 12-bit Mode Enabled.
6	AD0AE	**ADC0 Accumulate Enable.** Enables multiple conversions to be accumulated when burst mode is disabled. 0: ADC0H:ADC0L contain the result of the latest conversion when Burst Mode is disabled. 1: ADC0H:ADC0L contain the accumulated conversion results when Burst Mode is disabled. Software must write 0x0000 to ADC0H:ADC0L to clear the accumulated result. This bit is write-only. Always reads 0b.
5:3	AD0SJST[2:0]	**ADC0 Accumulator Shift and Justify.** Specifies the format of data read from ADC0H:ADC0L. 000: Right justified. No shifting applied. 001: Right justified. Shifted right by 1 bit. 010: Right justified. Shifted right by 2 bits. 011: Right justified. Shifted right by 3 bits. 100: Left justified. No shifting applied. All remaining bit combinations are reserved.
2:0	AD0RPT[2:0]	**ADC0 Repeat Count.** Selects the number of conversions to perform and accumulate in Burst Mode. This bit field must be set to 000 if Burst Mode is disabled. 000: Perform and Accumulate 1 conversion. 001: Perform and Accumulate 4 conversions. 010: Perform and Accumulate 8 conversions. 011: Perform and Accumulate 16 conversions. 100: Perform and Accumulate 32 conversions. 101: Perform and Accumulate 64 conversions. All remaining bit combinations are reserved.

SFR Definition 5.4. ADC0PWR: ADC0 Burst Mode Power-Up Time

Bit	7	6	5	4	3	2	1	0
Name	AD0LPM				AD0PWR[3:0]			
Type	R/W	R	R	R	R/W			
Reset	0	0	0	0	1	1	1	1

SFR Page = 0xF; SFR Address = 0xBA

Bit	Name	Function
7	AD0LPM	**ADC0 Low Power Mode Enable.** Enables Low Power Mode Operation. Only available on ‘F912 and ‘F902 devices. 0: Low Power Mode disabled. 1: Low Power Mode enabled.
6:4	Unused	**Unused.** Read = 0000b; Write = Don’t Care.
3:0	AD0PWR[3:0]	**ADC0 Burst Mode Power-Up Time.** Sets the time delay required for ADC0 to power up from a low power state. For BURSTEN = 0: ADC0 power state controlled by AD0EN. For BURSTEN = 1 and AD0EN = 1: ADC0 remains enabled and does not enter a low power state after all conversions are complete. Conversions can begin immediately following the start-of-conversion signal. For BURSTEN = 1 and AD0EN = 0: ADC0 enters a low power state (as specified in Table 5.1) after all conversions are complete. Conversions can begin a programmed delay after the start-of-conversion signal. The ADC0 Burst Mode Power-Up time is programmed according to the following equation: $AD0PWR = \frac{Tstartup}{400ns} - 1$ or $Tstartup = (AD0PWR + 1)400ns$ Note: Setting AD0PWR to 0x04 provides a typical tracking time of 2 us for the first sample taken after the start of conversion.

SFR Definition 5.5. ADC0TK: ADC0 Burst Mode Track Time

Bit	7	6	5	4	3	2	1	0
Name	Reserved		AD0TK[5:0]					
Type	R	R	R/W					
Reset	0	0	0	1	1	1	1	0

SFR Page = 0xF; SFR Address = 0xBD

Bit	Name	Function
7:6	Reserved	**Reserved.** Read = 0b; Write = Must Write 0b.
6	Unused	**Unused.** Read = 0b; Write = Don't Care.
5:0	AD0TK[5:0]	**ADC0 Burst Mode Track Time.** Sets the time delay between consecutive conversions performed in Burst Mode. The ADC0 Burst Mode Track time is programmed according to the following equation: $AD0TK = 63 - \left(\frac{Ttrack}{50ns} - 1\right)$ or $Ttrack = (64 - AD0TK)50ns$

Notes:
1. If AD0TM is set to 1, an additional 3 SAR clock cycles of Track time will be inserted prior to starting the conversion.
2. The Burst Mode Track delay is not inserted prior to the first conversion. The required tracking time for the first conversion should be met by the Burst Mode Power-Up Time.

SFR Definition 5.6. ADC0H: ADC0 Data Word High Byte

Bit	7	6	5	4	3	2	1	0
Name	ADC0[15:8]							
Type	R/W							
Reset	0	0	0	0	0	0	0	0

SFR Page = 0x0; SFR Address = 0xBE

Bit	Name	Description	Read	Write
7:0	ADC0[15:8]	**ADC0 Data Word High Byte.**	Most Significant Byte of the 16-bit ADC0 Accumulator formatted according to the settings in AD0SJST[2:0].	Set the most significant byte of the 16-bit ADC0 Accumulator to the value written.
Note: If Accumulator shifting is enabled, the most significant bits of the value read will be zeros. This register should not be written when the SYNC bit is set to 1.				

SFR Definition 5.7. ADC0L: ADC0 Data Word Low Byte

Bit	7	6	5	4	3	2	1	0
Name	ADC0[7:0]							
Type	R/W							
Reset	0	0	0	0	0	0	0	0

SFR Page = 0x0; SFR Address = 0xBD;

Bit	Name	Description	Read	Write
7:0	ADC0[7:0]	**ADC0 Data Word Low Byte.**	Least Significant Byte of the 16-bit ADC0 Accumulator formatted according to the settings in AD0SJST[2:0].	Set the least significant byte of the 16-bit ADC0 Accumulator to the value written.
Note: If Accumulator shifting is enabled, the most significant bits of the value read will be the least significant bits of the accumulator high byte. This register should not be written when the SYNC bit is set to 1.				

5.6. Programmable Window Detector

The ADC Programmable Window Detector continuously compares the ADC0 output registers to user-programmed limits, and notifies the system when a desired condition is detected. This is especially effective in an interrupt-driven system, saving code space and CPU bandwidth while delivering faster system response times. The window detector interrupt flag (AD0WINT in register ADC0CN) can also be used in polled mode. The ADC0 Greater-Than (ADC0GTH, ADC0GTL) and Less-Than (ADC0LTH, ADC0LTL) registers hold the comparison values. The window detector flag can be programmed to indicate when measured data is inside or outside of the user-programmed limits, depending on the contents of the ADC0 Less-Than and ADC0 Greater-Than registers.

SFR Definition 5.8. ADC0GTH: ADC0 Greater-Than High Byte

Bit	7	6	5	4	3	2	1	0
Name	AD0GT[15:8]							
Type	R/W							
Reset	1	1	1	1	1	1	1	1

SFR Page = 0x0; SFR Address = 0xC4

Bit	Name	Function
7:0	AD0GT[15:8]	**ADC0 Greater-Than High Byte.** Most Significant Byte of the 16-bit Greater-Than window compare register.

SFR Definition 5.9. ADC0GTL: ADC0 Greater-Than Low Byte

Bit	7	6	5	4	3	2	1	0
Name	AD0GT[7:0]							
Type	R/W							
Reset	1	1	1	1	1	1	1	1

SFR Page = 0x0; SFR Address = 0xC3

Bit	Name	Function
7:0	AD0GT[7:0]	**ADC0 Greater-Than Low Byte.** Least Significant Byte of the 16-bit Greater-Than window compare register.
Note: In 8-bit mode, this register should be set to 0x00.		

SFR Definition 5.10. ADC0LTH: ADC0 Less-Than High Byte

Bit	7	6	5	4	3	2	1	0
Name	AD0LT[15:8]							
Type	R/W							
Reset	0	0	0	0	0	0	0	0

SFR Page = 0x0; SFR Address = 0xC6

Bit	Name	Function
7:0	AD0LT[15:8]	**ADC0 Less-Than High Byte.** Most Significant Byte of the 16-bit Less-Than window compare register.

SFR Definition 5.11. ADC0LTL: ADC0 Less-Than Low Byte

Bit	7	6	5	4	3	2	1	0
Name	AD0LT[7:0]							
Type	R/W							
Reset	0	0	0	0	0	0	0	0

SFR Page = 0x0; SFR Address = 0xC5

Bit	Name	Function
7:0	AD0LT[7:0]	**ADC0 Less-Than Low Byte.** Least Significant Byte of the 16-bit Less-Than window compare register.
Note: In 8-bit mode, this register should be set to 0x00.		

5.6.1. Window Detector In Single-Ended Mode

Figure 5.5 shows two example window comparisons for right-justified data, with ADC0LTH:ADC0LTL = 0x0080 (128d) and ADC0GTH:ADC0GTL = 0x0040 (64d). The input voltage can range from 0 to VREF x (1023/1024) with respect to GND, and is represented by a 10-bit unsigned integer value. In the left example, an AD0WINT interrupt will be generated if the ADC0 conversion word (ADC0H:ADC0L) is within the range defined by ADC0GTH:ADC0GTL and ADC0LTH:ADC0LTL (if 0x0040 < ADC0H:ADC0L < 0x0080). In the right example, and AD0WINT interrupt will be generated if the ADC0 conversion word is outside of the range defined by the ADC0GT and ADC0LT registers (if ADC0H:ADC0L < 0x0040 or ADC0H:ADC0L > 0x0080). Figure 5.6 shows an example using left-justified data with the same comparison values.

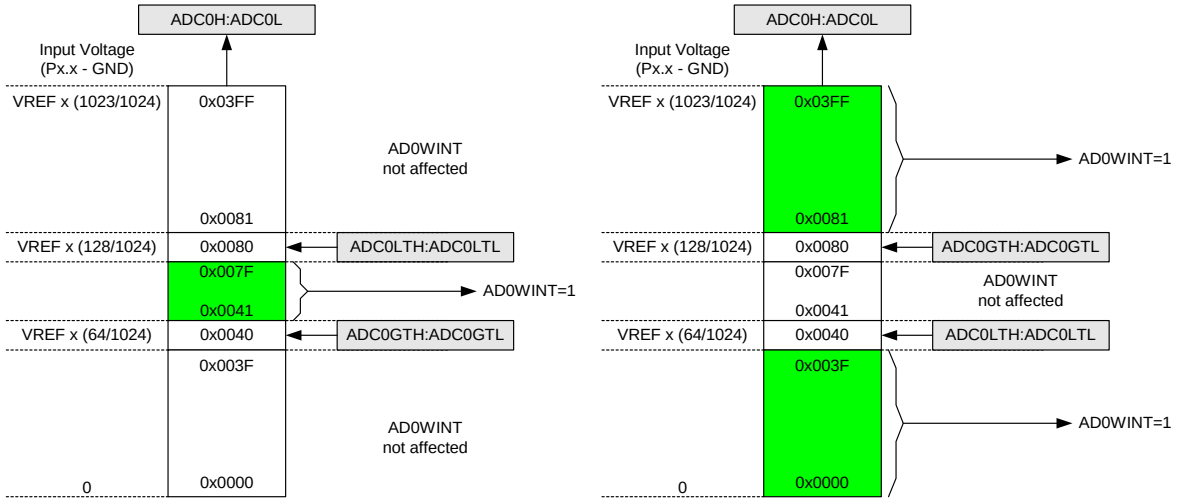

Figure 5.5. ADC Window Compare Example: Right-Justified Single-Ended Data

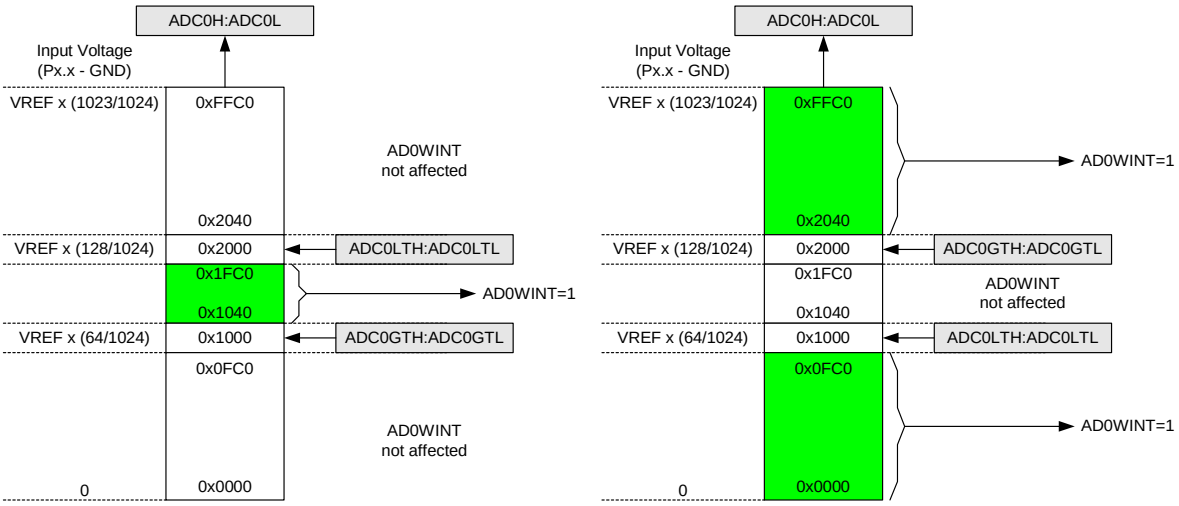

Figure 5.6. ADC Window Compare Example: Left-Justified Single-Ended Data

5.6.2. ADC0 Specifications

See “4. Electrical Characteristics” on page 40 for a detailed listing of ADC0 specifications.

5.7. ADC0 Analog Multiplexer

ADC0 on C8051F91x-C8051F90x has an analog multiplexer, referred to as AMUX0.

AMUX0 selects the positive inputs to the single-ended ADC0. Any of the following may be selected as the positive input: Port I/O pins, the on-chip temperature sensor, the VBAT Power Supply, Regulated Digital Supply Voltage (Output of VREG0), VDD/DC+ Supply, or the positive input may be connected to GND. The ADC0 input channels are selected in the ADC0MX register described in SFR Definition 5.12.

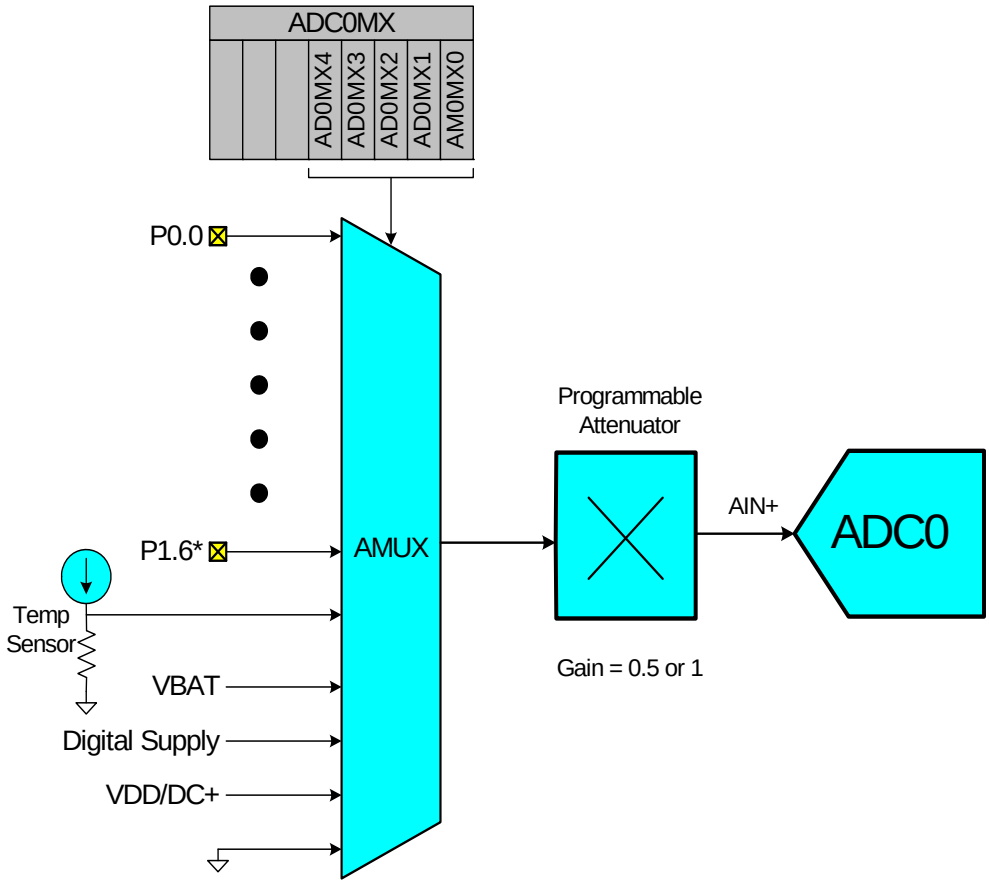

Figure 5.7. ADC0 Multiplexer Block Diagram

Important Note About ADC0 Input Configuration: Port pins selected as ADC0 inputs should be configured as analog inputs, and should be skipped by the Digital Crossbar. To configure a Port pin for analog input, set to 0 the corresponding bit in register PnMDIN and disable the digital driver (PnMDOUT = 0 and Port Latch = 1). To force the Crossbar to skip a Port pin, set to 1 the corresponding bit in register PnSKIP. See Section “21. Port Input/Output” on page 214 for more Port I/O configuration details.

SFR Definition 5.12. ADC0MX: ADC0 Input Channel Select

Bit	7	6	5	4	3	2	1	0
Name				AD0MX				
Type	R	R	R	R/W	R/W	R/W	R/W	R/W
Reset	0	0	0	1	1	1	1	1

SFR Page = 0x0; SFR Address = 0xBB

Bit	Name	Function
7:5	Unused	**Unused.** Read = 000b; Write = Don't Care.
4:0	AD0MX	**AMUX0 Positive Input Selection.** Selects the positive input channel for ADC0. 00000: P0.0 00001: P0.1 00010: P0.2 00011: P0.3 00100: P0.4 00101: P0.5 00110: P0.6 00111: P0.7 01000: P1.0 01001: P1.1 01010: P1.2 01011: P1.3 01100: P1.4 01101: P1.5 01110: P1.6 01111: Reserved, 10000: Reserved. 10001: Reserved. 10010: Reserved. 10011: Reserved. 10100: Reserved. 10101: Reserved. 10110: Reserved. 10111: Reserved. 11000: Reserved. 11001: Reserved. 11010: Reserved. 11011: Temperature Sensor 11100: VBAT Supply Voltage (0.9–1.8 V) or (1.8–3.6 V) 11101: Digital Supply Voltage (VREG0 Output, 1.7 V Typical) 11110: VDD/DC+ Supply Voltage (1.8–3.6 V) 11111: Ground

5.8. Temperature Sensor

An on-chip temperature sensor is included on the C8051F91x-C8051F90x which can be directly accessed via the ADC multiplexer in single-ended configuration. To use the ADC to measure the temperature sensor, the ADC mux channel should select the temperature sensor. The temperature sensor transfer function is shown in Figure 5.8. The output voltage (V_{TEMP}) is the positive ADC input when the ADC multiplexer is set correctly. The TEMPE bit in register REF0CN enables/disables the temperature sensor, as described in SFR Definition 5.15. While disabled, the temperature sensor defaults to a high impedance state and any ADC measurements performed on the sensor will result in meaningless data. Refer to Table 4.10 for the slope and offset parameters of the temperature sensor.

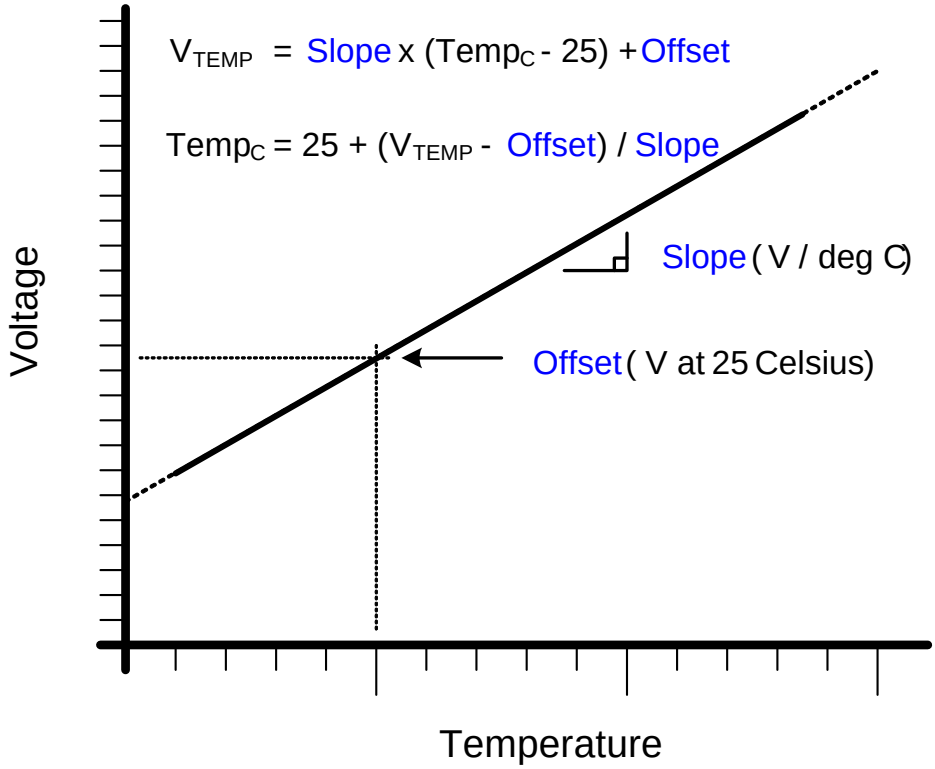

Figure 5.8. Temperature Sensor Transfer Function

5.8.1. Calibration

The uncalibrated temperature sensor output is extremely linear and suitable for relative temperature measurements (see Table 4.11 for linearity specifications). For absolute temperature measurements, offset and/or gain calibration is recommended. Typically a 1-point (offset) calibration includes the following steps:

1. Control/measure the ambient temperature (this temperature must be known).
2. Power the device, and delay for a few seconds to allow for self-heating.
3. Perform an ADC conversion with the temperature sensor selected as the positive input and GND selected as the negative input.
4. Calculate the offset characteristics, and store this value in non-volatile memory for use with subsequent temperature sensor measurements.

Figure 5.9 shows the typical temperature sensor error assuming a 1-point calibration at 25 °C. **Parameters that affect ADC measurement, in particular the voltage reference value, will also affect temperature measurement.**

A single-point offset measurement of the temperature sensor is performed on each device during production test. The measurement is performed at 25 °C ±5 °C, using the ADC with the internal high speed reference buffer selected as the Voltage Reference. The direct ADC result of the measurement is stored in the SFR registers TOFFH and TOFFL, shown in SFR Definition 5.13 and SFR Definition 5.14.

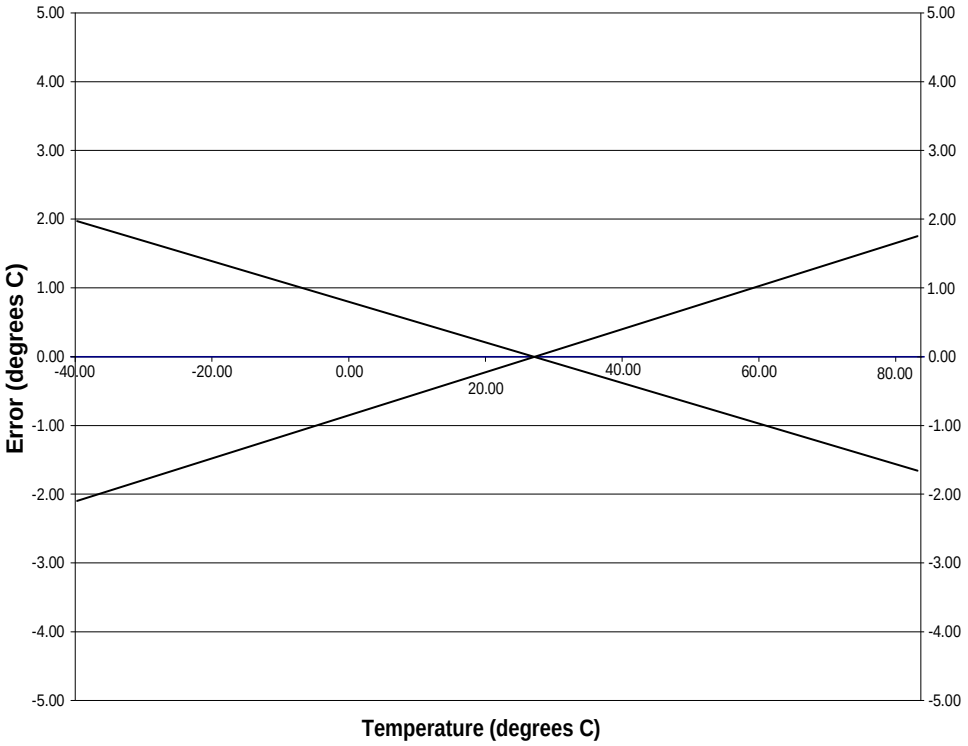

Figure 5.9. Temperature Sensor Error with 1-Point Calibration (V_{REF} = 1.68 V)

SFR Definition 5.13. TOFFH: ADC0 Data Word High Byte

Bit	7	6	5	4	3	2	1	0
Name	TOFF[9:2]							
Type	R	R	R	R	R	R	R	R
Reset	Varies	Varies	Varies	Varies	Varies	Varies	Varies	Varies

SFR Page = 0xF; SFR Address = 0x86

Bit	Name	Function
7:0	TOFF[9:2]	**Temperature Sensor Offset High Bits.** Most Significant Bits of the 10-bit temperature sensor offset measurement.

SFR Definition 5.14. TOFFL: ADC0 Data Word Low Byte

Bit	7	6	5	4	3	2	1	0
Name	TOFF[1:0]							
Type	R	R						
Reset	Varies	Varies	0	0	0	0	0	0

SFR Page = 0xF; SFR Address = 0x85

Bit	Name	Function
7:6	TOFF[1:0]	**Temperature Sensor Offset Low Bits.** Least Significant Bits of the 10-bit temperature sensor offset measurement.
5:0	Unused	**Unused.** Read = 0; Write = Don't Care.

5.9. Voltage and Ground Reference Options

The voltage reference MUX is configurable to use an externally connected voltage reference, one of two internal voltage references, or one of two power supply voltages (see Figure 5.10). The ground reference MUX allows the ground reference for ADC0 to be selected between the ground pin (GND) or a port pin dedicated to analog ground (P0.1/AGND).

The voltage and ground reference options are configured using the REF0CN SFR described on page 89. Electrical specifications are can be found in the Electrical Specifications Chapter.

Important Note About the V_{REF} and AGND Inputs: Port pins are used as the external V_{REF} and AGND inputs. When using an external voltage reference or the internal precision reference, P0.0/VREF should be configured as an analog input and skipped by the Digital Crossbar. When using AGND as the ground reference to ADC0, P0.1/AGND should be configured as an analog input and skipped by the Digital Crossbar. Refer to Section “21. Port Input/Output” on page 214 for complete Port I/O configuration details. The external reference voltage must be within the range $0 \leq V_{REF} \leq$ VDD/DC+ and the external ground reference must be at the same DC voltage potential as GND.

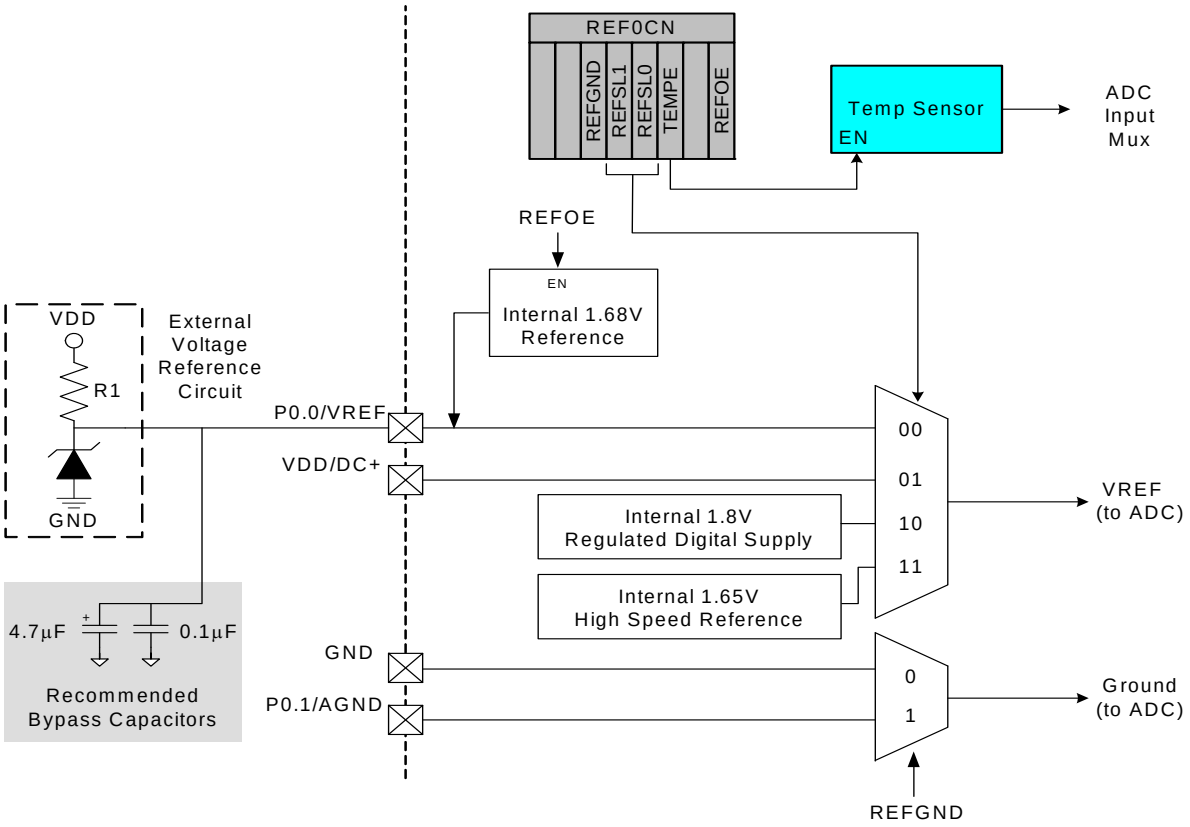

Figure 5.10. Voltage Reference Functional Block Diagram

5.10. External Voltage References

To use an external voltage reference, REFSL[1:0] should be set to 00 and the internal 1.68 V precision reference should be disabled by setting REFOE to 0. Bypass capacitors should be added as recommended by the manufacturer of the external voltage reference.

5.11. Internal Voltage References

For applications requiring the maximum number of port I/O pins, or very short VREF turn-on time, the 1.65 V high-speed reference will be the best internal reference option to choose. The high speed internal reference is selected by setting REFSL[1:0] to 11. When selected, the high speed internal reference will be automatically enabled/disabled on an as-needed basis by ADC0.

For applications requiring the highest absolute accuracy, the 1.68 V precision voltage reference will be the best internal reference option to choose. The 1.68 V precision reference may be enabled and selected by setting REFOE to 1 and REFSL[1:0] to 00. An external capacitor of at least 0.1 µF is recommended when using the precision voltage reference.

In applications that leave the precision internal oscillator always running, there is no additional power required to use the precision voltage reference. In all other applications, using the high speed reference will result in lower overall power consumption due to its minimal startup time and the fact that it remains in a low power state when an ADC conversion is not taking place.

Note: When using the precision internal oscillator as the system clock source, the precision voltage reference should not be enabled from a disabled state. To use the precision oscillator and the precision voltage reference simultaneously, the precision voltage reference should be enabled first and allowed to settle to its final value (charging the external capacitor) before the precision oscillator is started and selected as the system clock.

For applications with a non-varying power supply voltage, using the power supply as the voltage reference can provide ADC0 with added dynamic range at the cost of reduced power supply noise rejection. To use the 1.8 to 3.6 V power supply voltage (V_{DD}/DC+) or the 1.8 V regulated digital supply voltage as the reference source, REFSL[1:0] should be set to 01 or 10, respectively.

5.12. Analog Ground Reference

To prevent ground noise generated by switching digital logic from affecting sensitive analog measurements, a separate analog ground reference option is available. When enabled, the ground reference for ADC0 during both the tracking/sampling and the conversion periods is taken from the P0.1/AGND pin. Any external sensors sampled by ADC0 should be referenced to the P0.1/AGND pin. This pin should be connected to the ground terminal of any external sensors sampled by ADC0. If an external voltage reference is used, the P0.1/AGND pin should be connected to the ground of the external reference and its associated decoupling capacitor. If the 1.68 V precision internal reference is used, then P0.1/AGND should be connected to the ground terminal of its external decoupling capacitor. The separate analog ground reference option is enabled by setting REFGND to 1. Note that when sampling the internal temperature sensor, the internal chip ground is always used for the sampling operation, regardless of the setting of the REFGND bit. Similarly, whenever the internal 1.65 V high-speed reference is selected, the internal chip ground is always used during the conversion period, regardless of the setting of the REFGND bit.

5.13. Temperature Sensor Enable

The TEMPE bit in register REF0CN enables/disables the temperature sensor. While disabled, the temperature sensor defaults to a high impedance state and any ADC0 measurements performed on the sensor result in meaningless data. See Section “5.8. Temperature Sensor” on page 84 for details on temperature sensor characteristics when it is enabled.

SFR Definition 5.15. REF0CN: Voltage Reference Control

Bit	7	6	5	4	3	2	1	0
Name			REFGND	REFSL		TEMPE		REFOE
Type	R	R	R/W	R/W	R/W	R/W	R	R/W
Reset	0	0	0	1	1	0	0	0

SFR Page = 0x0; SFR Address = 0xD1

Bit	Name	Function
7:6	Unused	**Unused.** Read = 00b; Write = Don't Care.
5	REFGND	**Analog Ground Reference.** Selects the ADC0 ground reference. 0: The ADC0 ground reference is the GND pin. 1: The ADC0 ground reference is the P0.1/AGND pin.
4:3	REFSL	**Voltage Reference Select.** Selects the ADC0 voltage reference. 00: The ADC0 voltage reference is the P0.0/VREF pin. 01: The ADC0 voltage reference is the VDD/DC+ pin. 10: The ADC0 voltage reference is the internal 1.8 V digital supply voltage. 11: The ADC0 voltage reference is the internal 1.65 V high speed voltage reference.
2	TEMPE	**Temperature Sensor Enable.** Enables/Disables the internal temperature sensor. 0: Temperature Sensor Disabled. 1: Temperature Sensor Enabled.
1	Unused	**Unused.** Read = 0b; Write = Don't Care.
0	REFOE	**Internal Voltage Reference Output Enable.** Connects/Disconnects the internal voltage reference to the P0.0/VREF pin. 0: Internal 1.68 V Precision Voltage Reference disabled and not connected to P0.0/VREF. 1: Internal 1.68 V Precision Voltage Reference enabled and connected to P0.0/VREF.

5.14. Voltage Reference Electrical Specifications

See Table 4.12 on page 60 for detailed Voltage Reference Electrical Specifications.

6. Programmable Current Reference (IREF0)

C8051F91x-C8051F90x devices include an on-chip programmable current reference (source or sink) with two output current settings: Low Power Mode and High Current Mode. The maximum current output in Low Power Mode is 63 µA (1 µA steps) and the maximum current output in High Current Mode is 504 µA (8 µA steps).

The current source/sink is controlled though the IREF0CN special function register. It is enabled by setting the desired output current to a non-zero value. It is disabled by writing 0x00 to IREF0CN. The port I/O pin associated with ISRC0 should be configured as an analog input and skipped in the Crossbar. See Section “21. Port Input/Output” on page 214 for more details.

SFR Definition 6.1. IREF0CN: Current Reference Control

Bit	7	6	5	4	3	2	1	0
Name	SINK	MODE	IREF0DAT					
Type	R/W	R/W	R/W					
Reset	0	0	0	0	0	0	0	0

SFR Page = 0x0; SFR Address = 0xB9

Bit	Name	Function
7	SINK	**IREF0 Current Sink Enable.** Selects if IREF0 is a current source or a current sink. 0: IREF0 is a current source. 1: IREF0 is a current sink.
6	MDSEL	**IREF0 Output Mode Select.** Selects Low Power or High Current Mode. 0: Low Power Mode is selected (step size = 1 µA). 1: High Current Mode is selected (step size = 8 µA).
5:0	IREF0DAT[5:0]	**IREF0 Data Word.** Specifies the number of steps required to achieve the desired output current. Output current = direction x step size x IREF0DAT. IREF0 is in a low power state when IREF0DAT is set to 0x00.

6.1. PWM Enhanced Mode

On ‘F912 and ‘F902 devices, the precision of the current reference can be increased by fine tuning the IREF0 output using a PWM signal generated by the PCA. This mode allows the IREF0DAT bits to perform a course adjustment on the IREF0 output. Any available PCA channel can perform a fine adjustment on the IREF0 output. When enabled (PWMEN = 1), the CEX signal selected using the PWMSS bit field is internally routed to IREF0 to control the on time of a current source having the weight of 2 LSBs. With the two least significant bits of IREF0DAT set to 00b, applying a 100% duty cycle on the CEX signal will be equivalent to setting the two LSBs of IREF0DAT to 10b. PWM enhanced mode is enabled and setup using the IREF0CF register.

SFR Definition 6.2. IREF0CF: Current Reference Configuration

Bit	7	6	5	4	3	2	1	0
Name	PWMEN					PWMSS[2:0]		
Type	R/W	R/W	R/W	R/W	R/W	R/W		
Reset	0	0	0	0	0	0	0	0

SFR Page = 0xF; SFR Address = 0xB9

Bit	Name	Function
7	PWMEN	**PWM Enhanced Mode Enable.** Enables the PWM Enhanced Mode. Only available on ‘F912 and ‘F902 devices. 0: PWM Enhanced Mode disabled. 1: PWM Enhanced Mode enabled.
6:3	Unused	**Unused.** Read = 00b, Write = don’t care.
2:0	PWMSS[2:0]	**PWM Source Select.** Selects the PCA channel to use for the fine-tuning control signal. Only available on ‘F912 and ‘F902 devices. 000: CEX0 selected as fine-tuning control signal. 001: CEX1 selected as fine-tuning control signal. 010: CEX2 selected as fine-tuning control signal. 011: CEX3 selected as fine-tuning control signal. 100: CEX4 selected as fine-tuning control signal. 101: CEX5 selected as fine tuning control signal. All Other Values: Reserved.

6.2. IREF0 Specifications

See Table 4.13 on page 61 for a detailed listing of IREF0 specifications.

7. Comparators

C8051F91x-C8051F90x devices include two on-chip programmable voltage comparators: Comparator 0 (CPT0) is shown in Figure 7.1; Comparator 1 (CPT1) is shown in Figure 7.2. The two comparators operate identically, but may differ in their ability to be used as reset or wake-up sources. See the Reset Sources chapter and the Power Management chapter for details on reset sources and low power mode wake-up sources, respectively.

The Comparator offers programmable response time and hysteresis, an analog input multiplexer, and two outputs that are optionally available at the Port pins: a digital synchronous “latched” output (CP0, CP1), or a digital asynchronous “raw” output (CP0A, CP1A). The asynchronous CP0A signal is available even when the system clock is not active. This allows the Comparator to operate and generate an output when the device is in some low power modes.

7.1. Comparator Inputs

Each Comparator performs an analog comparison of the voltage levels at its positive (CP0+ or CP1+) and negative (CP0- or CP1-) input. Both comparators support multiple port pin inputs multiplexed to their positive and negative comparator inputs using analog input multiplexers. The analog input multiplexers are completely under software control and configured using SFR registers. See Section “7.6. Comparator0 and Comparator1 Analog Multiplexers” on page 100 for details on how to select and configure Comparator inputs.

Important Note About Comparator Inputs: The Port pins selected as Comparator inputs should be configured as analog inputs and skipped by the Crossbar. See the Port I/O chapter for more details on how to configure Port I/O pins as Analog Inputs. The Comparator may also be used to compare the logic level of digital signals, however, Port I/O pins configured as digital inputs must be driven to a valid logic state (HIGH or LOW) to avoid increased power consumption.

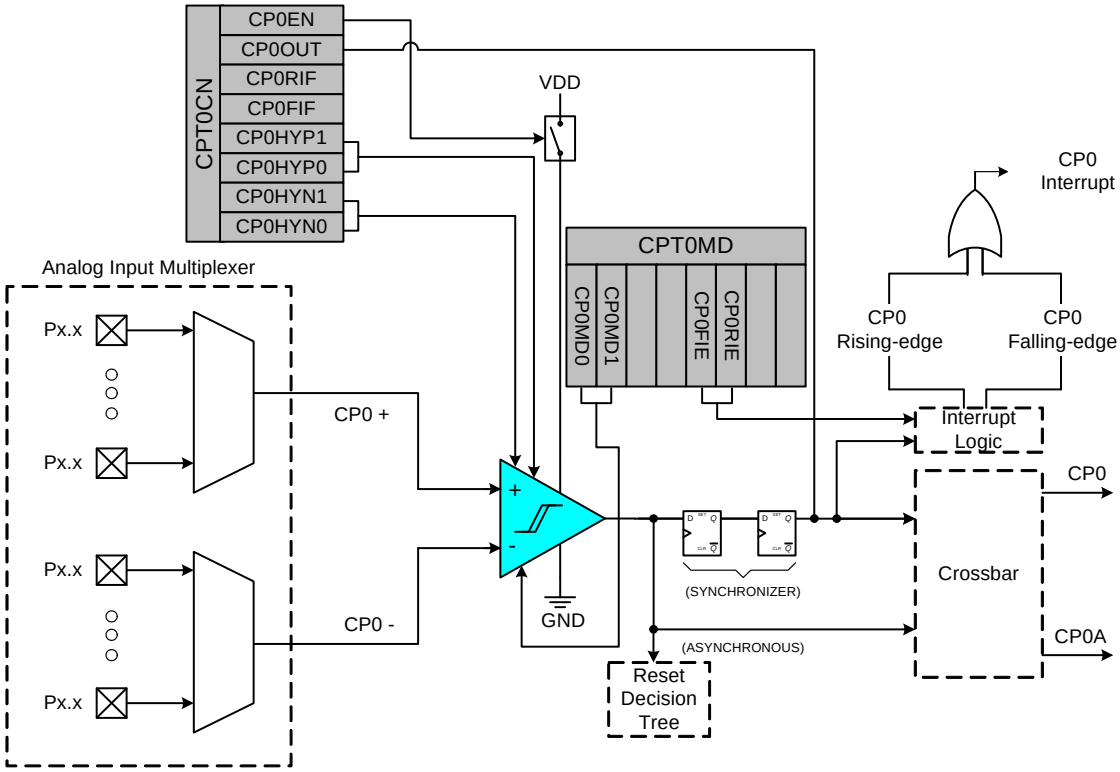

Figure 7.1. Comparator 0 Functional Block Diagram

7.2. Comparator Outputs

When a comparator is enabled, its output is a logic 1 if the voltage at the positive input is higher than the voltage at the negative input. When disabled, the comparator output is a logic 0. The comparator output is synchronized with the system clock as shown in Figure 7.2. The synchronous “latched” output (CP0, CP1) can be polled in software (CPnOUT bit), used as an interrupt source, or routed to a Port pin (configured for digital I/O) through the Crossbar.

The asynchronous “raw” comparator output (CP0A, CP1A) is used by the low power mode wake-up logic and reset decision logic. See the Power Options chapter and the Reset Sources chapter for more details on how the asynchronous comparator outputs are used to make wake-up and reset decisions. The asynchronous comparator output can also be routed directly to a Port pin through the Crossbar, and is available for use outside the device even if the system clock is stopped.

When using a Comparator as an interrupt source, Comparator interrupts can be generated on rising-edge and/or falling-edge comparator output transitions. Two independent interrupt flags (CPnRIF and CPnFIF) allow software to determine which edge caused the Comparator interrupt. The comparator rising-edge and falling-edge interrupt flags are set by hardware when a corresponding edge is detected regardless of the interrupt enable state. Once set, these bits remain set until cleared by software.

The rising-edge and falling-edge interrupts can be individually enabled using the CPnRIE and CPnFIE interrupt enable bits in the CPTnMD register. In order for the CPnRIF and/or CPnFIF interrupt flags to generate an interrupt request to the CPU, the Comparator must be enabled as an interrupt source and global interrupts must be enabled. See the Interrupt Handler chapter for additional information.

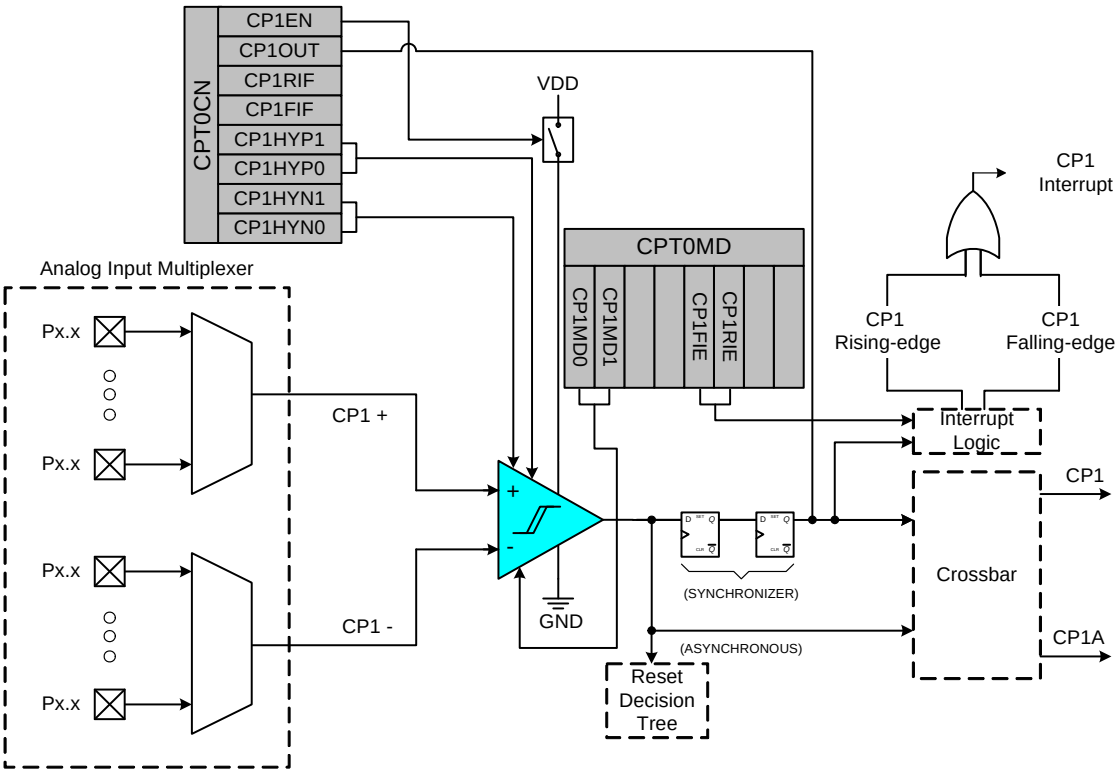

Figure 7.2. Comparator 1 Functional Block Diagram

7.3. Comparator Response Time

Comparator response time may be configured in software via the CPTnMD registers described on “CPT0MD: Comparator 0 Mode Selection” on page 97 and “CPT1MD: Comparator 1 Mode Selection” on page 99. Four response time settings are available: Mode 0 (Fastest Response Time), Mode 1, Mode 2, and Mode 3 (Lowest Power). Selecting a longer response time reduces the Comparator active supply current. The Comparators also have low power shutdown state, which is entered any time the comparator is disabled. Comparator rising edge and falling edge response times are typically not equal. See Table 4.14 on page 62 for complete comparator timing and supply current specifications.

7.4. Comparator Hysteresis

The Comparators feature software-programmable hysteresis that can be used to stabilize the comparator output while a transition is occurring on the input. Using the CPTnCN registers, the user can program both the amount of hysteresis voltage (referred to the input voltage) and the positive and negative-going symmetry of this hysteresis around the threshold voltage (i.e., the comparator negative input).

Figure 7.3 shows that when positive hysteresis is enabled, the comparator output does not transition from logic 0 to logic 1 until the comparator positive input voltage has exceeded the threshold voltage by an amount equal to the programmed hysteresis. It also shows that when negative hysteresis is enabled, the comparator output does not transition from logic 1 to logic 0 until the comparator positive input voltage has fallen below the threshold voltage by an amount equal to the programmed hysteresis.

The amount of positive hysteresis is determined by the settings of the CPnHYP bits in the CPTnCN register and the amount of negative hysteresis voltage is determined by the settings of the CPnHYN bits in the same register. Settings of 20, 10, 5, or 0 mV can be programmed for both positive and negative hysteresis. See Section “Table 4.14. Comparator Electrical Characteristics” on page 62 for complete comparator hysteresis specifications.

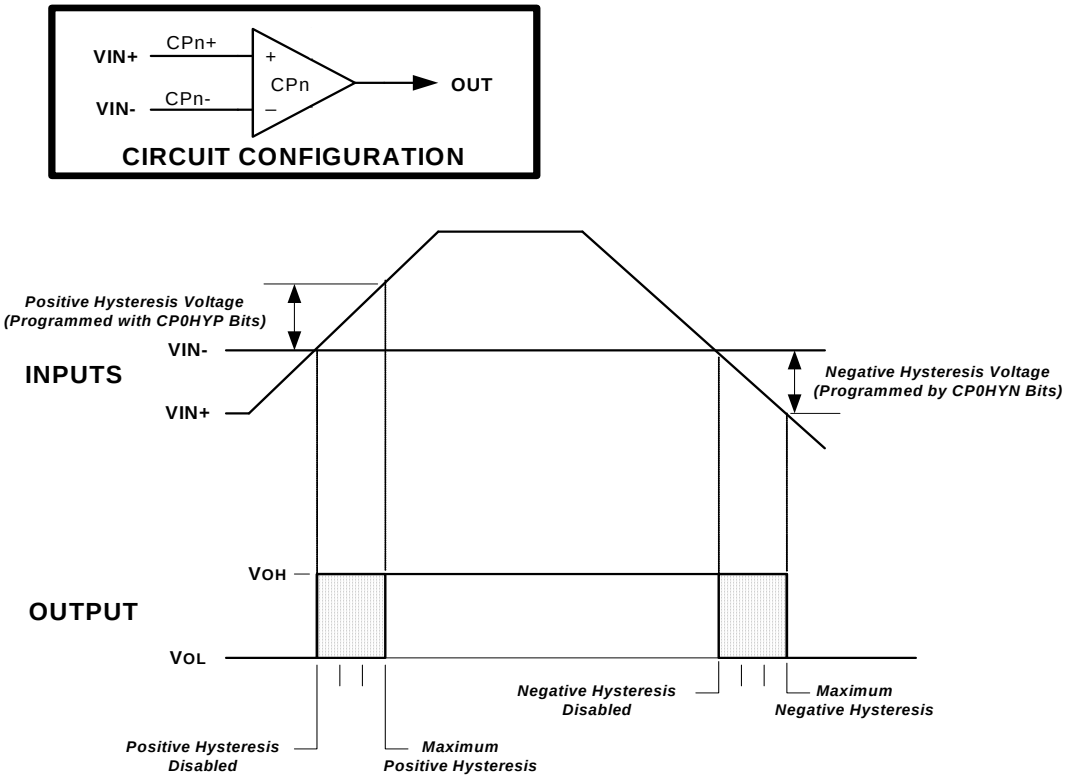

Figure 7.3. Comparator Hysteresis Plot

7.5. Comparator Register Descriptions

The SFRs used to enable and configure the comparators are described in the following register descriptions. A Comparator must be enabled by setting the CPnEN bit to logic 1 before it can be used. From an enabled state, a comparator can be disabled and placed in a low power state by clearing the CPnEN bit to logic 0.

Important Note About Comparator Settings: False rising and falling edges can be detected by the Comparator while powering on or if changes are made to the hysteresis or response time control bits. Therefore, it is recommended that the rising-edge and falling-edge flags be explicitly cleared to logic 0 a short time after the comparator is enabled or its mode bits have been changed. The Comparator Power Up Time is specified in Section “Table 4.14. Comparator Electrical Characteristics” on page 62.

SFR Definition 7.1. CPT0CN: Comparator 0 Control

Bit	7	6	5	4	3	2	1	0
Name	CP0EN	CP0OUT	CP0RIF	CP0FIF	CP0HYP[1:0]		CP0HYN[1:0]	
Type	R/W	R	R/W	R/W	R/W		R/W	
Reset	0	0	0	0	0	0	0	0

SFR Page= 0x0; SFR Address = 0x9B

Bit	Name	Function
7	CP0EN	**Comparator0 Enable Bit.** 0: Comparator0 Disabled. 1: Comparator0 Enabled.
6	CP0OUT	**Comparator0 Output State Flag.** 0: Voltage on CP0+ < CP0–. 1: Voltage on CP0+ > CP0–.
5	CP0RIF	**Comparator0 Rising-Edge Flag. Must be cleared by software.** 0: No Comparator0 Rising Edge has occurred since this flag was last cleared. 1: Comparator0 Rising Edge has occurred.
4	CP0FIF	**Comparator0 Falling-Edge Flag. Must be cleared by software.** 0: No Comparator0 Falling-Edge has occurred since this flag was last cleared. 1: Comparator0 Falling-Edge has occurred.
3-2	CP0HYP[1:0]	**Comparator0 Positive Hysteresis Control Bits.** 00: Positive Hysteresis Disabled. 01: Positive Hysteresis = Hysteresis 1. 10: Positive Hysteresis = Hysteresis 2. 11: Positive Hysteresis = Hysteresis 3 (Maximum).
1:0	CP0HYN[1:0]	**Comparator0 Negative Hysteresis Control Bits.** 00: Negative Hysteresis Disabled. 01: Negative Hysteresis = Hysteresis 1. 10: Negative Hysteresis = Hysteresis 2. 11: Negative Hysteresis = Hysteresis 3 (Maximum).

SFR Definition 7.2. CPT0MD: Comparator 0 Mode Selection

Bit	7	6	5	4	3	2	1	0
Name			CP0RIE	CP0FIE			CP0MD[1:0]	
Type	R/W	R	R/W	R/W	R	R	R/W	
Reset	1	0	0	0	0	0	1	0

SFR Page = All Pages; SFR Address = 0x9D

Bit	Name	Function
7	Reserved	**Reserved.** Read = 1b, Must Write 1b.
6	Unused	**Unused.** Read = 0b, Write = don't care.
5	CP0RIE	**Comparator0 Rising-Edge Interrupt Enable.** 0: Comparator0 Rising-edge interrupt disabled. 1: Comparator0 Rising-edge interrupt enabled.
4	CP0FIE	**Comparator0 Falling-Edge Interrupt Enable.** 0: Comparator0 Falling-edge interrupt disabled. 1: Comparator0 Falling-edge interrupt enabled.
3:2	Unused	**Unused.** Read = 00b, Write = don't care.
1:0	CP0MD[1:0]	**Comparator0 Mode Select** These bits affect the response time and power consumption for Comparator0. 00: Mode 0 (Fastest Response Time, Highest Power Consumption) 01: Mode 1 10: Mode 2 11: Mode 3 (Slowest Response Time, Lowest Power Consumption)

SFR Definition 7.3. CPT1CN: Comparator 1 Control

Bit	7	6	5	4	3	2	1	0
Name	CP1EN	CP1OUT	CP1RIF	CP1FIF	CP1HYP[1:0]		CP1HYN[1:0]	
Type	R/W	R	R/W	R/W	R/W		R/W	
Reset	0	0	0	0	0	0	0	0

SFR Page= 0x0; SFR Address = 0x9A

Bit	Name	Function
7	CP1EN	**Comparator1 Enable Bit.** 0: Comparator1 Disabled. 1: Comparator1 Enabled.
6	CP1OUT	**Comparator1 Output State Flag.** 0: Voltage on CP1+ < CP1–. 1: Voltage on CP1+ > CP1–.
5	CP1RIF	**Comparator1 Rising-Edge Flag. Must be cleared by software.** 0: No Comparator1 Rising Edge has occurred since this flag was last cleared. 1: Comparator1 Rising Edge has occurred.
4	CP1FIF	**Comparator1 Falling-Edge Flag. Must be cleared by software.** 0: No Comparator1 Falling-Edge has occurred since this flag was last cleared. 1: Comparator1 Falling-Edge has occurred.
3:2	CP1HYP[1:0]	**Comparator1 Positive Hysteresis Control Bits.** 00: Positive Hysteresis Disabled. 01: Positive Hysteresis = Hysteresis 1. 10: Positive Hysteresis = Hysteresis 2. 11: Positive Hysteresis = Hysteresis 3 (Maximum).
1:0	CP1HYN[1:0]	**Comparator1 Negative Hysteresis Control Bits.** 00: Negative Hysteresis Disabled. 01: Negative Hysteresis = Hysteresis 1. 10: Negative Hysteresis = Hysteresis 2. 11: Negative Hysteresis = Hysteresis 3 (Maximum).

SFR Definition 7.4. CPT1MD: Comparator 1 Mode Selection

Bit	7	6	5	4	3	2	1	0
Name			CP1RIE	CP1FIE			CP1MD[1:0]	
Type	R/W	R	R/W	R/W	R	R	R/W	
Reset	1	0	0	0	0	0	1	0

SFR Page = 0x0; SFR Address = 0x9C

Bit	Name	Function
7	Reserved	**Reserved.** Read = 1b, Must Write 1b.
6	Unused	**Unused.** Read = 00b, Write = don't care.
5	CP1RIE	**Comparator1 Rising-Edge Interrupt Enable.** 0: Comparator1 Rising-edge interrupt disabled. 1: Comparator1 Rising-edge interrupt enabled.
4	CP1FIE	**Comparator1 Falling-Edge Interrupt Enable.** 0: Comparator1 Falling-edge interrupt disabled. 1: Comparator1 Falling-edge interrupt enabled.
3:2	Unused	**Unused.** Read = 00b, Write = don't care.
1:0	CP1MD[1:0]	**Comparator1 Mode Select** These bits affect the response time and power consumption for Comparator1. 00: Mode 0 (Fastest Response Time, Highest Power Consumption) 01: Mode 1 10: Mode 2 11: Mode 3 (Slowest Response Time, Lowest Power Consumption)

7.6. Comparator0 and Comparator1 Analog Multiplexers

Comparator0 and Comparator1 on C8051F91x-C8051F90x devices have analog input multiplexers to connect Port I/O pins and internal signals the comparator inputs; CP0+/CP0- are the positive and negative input multiplexers for Comparator0 and CP1+/CP1- are the positive and negative input multiplexers for Comparator1.

The comparator input multiplexers directly support capacitive touch switches. When the Capacitive Touch Sense Compare input is selected on the positive or negative multiplexer, any Port I/O pin connected to the other multiplexer can be directly connected to a capacitive touch switch with no additional external components. The Capacitive Touch Sense Compare provides the appropriate reference level for detecting when the capacitive touch switches have charged or discharged through the on-chip Rsense resistor. The Comparator outputs can be routed to Timer2 or Timer3 for capturing sense capacitor's charge and discharge time. See Section "25. Timers" on page 279 for details. See Application Note AN338 for details on Capacitive Touch Switch sensing.

Any of the following may be selected as comparator inputs: Port I/O pins, Capacitive Touch Sense Compare, VDD/DC+ Supply Voltage, Regulated Digital Supply Voltage (Output of VREG0), the VBAT Supply voltage or ground. The Comparator's supply voltage divided by 2 is also available as an input; the resistors used to divide the voltage only draw current when this setting is selected. The Comparator input multiplexers are configured using the CPT0MX and CPT1MX registers described in SFR Definition 7.5 and SFR Definition 7.6.

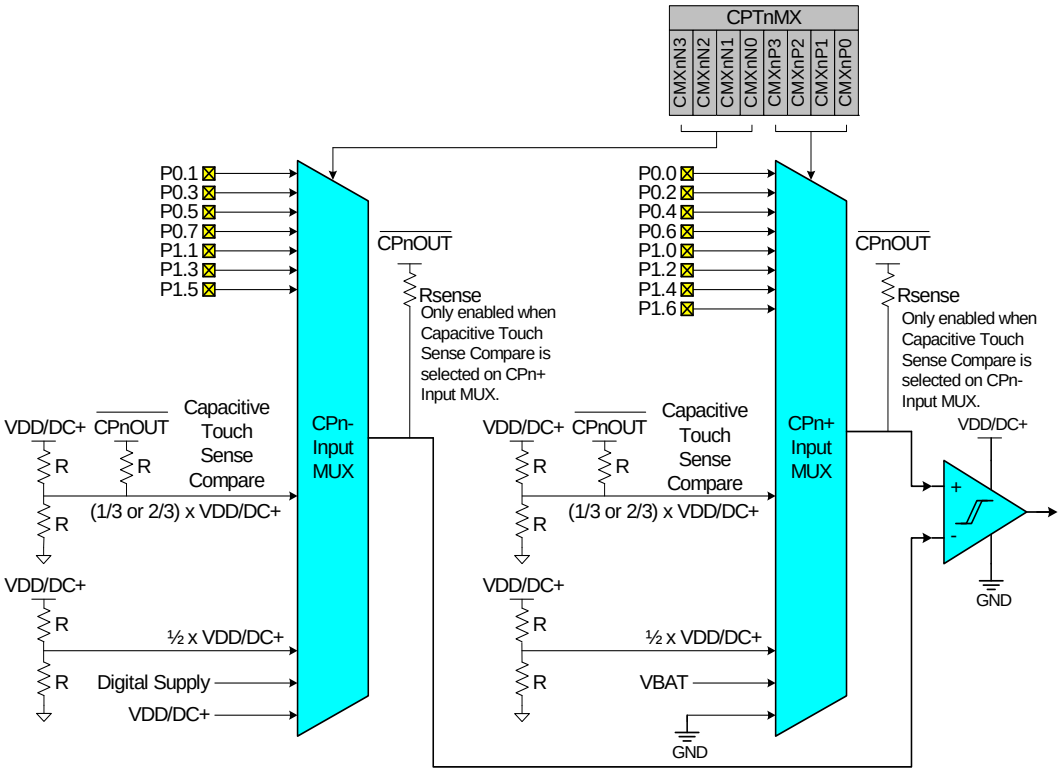

Figure 7.4. CPn Multiplexer Block Diagram

Important Note About Comparator Input Configuration: Port pins selected as comparator inputs should be configured as analog inputs, and should be skipped by the Digital Crossbar. To configure a Port pin for analog input, set to 0 the corresponding bit in register PnMDIN and disable the digital driver (PnMDOUT = 0 and Port Latch = 1). To force the Crossbar to skip a Port pin, set to 1 the corresponding bit in register PnSKIP. See Section "21. Port Input/Output" on page 214 for more Port I/O configuration details.

SFR Definition 7.5. CPT0MX: Comparator0 Input Channel Select

Bit	7	6	5	4	3	2	1	0
Name	CMX0N[3:0]				CMX0P[3:0]			
Type	R/W	R/W	R/W	R/W	R/W	R/W	R/W	R/W
Reset	1	1	1	1	1	1	1	1

SFR Page = 0x0; SFR Address = 0x9F

Bit	Name	Function
7:4	CMX0N	**Comparator0 Negative Input Selection.** Selects the negative input channel for Comparator0. 0000: P0.1 — 1000: Reserved 0001: P0.3 — 1001: Reserved 0010: P0.5 — 1010: Reserved 0011: P0.7 — 1011: Reserved 0100: P1.1 — 1100: Capacitive Touch Sense Compare 0101: P1.3 — 1101: VDD/DC+ divided by 2 0110: P1.5 — 1110: Digital Supply Voltage 0111: Reserved — 1111: Ground
3:0	CMX0P	**Comparator0 Positive Input Selection.** Selects the positive input channel for Comparator0. 0000: P0.0 — 1000: Reserved 0001: P0.2 — 1001: Reserved 0010: P0.4 — 1010: Reserved 0011: P0.6 — 1011: Reserved 0100: P1.0 — 1100: Capacitive Touch Sense Compare 0101: P1.2 — 1101: VDD/DC+ divided by 2 0110: P1.4 — 1110: VBAT Supply Voltage 0111: P1.6 — 1111: VDD/DC+ Supply Voltage

SFR Definition 7.6. CPT1MX: Comparator1 Input Channel Select

Bit	7	6	5	4	3	2	1	0
Name	CMX1N[3:0]				CMX1P[3:0]			
Type	R/W	R/W	R/W	R/W	R/W	R/W	R/W	R/W
Reset	1	1	1	1	1	1	1	1

SFR Page = 0x0; SFR Address = 0x9E

Bit	Name	Function
7:4	CMX1N	**Comparator1 Negative Input Selection.** Selects the negative input channel for Comparator1. 0000: P0.1 0001: P0.3 0010: P0.5 0011: P0.7 0100: P1.1 0101: P1.3 0110: P1.5 0111: Reserved 1000: Reserved 1001: Reserved 1010: Reserved 1011: Reserved 1100: Capacitive Touch Sense Compare 1101: VDD/DC+ divided by 2 1110: Digital Supply Voltage 1111: Ground
3:0	CMX1P	**Comparator1 Positive Input Selection.** Selects the positive input channel for Comparator1. 0000: P0.0 0001: P0.2 0010: P0.4 0011: P0.6 0100: P1.0 0101: P1.2 0110: P1.4 0111: P1.6 1000: Reserved 1001: Reserved 1010: Reserved 1011: Reserved 1100: Capacitive Touch Sense Compare 1101: VDD/DC+ divided by 2 1110: VBAT Supply Voltage 1111: VDD/DC+ Supply Voltage

8. CIP-51 Microcontroller

The MCU system controller core is the CIP-51 microcontroller. The CIP-51 is fully compatible with the MCS-51™ instruction set; standard 803x/805x assemblers and compilers can be used to develop software. The MCU family has a superset of all the peripherals included with a standard 8051. The CIP-51 also includes on-chip debug hardware (see description in Section 27), and interfaces directly with the analog and digital subsystems providing a complete data acquisition or control-system solution in a single integrated circuit.

The CIP-51 Microcontroller core implements the standard 8051 organization and peripherals as well as additional custom peripherals and functions to extend its capability (see Figure 8.1 for a block diagram). The CIP-51 includes the following features:

- Fully Compatible with MCS-51 Instruction Set
- 25 MIPS Peak Throughput with 25 MHz Clock
- 0 to 25 MHz Clock Frequency
- Extended Interrupt Handler
- Reset Input
- Power Management Modes
- On-chip Debug Logic
- Program and Data Memory Security

8.1. Performance

The CIP-51 employs a pipelined architecture that greatly increases its instruction throughput over the standard 8051 architecture. In a standard 8051, all instructions except for MUL and DIV take 12 or 24 system clock cycles to execute, and usually have a maximum system clock of 12 MHz. By contrast, the CIP-51 core executes 70% of its instructions in one or two system clock cycles, with no instructions taking more than eight system clock cycles.

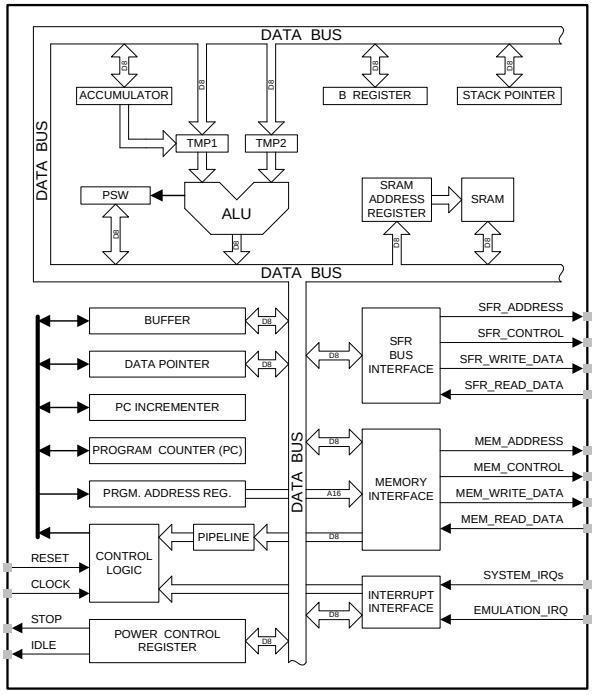

Figure 8.1. CIP-51 Block Diagram

With the CIP-51's maximum system clock at 25 MHz, it has a peak throughput of 25 MIPS. The CIP-51 has a total of 109 instructions. The table below shows the total number of instructions that require each execution time.

Clocks to Execute	1	2	2/3	3	3/4	4	4/5	5	8
Number of Instructions	26	50	5	14	7	3	1	2	1

8.2. Programming and Debugging Support

In-system programming of the Flash program memory and communication with on-chip debug support logic is accomplished via the Silicon Labs 2-Wire Development Interface (C2).

The on-chip debug support logic facilitates full speed in-circuit debugging, allowing the setting of hardware breakpoints, starting, stopping and single stepping through program execution (including interrupt service routines), examination of the program's call stack, and reading/writing the contents of registers and memory. This method of on-chip debugging is completely non-intrusive, requiring no RAM, Stack, timers, or other on-chip resources. C2 details can be found in Section “27. C2 Interface” on page 322.

The CIP-51 is supported by development tools from Silicon Labs and third party vendors. Silicon Labs provides an integrated development environment (IDE) including editor, debugger and programmer. The IDE's debugger and programmer interface to the CIP-51 via the C2 interface to provide fast and efficient in-system device programming and debugging. Third party macro assemblers and C compilers are also available.

8.3. Instruction Set

The instruction set of the CIP-51 System Controller is fully compatible with the standard MCS-51™ instruction set. Standard 8051 development tools can be used to develop software for the CIP-51. All CIP-51 instructions are the binary and functional equivalent of their MCS-51™ counterparts, including opcodes, addressing modes and effect on PSW flags. However, instruction timing is different than that of the standard 8051.

8.3.1. Instruction and CPU Timing

In many 8051 implementations, a distinction is made between machine cycles and clock cycles, with machine cycles varying from 2 to 12 clock cycles in length. However, the CIP-51 implementation is based solely on clock cycle timing. All instruction timings are specified in terms of clock cycles.

Due to the pipelined architecture of the CIP-51, most instructions execute in the same number of clock cycles as there are program bytes in the instruction. Conditional branch instructions take one less clock cycle to complete when the branch is not taken as opposed to when the branch is taken. Table 8.1 is the CIP-51 Instruction Set Summary, which includes the mnemonic, number of bytes, and number of clock cycles for each instruction.

Table 8.1. CIP-51 Instruction Set Summary

Mnemonic	Description	Bytes	Clock Cycles
Arithmetic Operations			
ADD A, Rn	Add register to A	1	1
ADD A, direct	Add direct byte to A	2	2
ADD A, @Ri	Add indirect RAM to A	1	2
ADD A, #data	Add immediate to A	2	2
ADDC A, Rn	Add register to A with carry	1	1
ADDC A, direct	Add direct byte to A with carry	2	2
ADDC A, @Ri	Add indirect RAM to A with carry	1	2
ADDC A, #data	Add immediate to A with carry	2	2
SUBB A, Rn	Subtract register from A with borrow	1	1
SUBB A, direct	Subtract direct byte from A with borrow	2	2
SUBB A, @Ri	Subtract indirect RAM from A with borrow	1	2
SUBB A, #data	Subtract immediate from A with borrow	2	2
INC A	Increment A	1	1
INC Rn	Increment register	1	1
INC direct	Increment direct byte	2	2
INC @Ri	Increment indirect RAM	1	2
DEC A	Decrement A	1	1
DEC Rn	Decrement register	1	1
DEC direct	Decrement direct byte	2	2
DEC @Ri	Decrement indirect RAM	1	2
INC DPTR	Increment Data Pointer	1	1
MUL AB	Multiply A and B	1	4
DIV AB	Divide A by B	1	8
DA A	Decimal adjust A	1	1
Logical Operations			
ANL A, Rn	AND Register to A	1	1
ANL A, direct	AND direct byte to A	2	2
ANL A, @Ri	AND indirect RAM to A	1	2
ANL A, #data	AND immediate to A	2	2
ANL direct, A	AND A to direct byte	2	2
ANL direct, #data	AND immediate to direct byte	3	3
ORL A, Rn	OR Register to A	1	1
ORL A, direct	OR direct byte to A	2	2
ORL A, @Ri	OR indirect RAM to A	1	2
ORL A, #data	OR immediate to A	2	2
ORL direct, A	OR A to direct byte	2	2
ORL direct, #data	OR immediate to direct byte	3	3
XRL A, Rn	Exclusive-OR Register to A	1	1
XRL A, direct	Exclusive-OR direct byte to A	2	2
XRL A, @Ri	Exclusive-OR indirect RAM to A	1	2
XRL A, #data	Exclusive-OR immediate to A	2	2
XRL direct, A	Exclusive-OR A to direct byte	2	2
XRL direct, #data	Exclusive-OR immediate to direct byte	3	3

Table 8.1. CIP-51 Instruction Set Summary (Continued)

Mnemonic	Description	Bytes	Clock Cycles
CLR A	Clear A	1	1
CPL A	Complement A	1	1
RL A	Rotate A left	1	1
RLC A	Rotate A left through Carry	1	1
RR A	Rotate A right	1	1
RRC A	Rotate A right through Carry	1	1
SWAP A	Swap nibbles of A	1	1
Data Transfer			
MOV A, Rn	Move Register to A	1	1
MOV A, direct	Move direct byte to A	2	2
MOV A, @Ri	Move indirect RAM to A	1	2
MOV A, #data	Move immediate to A	2	2
MOV Rn, A	Move A to Register	1	1
MOV Rn, direct	Move direct byte to Register	2	2
MOV Rn, #data	Move immediate to Register	2	2
MOV direct, A	Move A to direct byte	2	2
MOV direct, Rn	Move Register to direct byte	2	2
MOV direct, direct	Move direct byte to direct byte	3	3
MOV direct, @Ri	Move indirect RAM to direct byte	2	2
MOV direct, #data	Move immediate to direct byte	3	3
MOV @Ri, A	Move A to indirect RAM	1	2
MOV @Ri, direct	Move direct byte to indirect RAM	2	2
MOV @Ri, #data	Move immediate to indirect RAM	2	2
MOV DPTR, #data16	Load DPTR with 16-bit constant	3	3
MOVC A, @A+DPTR	Move code byte relative DPTR to A	1	3
MOVC A, @A+PC	Move code byte relative PC to A	1	3
MOVX A, @Ri	Move external data (8-bit address) to A	1	3
MOVX @Ri, A	Move A to external data (8-bit address)	1	3
MOVX A, @DPTR	Move external data (16-bit address) to A	1	3
MOVX @DPTR, A	Move A to external data (16-bit address)	1	3
PUSH direct	Push direct byte onto stack	2	2
POP direct	Pop direct byte from stack	2	2
XCH A, Rn	Exchange Register with A	1	1
XCH A, direct	Exchange direct byte with A	2	2
XCH A, @Ri	Exchange indirect RAM with A	1	2
XCHD A, @Ri	Exchange low nibble of indirect RAM with A	1	2
Boolean Manipulation			
CLR C	Clear Carry	1	1
CLR bit	Clear direct bit	2	2
SETB C	Set Carry	1	1
SETB bit	Set direct bit	2	2
CPL C	Complement Carry	1	1
CPL bit	Complement direct bit	2	2
ANL C, bit	AND direct bit to Carry	2	2

Table 8.1. CIP-51 Instruction Set Summary (Continued)

Mnemonic	Description	Bytes	Clock Cycles
ANL C, /bit	AND complement of direct bit to Carry	2	2
ORL C, bit	OR direct bit to carry	2	2
ORL C, /bit	OR complement of direct bit to Carry	2	2
MOV C, bit	Move direct bit to Carry	2	2
MOV bit, C	Move Carry to direct bit	2	2
JC rel	Jump if Carry is set	2	2/3
JNC rel	Jump if Carry is not set	2	2/3
JB bit, rel	Jump if direct bit is set	3	3/4
JNB bit, rel	Jump if direct bit is not set	3	3/4
JBC bit, rel	Jump if direct bit is set and clear bit	3	3/4
Program Branching			
ACALL addr11	Absolute subroutine call	2	3
LCALL addr16	Long subroutine call	3	4
RET	Return from subroutine	1	5
RETI	Return from interrupt	1	5
AJMP addr11	Absolute jump	2	3
LJMP addr16	Long jump	3	4
SJMP rel	Short jump (relative address)	2	3
JMP @A+DPTR	Jump indirect relative to DPTR	1	3
JZ rel	Jump if A equals zero	2	2/3
JNZ rel	Jump if A does not equal zero	2	2/3
CJNE A, direct, rel	Compare direct byte to A and jump if not equal	3	3/4
CJNE A, #data, rel	Compare immediate to A and jump if not equal	3	3/4
CJNE Rn, #data, rel	Compare immediate to Register and jump if not equal	3	3/4
CJNE @Ri, #data, rel	Compare immediate to indirect and jump if not equal	3	4/5
DJNZ Rn, rel	Decrement Register and jump if not zero	2	2/3
DJNZ direct, rel	Decrement direct byte and jump if not zero	3	3/4
NOP	No operation	1	1

Notes on Registers, Operands and Addressing Modes:
Rn—Register R0–R7 of the currently selected register bank. **@Ri**—Data RAM location addressed indirectly through R0 or R1. **rel**—8-bit, signed (twos complement) offset relative to the first byte of the following instruction. Used by SJMP and all conditional jumps. **direct**—8-bit internal data location's address. This could be a direct-access Data RAM location (0x00–0x7F) or an SFR (0x80–0xFF). **#data**—8-bit constant **#data16**—16-bit constant **bit**—Direct-accessed bit in Data RAM or SFR **addr11**—11-bit destination address used by ACALL and AJMP. The destination must be within the same 2 kB page of program memory as the first byte of the following instruction. **addr16**—16-bit destination address used by LCALL and LJMP. The destination may be anywhere within the 8 kB program memory space. There is one unused opcode (0xA5) that performs the same function as NOP. All mnemonics copyrighted © Intel Corporation 1980.

8.4. CIP-51 Register Descriptions

Following are descriptions of SFRs related to the operation of the CIP-51 System Controller. Reserved bits should not be set to logic l. Future product versions may use these bits to implement new features in which case the reset value of the bit will be logic 0, selecting the feature's default state. Detailed descriptions of the remaining SFRs are included in the sections of the data sheet associated with their corresponding system function.

SFR Definition 8.1. DPL: Data Pointer Low Byte

Bit	7	6	5	4	3	2	1	0
Name	DPL[7:0]							
Type	R/W							
Reset	0	0	0	0	0	0	0	0

SFR Page = All Pages; SFR Address = 0x82

Bit	Name	Function
7:0	DPL[7:0]	**Data Pointer Low.** The DPL register is the low byte of the 16-bit DPTR. DPTR is used to access indirectly addressed Flash memory or XRAM.

SFR Definition 8.2. DPH: Data Pointer High Byte

Bit	7	6	5	4	3	2	1	0
Name	DPH[7:0]							
Type	R/W							
Reset	0	0	0	0	0	0	0	0

SFR Page = All Pages; SFR Address = 0x83

Bit	Name	Function
7:0	DPH[7:0]	**Data Pointer High.** The DPH register is the high byte of the 16-bit DPTR. DPTR is used to access indirectly addressed Flash memory or XRAM.

SFR Definition 8.3. SP: Stack Pointer

Bit	7	6	5	4	3	2	1	0
Name	SP[7:0]							
Type	R/W							
Reset	0	0	0	0	0	1	1	1

SFR Page = All Pages; SFR Address = 0x81

Bit	Name	Function
7:0	SP[7:0]	**Stack Pointer.** The Stack Pointer holds the location of the top of the stack. The stack pointer is incremented before every PUSH operation. The SP register defaults to 0x07 after reset.

SFR Definition 8.4. ACC: Accumulator

Bit	7	6	5	4	3	2	1	0
Name	ACC[7:0]							
Type	R/W							
Reset	0	0	0	0	0	0	0	0

SFR Page = All Pages; SFR Address = 0xE0; Bit-Addressable

Bit	Name	Function
7:0	ACC[7:0]	**Accumulator.** This register is the accumulator for arithmetic operations.

SFR Definition 8.5. B: B Register

Bit	7	6	5	4	3	2	1	0
Name	B[7:0]							
Type	R/W							
Reset	0	0	0	0	0	0	0	0

SFR Page = All Pages; SFR Address = 0xF0; Bit-Addressable

Bit	Name	Function
7:0	B[7:0]	**B Register.** This register serves as a second accumulator for certain arithmetic operations.

SFR Definition 8.6. PSW: Program Status Word

Bit	7	6	5	4	3	2	1	0
Name	CY	AC	F0	RS[1:0]		OV	F1	PARITY
Type	R/W	R/W	R/W	R/W		R/W	R/W	R
Reset	0	0	0	0	0	0	0	0

SFR Page = All Pages; SFR Address = 0xD0; Bit-Addressable

Bit	Name	Function
7	CY	**Carry Flag.** This bit is set when the last arithmetic operation resulted in a carry (addition) or a borrow (subtraction). It is cleared to logic 0 by all other arithmetic operations.
6	AC	**Auxiliary Carry Flag.** This bit is set when the last arithmetic operation resulted in a carry into (addition) or a borrow from (subtraction) the high order nibble. It is cleared to logic 0 by all other arithmetic operations.
5	F0	**User Flag 0.** This is a bit-addressable, general purpose flag for use under software control.
4:3	RS[1:0]	**Register Bank Select.** These bits select which register bank is used during register accesses. 00: Bank 0, Addresses 0x00-0x07 01: Bank 1, Addresses 0x08-0x0F 10: Bank 2, Addresses 0x10-0x17 11: Bank 3, Addresses 0x18-0x1F
2	OV	**Overflow Flag.** This bit is set to 1 under the following circumstances: • An ADD, ADDC, or SUBB instruction causes a sign-change overflow. • A MUL instruction results in an overflow (result is greater than 255). • A DIV instruction causes a divide-by-zero condition. The OV bit is cleared to 0 by the ADD, ADDC, SUBB, MUL, and DIV instructions in all other cases.
1	F1	**User Flag 1.** This is a bit-addressable, general purpose flag for use under software control.
0	PARITY	**Parity Flag.** This bit is set to logic 1 if the sum of the eight bits in the accumulator is odd and cleared if the sum is even.

9. Memory Organization

The memory organization of the CIP-51 System Controller is similar to that of a standard 8051. There are two separate memory spaces: program memory and data memory. Program and data memory share the same address space but are accessed via different instruction types. The memory organization of the C8051F91x-C8051F90x device family is shown in Figure 9.1

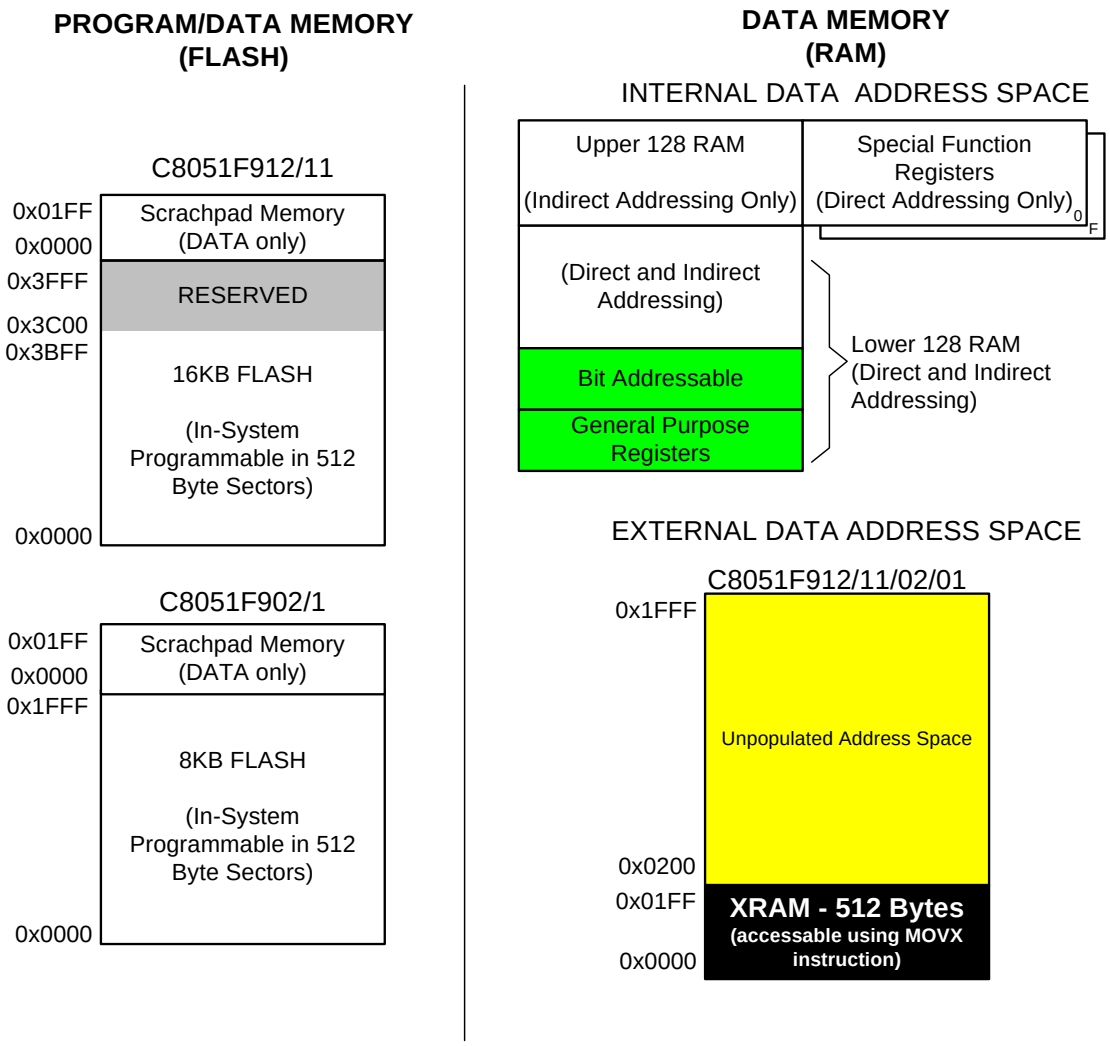

Note: Code compatible devices with up to 64 kB Flash and 4 kB RAM are available as the C8051F93x-92x family.

Figure 9.1. C8051F91x-C8051F90x Memory Map

9.1. Program Memory

The CIP-51 core has a 64 kB program memory space. The C8051F91x-C8051F90x devices implement 16 kB (C8051F912/1) or 8 kB (C8051F902/1) of this program memory space as in-system, re-programmable Flash memory, organized in a contiguous block from addresses 0x0000 to 0x3BFF (C8051F912/1) or 0x1FFF (C8051F902/1). The last byte of this contiguous block of addresses serves as the security lock byte for the device. Any addresses above the lock byte are reserved.

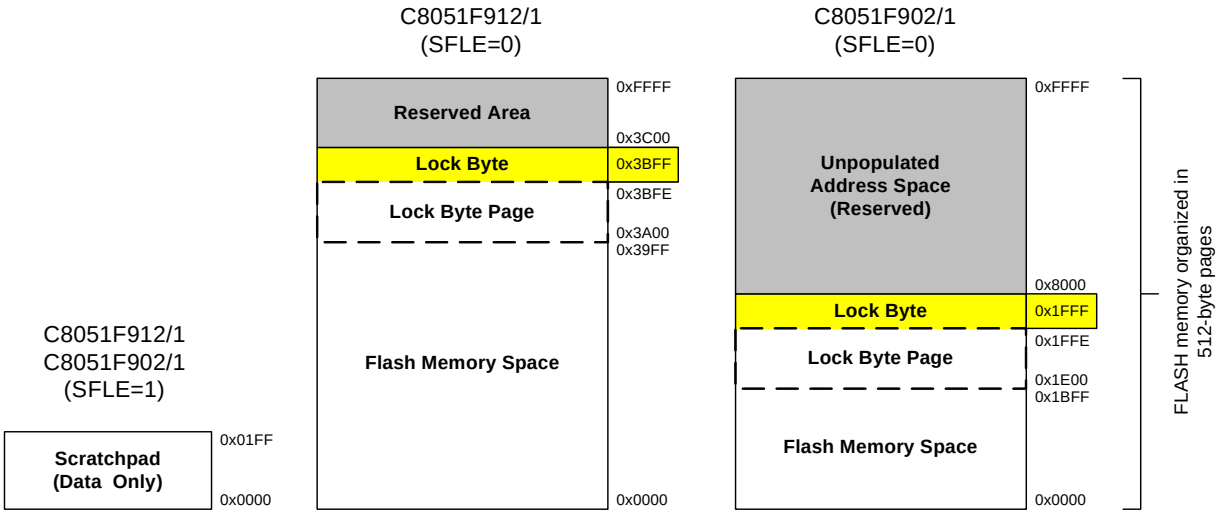

Figure 9.2. Flash Program Memory Map

9.1.1. MOVX Instruction and Program Memory

The MOVX instruction in an 8051 device is typically used to access external data memory. On the C8051F91x-C8051F90x devices, the MOVX instruction is normally used to read and write on-chip XRAM, but can be re-configured to write and erase on-chip Flash memory space. MOVC instructions are always used to read Flash memory, while MOVX write instructions are used to erase and write Flash. This Flash access feature provides a mechanism for the C8051F91x-C8051F90x to update program code and use the program memory space for non-volatile data storage. Refer to Section “13. Flash Memory” on page 138 for further details.

9.2. Data Memory

The C8051F91x-C8051F90x device family include 768 bytes of RAM data memory. 256 bytes of this memory is mapped into the internal RAM space of the 8051. The remainder of this memory is on-chip “external” memory. The data memory map is shown in Figure 9.1 for reference.

9.2.1. Internal RAM

There are 256 bytes of internal RAM mapped into the data memory space from 0x00 through 0xFF. The lower 128 bytes of data memory are used for general purpose registers and scratch pad memory. Either direct or indirect addressing may be used to access the lower 128 bytes of data memory. Locations 0x00 through 0x1F are addressable as four banks of general purpose registers, each bank consisting of eight byte-wide registers. The next 16 bytes, locations 0x20 through 0x2F, may either be addressed as bytes or as 128 bit locations accessible with the direct addressing mode.

The upper 128 bytes of data memory are accessible only by indirect addressing. This region occupies the same address space as the Special Function Registers (SFR) but is physically separate from the SFR space. The addressing mode used by an instruction when accessing locations above 0x7F determines

whether the CPU accesses the upper 128 bytes of data memory space or the SFRs. Instructions that use direct addressing will access the SFR space. Instructions using indirect addressing above 0x7F access the upper 128 bytes of data memory. Figure 9.1 illustrates the data memory organization of the C8051F91x-C8051F90x.

9.2.1.1. General Purpose Registers

The lower 32 bytes of data memory, locations 0x00 through 0x1F, may be addressed as four banks of general-purpose registers. Each bank consists of eight byte-wide registers designated R0 through R7. Only one of these banks may be enabled at a time. Two bits in the program status word, RS0 (PSW.3) and RS1 (PSW.4), select the active register bank (see description of the PSW in SFR Definition 8.6). This allows fast context switching when entering subroutines and interrupt service routines. Indirect addressing modes use registers R0 and R1 as index registers.

9.2.1.2. Bit Addressable Locations

In addition to direct access to data memory organized as bytes, the sixteen data memory locations at 0x20 through 0x2F are also accessible as 128 individually addressable bits. Each bit has a bit address from 0x00 to 0x7F. Bit 0 of the byte at 0x20 has bit address 0x00 while bit7 of the byte at 0x20 has bit address 0x07. Bit 7 of the byte at 0x2F has bit address 0x7F. A bit access is distinguished from a full byte access by the type of instruction used (bit source or destination operands as opposed to a byte source or destination).

The MCS-51™ assembly language allows an alternate notation for bit addressing of the form XX.B where XX is the byte address and B is the bit position within the byte. For example, the instruction:

```
MOV    C, 22.3h
```

moves the Boolean value at 0x13 (bit 3 of the byte at location 0x22) into the Carry flag.

9.2.1.3. Stack

A programmer's stack can be located anywhere in the 256-byte data memory. The stack area is designated using the Stack Pointer (SP) SFR. The SP will point to the last location used. The next value pushed on the stack is placed at SP+1 and then SP is incremented. A reset initializes the stack pointer to location 0x07. Therefore, the first value pushed on the stack is placed at location 0x08, which is also the first register (R0) of register bank 1. Thus, if more than one register bank is to be used, the SP should be initialized to a location in the data memory not being used for data storage. The stack depth can extend up to 256 bytes.

9.2.2. External RAM

There are 512 bytes of on-chip RAM mapped into the external data memory space. All of these address locations may be accessed using the external move instruction (MOVX) and the data pointer (DPTR), or using MOVX indirect addressing mode (such as @R1) in combination with the EMI0CN register.

10. On-Chip XRAM

The C8051F91x-C8051F90x MCUs include on-chip RAM mapped into the external data memory space (XRAM). The external memory space may be accessed using the external move instruction (MOVX) with the target address specified in either the data pointer (DPTR), or with the target address low byte in R0 or R1 and the target address high byte in the External Memory Interface Control Register (EMI0CN, shown in SFR Definition 10.1).

When using the MOVX instruction to access on-chip RAM, no additional initialization is required and the MOVX instruction execution time is as specified in the CIP-51 chapter.

Important Note: MOVX write operations can be configured to target Flash memory, instead of XRAM. See Section “13. Flash Memory” on page 138 for more details. The MOVX instruction accesses XRAM by default.

10.1. Accessing XRAM

The XRAM memory space is accessed using the MOVX instruction. The MOVX instruction has two forms, both of which use an indirect addressing method. The first method uses the Data Pointer, DPTR, a 16-bit register which contains the effective address of the XRAM location to be read from or written to. The second method uses R0 or R1 in combination with the EMI0CN register to generate the effective XRAM address. Examples of both of these methods are given below.

10.1.1. 16-Bit MOVX Example

The 16-bit form of the MOVX instruction accesses the memory location pointed to by the contents of the DPTR register. The following series of instructions reads the value of the byte at address 0x1234 into the accumulator A:

```
MOV    DPTR, #1234h        ; load DPTR with 16-bit address to read (0x1234)
MOVX   A, @DPTR            ; load contents of 0x1234 into accumulator A
```

The above example uses the 16-bit immediate MOV instruction to set the contents of DPTR. Alternately, the DPTR can be accessed through the SFR registers DPH, which contains the upper 8-bits of DPTR, and DPL, which contains the lower 8-bits of DPTR.

10.1.2. 8-Bit MOVX Example

The 8-bit form of the MOVX instruction uses the contents of the EMI0CN SFR to determine the upper 8-bits of the effective address to be accessed and the contents of R0 or R1 to determine the lower 8-bits of the effective address to be accessed. The following series of instructions read the contents of the byte at address 0x1234 into the accumulator A.

```
MOV    EMI0CN, #12h        ; load high byte of address into EMI0CN
MOV    R0, #34h            ; load low byte of address into R0 (or R1)
MOVX   a, @R0              ; load contents of 0x1234 into accumulator A
```

10.2. Special Function Registers

The special function register used for configuring XRAM access is EMI0CN.

SFR Definition 10.1. EMI0CN: External Memory Interface Control

Bit	7	6	5	4	3	2	1	0
Name								PGSEL
Type	R/W	R/W	R/W	R/W	R/W	R/W	R/W	R/W
Reset	0	0	0	0	0	0	0	0

SFR Page = 0x0; SFR Address = 0xAA

Bit	Name	Function
7:1	Unused	**Unused.** Read = 0000000b; Write = Don't Care
0	PGSEL	**XRAM Page Select.** The EMI0CN register provides the high byte of the 16-bit external data memory address when using an 8-bit MOVX command, effectively selecting a 256-byte page of RAM. Since the upper (unused) bits of the register are always zero, the PGSEL determines which page of XRAM is accessed. For Example: If EMI0CN = 0x01, addresses 0x0100 through 0x01FF will be accessed. If EMI0CN = 0x00, addresses 0x0000 through 0x00FF will be accessed.

11. Special Function Registers

The direct-access data memory locations from 0x80 to 0xFF constitute the special function registers (SFRs). The SFRs provide control and data exchange with the C8051F91x-C8051F90x's resources and peripherals. The CIP-51 controller core duplicates the SFRs found in a typical 8051 implementation as well as implementing additional SFRs used to configure and access the sub-systems unique to the C8051F91x-C8051F90x. This allows the addition of new functionality while retaining compatibility with the MCS-51™ instruction set. Table 11.1 and Table 11.2 list the SFRs implemented in the C8051F91x-C8051F90x device family.

The SFR registers are accessed anytime the direct addressing mode is used to access memory locations from 0x80 to 0xFF. SFRs with addresses ending in 0x0 or 0x8 (e.g., P0, TCON, SCON0, IE, etc.) are bit-addressable as well as byte-addressable. All other SFRs are byte-addressable only. Unoccupied addresses in the SFR space are reserved for future use. Accessing these areas will have an indeterminate effect and should be avoided. Refer to the corresponding pages of the data sheet, as indicated in Table 11.3, for a detailed description of each register.

Table 11.1. Special Function Register (SFR) Memory Map (Page 0x0)

F8	SPI0CN	PCA0L	PCA0H	PCA0CPL0	PCA0CPH0	PCA0CPL4	PCA0CPH4	VDM0CN
F0	B	P0MDIN	P1MDIN		SMB0ADR	SMB0ADM	EIP1	EIP2
E8	ADC0CN	PCA0CPL1	PCA0CPH1	PCA0CPL2	PCA0CPH2	PCA0CPL3	PCA0CPH3	RSTSRC
E0	ACC	XBR0	XBR1	XBR2	IT01CF	FLWR	EIE1	EIE2
D8	PCA0CN	PCA0MD	PCA0CPM0	PCA0CPM1	PCA0CPM2	PCA0CPM3	PCA0CPM4	PCA0PWM
D0	PSW	REF0CN	PCA0CPL5	PCA0CPH5	P0SKIP	P1SKIP		P0MAT
C8	TMR2CN	REG0CN	TMR2RLL	TMR2RLH	TMR2L	TMR2H	PCA0CPM5	P1MAT
C0	SMB0CN	SMB0CF	SMB0DAT	ADC0GTL	ADC0GTH	ADC0LTL	ADC0LTH	P0MASK
B8	IP	IREF0CN	ADC0AC	ADC0MX	ADC0CF	ADC0L	ADC0H	P1MASK
B0	SPI1CN	OSCXCN	OSCICN	OSCICL		PMU0CF	FLSCL	FLKEY
A8	IE	CLKSEL	EMI0CN		RTC0ADR	RTC0DAT	RTC0KEY	
A0	P2	SPI0CFG	SPI0CKR	SPI0DAT	P0MDOUT	P1MDOUT	P2MDOUT	SFRPAGE
98	SCON0	SBUF0	CPT1CN	CPT0CN	CPT1MD	CPT0MD	CPT1MX	CPT0MX
90	P1	TMR3CN	TMR3RLL	TMR3RLH	TMR3L	TMR3H	DC0CF	DC0CN
88	TCON	TMOD	TL0	TL1	TH0	TH1	CKCON	PSCTL
80	P0	SP	DPL	DPH	SPI1CFG	SPI1CKR	SPI1DAT	PCON
	0(8)	1(9)	2(A)	3(B)	4(C)	5(D)	6(E)	7(F)

(bit addressable)

11.1. SFR Paging

To accommodate more than 128 SFRs in the 0x80 to 0xFF address space, SFR paging has been implemented. By default, all SFR accesses target SFR Page 0x0 to allow access to the registers listed in Table 11.1. During device initialization, some SFRs located on SFR Page 0xF may need to be accessed. Table 11.2 lists the SFRs accessible from SFR Page 0x0F. Some SFRs are accessible from both pages, including the SFRPAGE register. SFRs only accessible from Page 0xF are in **bold**. SFRs only available on the ‘F912 and ‘F902 devices are in **blue**.

The following procedure should be used when accessing SFRs on Page 0xF:

1. Save the current interrupt state (EA_save = EA).
2. Disable Interrupts (EA = 0).
3. Set SFRPAGE = 0xF.
4. Access the SFRs located on SFR Page 0xF.
5. Set SFRPAGE = 0x0.
6. Restore interrupt state (EA = EA_save).

Table 11.2. Special Function Register (SFR) Memory Map (Page 0xF)

F8								
F0	B						EIP1	EIP2
E8								
E0	ACC					FLWR	EIE1	EIE2
D8								
D0	PSW							
C8								
C0								
B8		**IREF0CF**	**ADC0PWR**			**ADC0TK**		
B0						**PMU0MD**		
A8	IE	CLKSEL						
A0	P2				**P0DRV**	**P1DRV**	**P2DRV**	SFRPAGE
98								
90	P1	**CRC0DAT**	**CRC0CN**	**CRC0IN**	**DC0MD**	**CRC0FLIP**	**CRC0AUTO**	**CRC0CNT**
88								
80	P0	SP	DPL	DPH		**TOFFL**	**TOFFH**	PCON
	0(8)	1(9)	2(A)	3(B)	4(C)	5(D)	6(E)	7(F)

(bit addressable)

SFR Definition 11.1. SFR Page: SFR Page

Bit	7	6	5	4	3	2	1	0
Name	SFRPAGE[7:0]							
Type	R/W							
Reset	0	0	0	0	0	0	0	0

SFR Page = All Pages; SFR Address = 0xA7

Bit	Name	Function
7:0	SFRPAGE[7:0]	**SFR Page.** Specifies the SFR Page used when reading, writing, or modifying special function registers.

Table 11.3. Special Function Registers

SFRs are listed in alphabetical order. All undefined SFR locations are reserved. SFRs highlighted in **blue** are only available on ‘F912 and ‘F902 devices.

Register	Address	SFR Page	Description	Page
ACC	0xE0	All	Accumulator	110
ADC0AC	0xBA	0x0	ADC0 Accumulator Configuration	75
ADC0CF	0xBC	0x0	ADC0 Configuration	74
ADC0CN	0xE8	0x0	ADC0 Control	73
ADC0GTH	0xC4	0x0	ADC0 Greater-Than Compare High	79
ADC0GTL	0xC3	0x0	ADC0 Greater-Than Compare Low	79
ADC0H	0xBE	0x0	ADC0 High	78
ADC0L	0xBD	0x0	ADC0 Low	78
ADC0LTH	0xC6	0x0	ADC0 Less-Than Compare Word High	80
ADC0LTL	0xC5	0x0	ADC0 Less-Than Compare Word Low	80
ADC0MX	0xBB	0x0	AMUX0 Channel Select	83
ADC0PWR	0xBA	0xF	ADC0 Burst Mode Power-Up Time	76
ADC0TK	0xBD	0xF	ADC0 Tracking Control	77
B	0xF0	All	B Register	110
CKCON	0x8E	0x0	Clock Control	280
CLKSEL	0xA9	All	Clock Select	192
CPT0CN	0x9B	0x0	Comparator0 Control	97
CPT0MD	0x9D	0x0	Comparator0 Mode Selection	97
CPT0MX	0x9F	0x0	Comparator0 Mux Selection	101
CPT1CN	0x9A	0x0	Comparator1 Control	98

Table 11.3. Special Function Registers (Continued)

SFRs are listed in alphabetical order. All undefined SFR locations are reserved. SFRs highlighted in **blue** are only available on ‘F912 and ‘F902 devices.

Register	Address	SFR Page	Description	Page
CPT1MD	0x9C	0x0	Comparator1 Mode Selection	99
CPT1MX	0x9E	0x0	Comparator1 Mux Selection	102
CRC0AUTO	0x96	0xF	CRC0 Automatic Control	163
CRC0CN	0x92	0xF	CRC0 Control	161
CRC0CNT	0x97	0xF	CRC0 Automatic Flash Sector Count	164
CRC0DAT	0x91	0xF	CRC0 Data	162
CRC0FLIP	0x95	0xF	CRC0 Flip	165
CRC0IN	0x93	0xF	CRC0 Input	162
DC0CF	0x96	0x0	DC0 (DC-DC Converter) Configuration	174
DC0CN	0x97	0x0	DC0 (DC-DC Converter) Control	173
DC0MD	0x94	0xF	**DC0 (DC-DC Converter) Mode**	175
DPH	0x83	All	Data Pointer High	109
DPL	0x82	All	Data Pointer Low	109
EIE1	0xE6	All	Extended Interrupt Enable 1	132
EIE2	0xE7	All	Extended Interrupt Enable 2	134
EIP1	0xF6	0x0	Extended Interrupt Priority 1	133
EIP2	0xF7	0x0	Extended Interrupt Priority 2	135
EMI0CN	0xAA	0x0	EMIF Control	117
FLKEY	0xB7	0x0	Flash Lock And Key	147
FLSCL	0xB6	0x0	Flash Scale	147
IE	0xA8	All	Interrupt Enable	130
IP	0xB8	0x0	Interrupt Priority	131
IREF0CN	0xB9	0x0	Current Reference IREF Control	91
IREF0CF	0xB9	0xF	**Current Reference IREF Configuration**	92
IT01CF	0xE4	0x0	$\overline{\text{INT0}}$/$\overline{\text{INT1}}$ Configuration	137
OSCICL	0xB3	0x0	Internal Oscillator Calibration	193
OSCICN	0xB2	0x0	Internal Oscillator Control	193
OSCXCN	0xB1	0x0	External Oscillator Control	194
P0	0x80	All	Port 0 Latch	227
P0DRV	0xA4	0xF	Port 0 Drive Strength	229
P0MASK	0xC7	0x0	Port 0 Mask	224
P0MAT	0xD7	0x0	Port 0 Match	224
P0MDIN	0xF1	0x0	Port 0 Input Mode Configuration	228

Table 11.3. Special Function Registers (Continued)

SFRs are listed in alphabetical order. All undefined SFR locations are reserved. SFRs highlighted in **blue** are only available on ‘F912 and ‘F902 devices.

Register	Address	SFR Page	Description	Page
P0MDOUT	0xA4	0x0	Port 0 Output Mode Configuration	228
P0SKIP	0xD4	0x0	Port 0 Skip	227
P1	0x90	All	Port 1 Latch	230
P1DRV	0xA5	0xF	Port 1 Drive Strength	232
P1MASK	0xBF	0x0	Port 1 Mask	225
P1MAT	0xCF	0x0	Port 1 Match	225
P1MDIN	0xF2	0x0	Port 1 Input Mode Configuration	231
P1MDOUT	0xA5	0x0	Port 1 Output Mode Configuration	231
P1SKIP	0xD5	0x0	Port 1 Skip	230
P2	0xA0	All	Port 2 Latch	232
P2DRV	0xA6	0xF	Port 2 Drive Strength	233
P2MDOUT	0xA6	0x0	Port 2 Output Mode Configuration	233
PCA0CN	0xD8	0x0	PCA0 Control	315
PCA0CPH0	0xFC	0x0	PCA0 Capture 0 High	320
PCA0CPH1	0xEA	0x0	PCA0 Capture 1 High	320
PCA0CPH2	0xEC	0x0	PCA0 Capture 2 High	320
PCA0CPH3	0xEE	0x0	PCA0 Capture 3 High	320
PCA0CPH4	0xFE	0x0	PCA0 Capture 4 High	320
PCA0CPH5	0xD3	0x0	PCA0 Capture 5 High	320
PCA0CPL0	0xFB	0x0	PCA0 Capture 0 Low	320
PCA0CPL1	0xE9	0x0	PCA0 Capture 1 Low	320
PCA0CPL2	0xEB	0x0	PCA0 Capture 2 Low	320
PCA0CPL3	0xED	0x0	PCA0 Capture 3 Low	320
PCA0CPL4	0xFD	0x0	PCA0 Capture 4 Low	320
PCA0CPL5	0xD2	0x0	PCA0 Capture 5 Low	320
PCA0CPM0	0xDA	0x0	PCA0 Module 0 Mode Register	318
PCA0CPM1	0xDB	0x0	PCA0 Module 1 Mode Register	318
PCA0CPM2	0xDC	0x0	PCA0 Module 2 Mode Register	318
PCA0CPM3	0xDD	0x0	PCA0 Module 3 Mode Register	318
PCA0CPM4	0xDE	0x0	PCA0 Module 4 Mode Register	318
PCA0CPM5	0xCE	0x0	PCA0 Module 5 Mode Register	318
PCA0H	0xFA	0x0	PCA0 Counter High	319
PCA0L	0xF9	0x0	PCA0 Counter Low	319

Table 11.3. Special Function Registers (Continued)

SFRs are listed in alphabetical order. All undefined SFR locations are reserved. SFRs highlighted in **blue** are only available on ‘F912 and ‘F902 devices.

Register	Address	SFR Page	Description	Page
PCA0MD	0xD9	0x0	PCA0 Mode	316
PCA0PWM	0xDF	0x0	PCA0 PWM Configuration	317
PCON	0x87	0x0	Power Control	157
PMU0CF	0xB5	0x0	PMU0 Configuration	155
PMU0MD	0xB5	0xF	**PMU0 Mode**	156
PSCTL	0x8F	0x0	Program Store R/W Control	146
PSW	0xD0	All	Program Status Word	111
REF0CN	0xD1	0x0	Voltage Reference Control	89
REG0CN	0xC9	0x0	Voltage Regulator (VREG0) Control	177
RSTSRC	0xEF	0x0	Reset Source Configuration/Status	185
RTC0ADR	0xAC	0x0	RTC0 Address	200
RTC0DAT	0xAD	0x0	RTC0 Data	200
RTC0KEY	0xAE	0x0	RTC0 Key	199
SBUF0	0x99	0x0	UART0 Data Buffer	262
SCON0	0x98	0x0	UART0 Control	261
SFRPAGE	0xA7	All	SFR Page	121
SMB0ADM	0xF5	0x0	SMBus Slave Address Mask	246
SMB0ADR	0xF4	0x0	SMBus Slave Address	246
SMB0CF	0xC1	0x0	SMBus Configuration	241
SMB0CN	0xC0	0x0	SMBus Control	243
SMB0DAT	0xC2	0x0	SMBus Data	247
SP	0x81	All	Stack Pointer	110
SPI0CFG	0xA1	0x0	SPI0 Configuration	272
SPI0CKR	0xA2	0x0	SPI0 Clock Rate Control	274
SPI0CN	0xF8	0x0	SPI0 Control	273
SPI0DAT	0xA3	0x0	SPI0 Data	275
SPI1CFG	0x84	0x0	SPI1 Configuration	272
SPI1CKR	0x85	0x0	SPI1 Clock Rate Control	274
SPI1CN	0xB0	0x0	SPI1 Control	273
SPI1DAT	0x86	0x0	SPI1 Data	275
TCON	0x88	0x0	Timer/Counter Control	285
TH0	0x8C	0x0	Timer/Counter 0 High	288
TH1	0x8D	0x0	Timer/Counter 1 High	288

Table 11.3. Special Function Registers (Continued)

SFRs are listed in alphabetical order. All undefined SFR locations are reserved. SFRs highlighted in **blue** are only available on ‘F912 and ‘F902 devices.

Register	Address	SFR Page	Description	Page
TL0	0x8A	0x0	Timer/Counter 0 Low	287
TL1	0x8B	0x0	Timer/Counter 1 Low	287
TMOD	0x89	0x0	Timer/Counter Mode	286
TMR2CN	0xC8	0x0	Timer/Counter 2 Control	292
TMR2H	0xCD	0x0	Timer/Counter 2 High	294
TMR2L	0xCC	0x0	Timer/Counter 2 Low	294
TMR2RLH	0xCB	0x0	Timer/Counter 2 Reload High	293
TMR2RLL	0xCA	0x0	Timer/Counter 2 Reload Low	293
TMR3CN	0x91	0x0	Timer/Counter 3 Control	298
TMR3H	0x95	0x0	Timer/Counter 3 High	300
TMR3L	0x94	0x0	Timer/Counter 3 Low	300
TMR3RLH	0x93	0x0	Timer/Counter 3 Reload High	299
TMR3RLL	0x92	0x0	Timer/Counter 3 Reload Low	299
TOFFH	0x86	0xF	Temperature Offset High	86
TOFFL	0x85	0xF	Temperature Offset Low	86
VDM0CN	0xFF	0x0	VDD Monitor Control	182
XBR0	0xE1	0x0	Port I/O Crossbar Control 0	221
XBR1	0xE2	0x0	Port I/O Crossbar Control 1	222
XBR2	0xE3	0x0	Port I/O Crossbar Control 2	223

12. Interrupt Handler

The C8051F91x-C8051F90x microcontroller family includes an extended interrupt system supporting multiple interrupt sources and two priority levels. The allocation of interrupt sources between on-chip peripherals and external input pins varies according to the specific version of the device. Refer to Table 12.1, “Interrupt Summary,” on page 128 for a detailed listing of all interrupt sources supported by the device. Refer to the data sheet section associated with a particular on-chip peripheral for information regarding valid interrupt conditions for the peripheral and the behavior of its interrupt-pending flag(s).

Each interrupt source has one or more associated interrupt-pending flag(s) located in an SFR or an indirect register. When a peripheral or external source meets a valid interrupt condition, the associated interrupt-pending flag is set to logic 1. If both global interrupts and the specific interrupt source is enabled, a CPU interrupt request is generated when the interrupt-pending flag is set.

As soon as execution of the current instruction is complete, the CPU generates an LCALL to a predetermined address to begin execution of an interrupt service routine (ISR). Each ISR must end with an RETI instruction, which returns program execution to the next instruction that would have been executed if the interrupt request had not occurred. If interrupts are not enabled, the interrupt-pending flag is ignored by the hardware and program execution continues as normal. (The interrupt-pending flag is set to logic 1 regardless of the interrupt's enable/disable state.)

Some interrupt-pending flags are automatically cleared by hardware when the CPU vectors to the ISR. However, most are not cleared by the hardware and must be cleared by software before returning from the ISR. If an interrupt-pending flag remains set after the CPU completes the return-from-interrupt (RETI) instruction, a new interrupt request will be generated immediately and the CPU will re-enter the ISR after the completion of the next instruction.

12.1. Enabling Interrupt Sources

Each interrupt source can be individually enabled or disabled through the use of an associated interrupt enable bit in the Interrupt Enable and Extended Interrupt Enable SFRs. However, interrupts must first be globally enabled by setting the EA bit (IE.7) to logic 1 before the individual interrupt enables are recognized. Setting the EA bit to logic 0 disables all interrupt sources regardless of the individual interrupt-enable settings. Note that interrupts which occur when the EA bit is set to logic 0 will be held in a pending state, and will not be serviced until the EA bit is set back to logic 1.

12.2. MCU Interrupt Sources and Vectors

The CPU services interrupts by generating an LCALL to a predetermined address (the interrupt vector address) to begin execution of an interrupt service routine (ISR). The interrupt vector addresses associated with each interrupt source are listed in Table 12.1 on page 128. Software should ensure that the interrupt vector for each enabled interrupt source contains a valid interrupt service routine.

Software can simulate an interrupt by setting any interrupt-pending flag to logic 1. If interrupts are enabled for the flag, an interrupt request will be generated and the CPU will vector to the ISR address associated with the interrupt-pending flag.

12.3. Interrupt Priorities

Each interrupt source can be individually programmed to one of two priority levels: low or high. A low priority interrupt service routine can be preempted by a high priority interrupt. A high priority interrupt cannot be preempted. If a high priority interrupt preempts a low priority interrupt, the low priority interrupt will finish execution after the high priority interrupt completes. Each interrupt has an associated interrupt priority bit in in the Interrupt Priority and Extended Interrupt Priority registers used to configure its priority level. Low priority is the default.

If two interrupts are recognized simultaneously, the interrupt with the higher priority is serviced first. If both interrupts have the same priority level, a fixed priority order is used to arbitrate. See Table 12.1 on page 128 to determine the fixed priority order used to arbitrate between simultaneously recognized interrupts.

12.4. Interrupt Latency

Interrupt response time depends on the state of the CPU when the interrupt occurs. Pending interrupts are sampled and priority decoded each system clock cycle. Therefore, the fastest possible response time is 7 system clock cycles: 1 clock cycle to detect the interrupt, 1 clock cycle to execute a single instruction, and 5 clock cycles to complete the LCALL to the ISR. If an interrupt is pending when a RETI is executed, a single instruction is executed before an LCALL is made to service the pending interrupt. Therefore, the maximum response time for an interrupt (when no other interrupt is currently being serviced or the new interrupt is of greater priority) occurs when the CPU is performing an RETI instruction followed by a DIV as the next instruction. In this case, the response time is 19 system clock cycles: 1 clock cycle to detect the interrupt, 5 clock cycles to execute the RETI, 8 clock cycles to complete the DIV instruction and 5 clock cycles to execute the LCALL to the ISR. If the CPU is executing an ISR for an interrupt with equal or higher priority, the new interrupt will not be serviced until the current ISR completes, including the RETI and following instruction.

Table 12.1. Interrupt Summary

Interrupt Source	Interrupt Vector	Priority Order	Pending Flag	Bit addressable?	Cleared by HW?	Enable Flag	Priority Control
Reset	0x0000	Top	None	N/A	N/A	Always Enabled	Always Highest
External Interrupt 0 ($\overline{INT0}$)	0x0003	0	IE0 (TCON.1)	Y	Y	EX0 (IE.0)	PX0 (IP.0)
Timer 0 Overflow	0x000B	1	TF0 (TCON.5)	Y	Y	ET0 (IE.1)	PT0 (IP.1)
External Interrupt 1 ($\overline{INT1}$)	0x0013	2	IE1 (TCON.3)	Y	Y	EX1 (IE.2)	PX1 (IP.2)
Timer 1 Overflow	0x001B	3	TF1 (TCON.7)	Y	Y	ET1 (IE.3)	PT1 (IP.3)
UART0	0x0023	4	RI0 (SCON0.0) TI0 (SCON0.1)	Y	N	ES0 (IE.4)	PS0 (IP.4)
Timer 2 Overflow	0x002B	5	TF2H (TMR2CN.7) TF2L (TMR2CN.6)	Y	N	ET2 (IE.5)	PT2 (IP.5)
SPI0	0x0033	6	SPIF (SPI0CN.7) WCOL (SPI0CN.6) MODF (SPI0CN.5) RXOVRN (SPI0CN.4)	Y	N	ESPI0 (IE.6)	PSPI0 (IP.6)
SMB0	0x003B	7	SI (SMB0CN.0)	Y	N	ESMB0 (EIE1.0)	PSMB0 (EIP1.0)
SmaRTClock Alarm	0x0043	8	ALRM (RTC0CN.2)[2]	N	N	EARTC0 (EIE1.1)	PARTC0 (EIP1.1)
ADC0 Window Comparator	0x004B	9	AD0WINT (ADC0CN.3)	Y	N	EWADC0 (EIE1.2)	PWADC0 (EIP1.2)
ADC0 End of Conversion	0x0053	10	AD0INT (ADC0STA.5)	Y	N	EADC0 (EIE1.3)	PADC0 (EIP1.3)
Programmable Counter Array	0x005B	11	CF (PCA0CN.7) CCFn (PCA0CN.n)	Y	N	EPCA0 (EIE1.4)	PPCA0 (EIP1.4)
Comparator0	0x0063	12	CP0FIF (CPT0CN.4) CP0RIF (CPT0CN.5)	N	N	ECP0 (EIE1.5)	PCP0 (EIP1.5)
Comparator1	0x006B	13	CP1FIF (CPT1CN.4) CP1RIF (CPT1CN.5)	N	N	ECP1 (EIE1.6)	PCP1 (EIP1.6)
Timer 3 Overflow	0x0073	14	TF3H (TMR3CN.7) TF3L (TMR3CN.6)	N	N	ET3 (EIE1.7)	PT3 (EIP1.7)
Supply Monitor Early Warning	0x007B	15	VDDOK (VDM0CN.5)[1] **VBATOK (VDM0CN.4)**[1, 3]			EWARN (EIE2.0)	PWARN (EIP2.0)
Port Match	0x0083	16	None			EMAT (EIE2.1)	PMAT (EIP2.1)
SmaRTClock Oscillator Fail	0x008B	17	OSCFAIL (RTC0CN.5)[2]	N	N	ERTC0F (EIE2.2)	PFRTC0F (EIP2.2)
SPI1	0x0093	18	SPIF (SPI1CN.7) WCOL (SPI1CN.6) MODF (SPI1CN.5) RXOVRN (SPI1CN.4)	N	N	ESPI1 (EIE2.3)	PSPI1 (EIP2.3)

Notes:
1. Indicates a read-only interrupt pending flag. The interrupt enable may be used to prevent software from vectoring to the associated interrupt service routine.
2. Indicates a register located in an indirect memory space.
3. **Blue** text Indicates a bit only available on ‘F912 and ‘F902 devices.

12.5. Interrupt Register Descriptions

The SFRs used to enable the interrupt sources and set their priority level are described in the following register descriptions. Refer to the data sheet section associated with a particular on-chip peripheral for information regarding valid interrupt conditions for the peripheral and the behavior of its interrupt-pending flag(s).

SFR Definition 12.1. IE: Interrupt Enable

Bit	7	6	5	4	3	2	1	0
Name	EA	ESPI0	ET2	ES0	ET1	EX1	ET0	EX0
Type	R/W	R/W	R/W	R/W	R/W	R/W	R/W	R/W
Reset	0	0	0	0	0	0	0	0

SFR Page = All Pages; SFR Address = 0xA8; Bit-Addressable

Bit	Name	Function
7	EA	**Enable All Interrupts.** Globally enables/disables all interrupts. It overrides individual interrupt mask settings. 0: Disable all interrupt sources. 1: Enable each interrupt according to its individual mask setting.
6	ESPI0	**Enable Serial Peripheral Interface (SPI0) Interrupt.** This bit sets the masking of the SPI0 interrupts. 0: Disable all SPI0 interrupts. 1: Enable interrupt requests generated by SPI0.
5	ET2	**Enable Timer 2 Interrupt.** This bit sets the masking of the Timer 2 interrupt. 0: Disable Timer 2 interrupt. 1: Enable interrupt requests generated by the TF2L or TF2H flags.
4	ES0	**Enable UART0 Interrupt.** This bit sets the masking of the UART0 interrupt. 0: Disable UART0 interrupt. 1: Enable UART0 interrupt.
3	ET1	**Enable Timer 1 Interrupt.** This bit sets the masking of the Timer 1 interrupt. 0: Disable all Timer 1 interrupt. 1: Enable interrupt requests generated by the TF1 flag.
2	EX1	**Enable External Interrupt 1.** This bit sets the masking of External Interrupt 1. 0: Disable external interrupt 1. 1: Enable interrupt requests generated by the $\overline{\text{INT1}}$ input.
1	ET0	**Enable Timer 0 Interrupt.** This bit sets the masking of the Timer 0 interrupt. 0: Disable all Timer 0 interrupt. 1: Enable interrupt requests generated by the TF0 flag.
0	EX0	**Enable External Interrupt 0.** This bit sets the masking of External Interrupt 0. 0: Disable external interrupt 0. 1: Enable interrupt requests generated by the $\overline{\text{INT0}}$ input.

SFR Definition 12.2. IP: Interrupt Priority

Bit	7	6	5	4	3	2	1	0
Name		PSPI0	PT2	PS0	PT1	PX1	PT0	PX0
Type	R	R/W	R/W	R/W	R/W	R/W	R/W	R/W
Reset	1	0	0	0	0	0	0	0

SFR Page = 0x0; SFR Address = 0xB8; Bit-Addressable

Bit	Name	Function
7	Unused	**Unused.** Read = 1b, Write = don't care.
6	PSPI0	**Serial Peripheral Interface (SPI0) Interrupt Priority Control.** This bit sets the priority of the SPI0 interrupt. 0: SPI0 interrupt set to low priority level. 1: SPI0 interrupt set to high priority level.
5	PT2	**Timer 2 Interrupt Priority Control.** This bit sets the priority of the Timer 2 interrupt. 0: Timer 2 interrupt set to low priority level. 1: Timer 2 interrupt set to high priority level.
4	PS0	**UART0 Interrupt Priority Control.** This bit sets the priority of the UART0 interrupt. 0: UART0 interrupt set to low priority level. 1: UART0 interrupt set to high priority level.
3	PT1	**Timer 1 Interrupt Priority Control.** This bit sets the priority of the Timer 1 interrupt. 0: Timer 1 interrupt set to low priority level. 1: Timer 1 interrupt set to high priority level.
2	PX1	**External Interrupt 1 Priority Control.** This bit sets the priority of the External Interrupt 1 interrupt. 0: External Interrupt 1 set to low priority level. 1: External Interrupt 1 set to high priority level.
1	PT0	**Timer 0 Interrupt Priority Control.** This bit sets the priority of the Timer 0 interrupt. 0: Timer 0 interrupt set to low priority level. 1: Timer 0 interrupt set to high priority level.
0	PX0	**External Interrupt 0 Priority Control.** This bit sets the priority of the External Interrupt 0 interrupt. 0: External Interrupt 0 set to low priority level. 1: External Interrupt 0 set to high priority level.

SFR Definition 12.3. EIE1: Extended Interrupt Enable 1

Bit	7	6	5	4	3	2	1	0
Name	ET3	ECP1	ECP0	EPCA0	EADC0	EWADC0	ERTC0A	ESMB0
Type	R/W	R/W	R/W	R/W	R/W	R/W	R/W	R/W
Reset	0	0	0	0	0	0	0	0

SFR Page = All Pages; SFR Address = 0xE6

Bit	Name	Function
7	ET3	**Enable Timer 3 Interrupt.** This bit sets the masking of the Timer 3 interrupt. 0: Disable Timer 3 interrupts. 1: Enable interrupt requests generated by the TF3L or TF3H flags.
6	ECP1	**Enable Comparator1 (CP1) Interrupt.** This bit sets the masking of the CP1 interrupt. 0: Disable CP1 interrupts. 1: Enable interrupt requests generated by the CP1RIF or CP1FIF flags.
5	ECP0	**Enable Comparator0 (CP0) Interrupt.** This bit sets the masking of the CP0 interrupt. 0: Disable CP0 interrupts. 1: Enable interrupt requests generated by the CP0RIF or CP0FIF flags.
4	EPCA0	**Enable Programmable Counter Array (PCA0) Interrupt.** This bit sets the masking of the PCA0 interrupts. 0: Disable all PCA0 interrupts. 1: Enable interrupt requests generated by PCA0.
3	EADC0	**Enable ADC0 Conversion Complete Interrupt.** This bit sets the masking of the ADC0 Conversion Complete interrupt. 0: Disable ADC0 Conversion Complete interrupt. 1: Enable interrupt requests generated by the AD0INT flag.
2	EWADC0	**Enable Window Comparison ADC0 Interrupt.** This bit sets the masking of ADC0 Window Comparison interrupt. 0: Disable ADC0 Window Comparison interrupt. 1: Enable interrupt requests generated by ADC0 Window Compare flag (AD0WINT).
1	ERTC0A	**Enable SmaRTClock Alarm Interrupts.** This bit sets the masking of the SmaRTClock Alarm interrupt. 0: Disable SmaRTClock Alarm interrupts. 1: Enable interrupt requests generated by a SmaRTClock Alarm.
0	ESMB0	**Enable SMBus (SMB0) Interrupt.** This bit sets the masking of the SMB0 interrupt. 0: Disable all SMB0 interrupts. 1: Enable interrupt requests generated by SMB0.

SFR Definition 12.4. EIP1: Extended Interrupt Priority 1

Bit	7	6	5	4	3	2	1	0
Name	PT3	PCP1	PCP0	PPCA0	PADC0	PWADC0	PRTC0A	PSMB0
Type	R/W	R/W	R/W	R/W	R/W	R/W	R/W	R/W
Reset	0	0	0	0	0	0	0	0

SFR Page = All Pages; SFR Address = 0xF6

Bit	Name	Function
7	PT3	**Timer 3 Interrupt Priority Control.** This bit sets the priority of the Timer 3 interrupt. 0: Timer 3 interrupts set to low priority level. 1: Timer 3 interrupts set to high priority level.
6	PCP1	**Comparator1 (CP1) Interrupt Priority Control.** This bit sets the priority of the CP1 interrupt. 0: CP1 interrupt set to low priority level. 1: CP1 interrupt set to high priority level.
5	PCP0	**Comparator0 (CP0) Interrupt Priority Control.** This bit sets the priority of the CP0 interrupt. 0: CP0 interrupt set to low priority level. 1: CP0 interrupt set to high priority level.
4	PPCA0	**Programmable Counter Array (PCA0) Interrupt Priority Control.** This bit sets the priority of the PCA0 interrupt. 0: PCA0 interrupt set to low priority level. 1: PCA0 interrupt set to high priority level.
3	PADC0	**ADC0 Conversion Complete Interrupt Priority Control.** This bit sets the priority of the ADC0 Conversion Complete interrupt. 0: ADC0 Conversion Complete interrupt set to low priority level. 1: ADC0 Conversion Complete interrupt set to high priority level.
2	PWADC0	**ADC0 Window Comparator Interrupt Priority Control.** This bit sets the priority of the ADC0 Window interrupt. 0: ADC0 Window interrupt set to low priority level. 1: ADC0 Window interrupt set to high priority level.
1	PRTC0A	**SmaRTClock Alarm Interrupt Priority Control.** This bit sets the priority of the SmaRTClock Alarm interrupt. 0: SmaRTClock Alarm interrupt set to low priority level. 1: SmaRTClock Alarm interrupt set to high priority level.
0	PSMB0	**SMBus (SMB0) Interrupt Priority Control.** This bit sets the priority of the SMB0 interrupt. 0: SMB0 interrupt set to low priority level. 1: SMB0 interrupt set to high priority level.

SFR Definition 12.5. EIE2: Extended Interrupt Enable 2

Bit	7	6	5	4	3	2	1	0
Name					ESPI1	ERTC0F	EMAT	EWARN
Type	R/W	R/W	R/W	R/W	R/W	R/W	R/W	R/W
Reset	0	0	0	0	0	0	0	0

SFR Page = All Pages;SFR Address = 0xE7

Bit	Name	Function
7:4	Unused	**Unused.** Read = 0000b. Write = Don't care.
3	ESPI1	**Enable Serial Peripheral Interface (SPI1) Interrupt.** This bit sets the masking of the SPI1 interrupts. 0: Disable all SPI1 interrupts. 1: Enable interrupt requests generated by SPI1.
2	ERTC0F	**Enable SmaRTClock Oscillator Fail Interrupt.** This bit sets the masking of the SmaRTClock Alarm interrupt. 0: Disable SmaRTClock Alarm interrupts. 1: Enable interrupt requests generated by SmaRTClock Alarm.
1	EMAT	**Enable Port Match Interrupts.** This bit sets the masking of the Port Match Event interrupt. 0: Disable all Port Match interrupts. 1: Enable interrupt requests generated by a Port Match.
0	EWARN	**Enable Supply Monitor Early Warning Interrupt.** This bit sets the masking of the Supply Monitor Early Warning interrupt. 0: Disable the Supply Monitor Early Warning interrupt. 1: Enable interrupt requests generated by the Supply Monitor(s). 'F912 and 'F902 devices can provide an early warning for both VBAT and the VDD/DC+ supply. All other devices only provide an early warning for the VDD/DC+ supply.

SFR Definition 12.6. EIP2: Extended Interrupt Priority 2

Bit	7	6	5	4	3	2	1	0
Name					PSPI1	PRTC0F	PMAT	PWARN
Type	R	R	R	R	R/W	R/W	R/W	R/W
Reset	0	0	0	0	0	0	0	0

SFR Page = All Pages; SFR Address = 0xF7

Bit	Name	Function
7:4	Unused	**Unused.** Read = 0000b. Write = Don't care.
3	PSPI1	**Serial Peripheral Interface (SPI1) Interrupt Priority Control.** This bit sets the priority of the SPI1 interrupt. 0: SP1 interrupt set to low priority level. 1: SPI1 interrupt set to high priority level.
2	PRTC0F	**SmaRTClock Oscillator Fail Interrupt Priority Control.** This bit sets the priority of the SmaRTClock Alarm interrupt. 0: SmaRTClock Alarm interrupt set to low priority level. 1: SmaRTClock Alarm interrupt set to high priority level.
1	PMAT	**Port Match Interrupt Priority Control.** This bit sets the priority of the Port Match Event interrupt. 0: Port Match interrupt set to low priority level. 1: Port Match interrupt set to high priority level.
0	PWARN	**Supply Monitor Early Warning Interrupt Priority Control.** This bit sets the priority of the VDD/DC+ Supply Monitor Early Warning interrupt. 0: Supply Monitor Early Warning interrupt set to low priority level. 1: Supply Monitor Early Warning interrupt set to high priority level.

12.6. External Interrupts $\overline{\text{INT0}}$ and $\overline{\text{INT1}}$

The $\overline{\text{INT0}}$ and $\overline{\text{INT1}}$ external interrupt sources are configurable as active high or low, edge or level sensitive. The IN0PL ($\overline{\text{INT0}}$ Polarity) and IN1PL ($\overline{\text{INT1}}$ Polarity) bits in the IT01CF register select active high or active low; the IT0 and IT1 bits in TCON (Section “25.1. Timer 0 and Timer 1” on page 281) select level or edge sensitive. The table below lists the possible configurations.

IT0	IN0PL	$\overline{\text{INT0}}$ Interrupt
1	0	Active low, edge sensitive
1	1	Active high, edge sensitive
0	0	Active low, level sensitive
0	1	Active high, level sensitive

IT1	IN1PL	$\overline{\text{INT1}}$ Interrupt
1	0	Active low, edge sensitive
1	1	Active high, edge sensitive
0	0	Active low, level sensitive
0	1	Active high, level sensitive

$\overline{\text{INT0}}$ and $\overline{\text{INT1}}$ are assigned to Port pins as defined in the IT01CF register (see SFR Definition 12.7). Note that $\overline{\text{INT0}}$ and $\overline{\text{INT0}}$ Port pin assignments are independent of any Crossbar assignments. $\overline{\text{INT0}}$ and $\overline{\text{INT1}}$ will monitor their assigned Port pins without disturbing the peripheral that was assigned the Port pin via the Crossbar. To assign a Port pin only to $\overline{\text{INT0}}$ and/or $\overline{\text{INT1}}$, configure the Crossbar to skip the selected pin(s). This is accomplished by setting the associated bit in register XBR0 (see Section “21.3. Priority Crossbar Decoder” on page 218 for complete details on configuring the Crossbar).

IE0 (TCON.1) and IE1 (TCON.3) serve as the interrupt-pending flags for the $\overline{\text{INT0}}$ and $\overline{\text{INT1}}$ external interrupts, respectively. If an $\overline{\text{INT0}}$ or $\overline{\text{INT1}}$ external interrupt is configured as edge-sensitive, the corresponding interrupt-pending flag is automatically cleared by the hardware when the CPU vectors to the ISR. When configured as level sensitive, the interrupt-pending flag remains logic 1 while the input is active as defined by the corresponding polarity bit (IN0PL or IN1PL); the flag remains logic 0 while the input is inactive. The external interrupt source must hold the input active until the interrupt request is recognized. It must then deactivate the interrupt request before execution of the ISR completes or another interrupt request will be generated.

SFR Definition 12.7. IT01CF: $\overline{\text{INT0}}$/$\overline{\text{INT1}}$ Configuration

Bit	7	6	5	4	3	2	1	0
Name	IN1PL	IN1SL[2:0]			IN0PL	IN0SL[2:0]		
Type	R/W	R/W			R/W	R/W		
Reset	0	0	0	0	0	0	0	1

SFR Page = 0x0; SFR Address = 0xE4

Bit	Name	Function
7	IN1PL	**$\overline{\text{INT1}}$ Polarity.** 0: $\overline{\text{INT1}}$ input is active low. 1: $\overline{\text{INT1}}$ input is active high.
6:4	IN1SL[2:0]	**$\overline{\text{INT1}}$ Port Pin Selection Bits.** These bits select which Port pin is assigned to $\overline{\text{INT1}}$. Note that this pin assignment is independent of the Crossbar; $\overline{\text{INT1}}$ will monitor the assigned Port pin without disturbing the peripheral that has been assigned the Port pin via the Crossbar. The Crossbar will not assign the Port pin to a peripheral if it is configured to skip the selected pin. 000: Select P0.0 001: Select P0.1 010: Select P0.2 011: Select P0.3 100: Select P0.4 101: Select P0.5 110: Select P0.6 111: Select P0.7
3	IN0PL	**$\overline{\text{INT0}}$ Polarity.** 0: $\overline{\text{INT0}}$ input is active low. 1: $\overline{\text{INT0}}$ input is active high.
2:0	IN0SL[2:0]	**$\overline{\text{INT0}}$ Port Pin Selection Bits.** These bits select which Port pin is assigned to $\overline{\text{INT0}}$. Note that this pin assignment is independent of the Crossbar; $\overline{\text{INT0}}$ will monitor the assigned Port pin without disturbing the peripheral that has been assigned the Port pin via the Crossbar. The Crossbar will not assign the Port pin to a peripheral if it is configured to skip the selected pin. 000: Select P0.0 001: Select P0.1 010: Select P0.2 011: Select P0.3 100: Select P0.4 101: Select P0.5 110: Select P0.6 111: Select P0.7

13. Flash Memory

On-chip, re-programmable Flash memory is included for program code and non-volatile data storage. The Flash memory can be programmed in-system through the C2 interface or by software using the MOVX write instruction. Once cleared to logic 0, a Flash bit must be erased to set it back to logic 1. Flash bytes would typically be erased (set to 0xFF) before being reprogrammed. The write and erase operations are automatically timed by hardware for proper execution; data polling to determine the end of the write/erase operations is not required. Code execution is stalled during Flash write/erase operations. Refer to Table 4.6 for complete Flash memory electrical characteristics.

13.1. Programming The Flash Memory

The simplest means of programming the Flash memory is through the C2 interface using programming tools provided by Silicon Laboratories or a third party vendor. This is the only means for programming a non-initialized device. For details on the C2 commands to program Flash memory, see Section “27. C2 Interface” on page 322.

The Flash memory can be programmed by software using the MOVX write instruction with the address and data byte to be programmed provided as normal operands. Before programming Flash memory using MOVX, Flash programming operations must be enabled by: (1) setting the PSWE Program Store Write Enable bit (PSCTL.0) to logic 1 (this directs the MOVX writes to target Flash memory); and (2) Writing the Flash key codes in sequence to the Flash Lock register (FLKEY). The PSWE bit remains set until cleared by software. For detailed guidelines on programming Flash from firmware, please see Section “13.5. Flash Write and Erase Guidelines” on page 143.

To ensure the integrity of the Flash contents, the on-chip VDD Monitor must be enabled and enabled as a reset source in any system that includes code that writes and/or erases Flash memory from software. Furthermore, there should be no delay between enabling the V_{DD} Monitor and enabling the V_{DD} Monitor as a reset source. Any attempt to write or erase Flash memory while the V_{DD} Monitor is disabled, or not enabled as a reset source, will cause a Flash Error device reset.

13.1.1. Flash Lock and Key Functions

Flash writes and erases by user software are protected with a lock and key function. The Flash Lock and Key Register (FLKEY) must be written with the correct key codes, in sequence, before Flash operations may be performed. The key codes are: 0xA5, 0xF1. The timing does not matter, but the codes must be written in order. If the key codes are written out of order, or the wrong codes are written, Flash writes and erases will be disabled until the next system reset. Flash writes and erases will also be disabled if a Flash write or erase is attempted before the key codes have been written properly. The Flash lock resets after each write or erase; the key codes must be written again before a following Flash operation can be performed. The FLKEY register is detailed in SFR Definition 13.2.

13.1.2. Flash Erase Procedure

The Flash memory is organized in 512-byte pages. The erase operation applies to an entire page (setting all bytes in the page to 0xFF). To erase an entire Flash page, perform the following steps:

1. Save current interrupt state and disable interrupts.
2. Set the PSEE bit (register PSCTL).
3. Set the PSWE bit (register PSCTL).
4. Write the first key code to FLKEY: 0xA5.
5. Write the second key code to FLKEY: 0xF1.
6. Using the MOVX instruction, write a data byte to any location within the page to be erased.
7. Clear the PSWE and PSEE bits.
8. Restore previous interrupt state.

Steps 4–6 must be repeated for each 512-byte page to be erased.

Notes:

1. To maintain code compatibility with the ‘F93x-’F92x product family, the erase procedure should be performed on two consecutive 512-byte sections of memory at a time. This allows the same software to run on devices with 1024-byte or 512-byte Flash pages. Using this technique, devices with 1024-byte Flash pages will have each Flash page erased twice.
2. Flash security settings may prevent erasure of some Flash pages, such as the reserved area and the page containing the lock bytes. For a summary of Flash security settings and restrictions affecting Flash erase operations, please see Section “13.3. Security Options” on page 140.
3. 8-bit MOVX instructions cannot be used to erase or write to Flash memory at addresses higher than 0x00FF.

13.1.3. Flash Write Procedure

A write to Flash memory can clear bits to logic 0 but cannot set them; only an erase operation can set bits to logic 1 in Flash. **A byte location to be programmed should be erased before a new value is written.**

The recommended procedure for writing a single byte in Flash is as follows:

1. Save current interrupt state and disable interrupts.
2. Ensure that the Flash byte has been erased (has a value of 0xFF).
3. Set the PSWE bit (register PSCTL).
4. Clear the PSEE bit (register PSCTL).
5. Write the first key code to FLKEY: 0xA5.
6. Write the second key code to FLKEY: 0xF1.
7. Using the MOVX instruction, write a single data byte to the desired location within the 1024-byte sector.
8. Clear the PSWE bit.
9. Restore previous interrupt state.

Steps 5–7 must be repeated for each byte to be written.

Notes:

1. Flash security settings may prevent writes to some areas of Flash, such as the reserved area. For a summary of Flash security settings and restrictions affecting Flash write operations, please see Section “13.3. Security Options” on page 140.
2. 8-bit MOVX instructions cannot be used to erase or write to Flash memory at addresses higher than 0x00FF.

13.2. Non-volatile Data Storage

The Flash memory can be used for non-volatile data storage as well as program code. This allows data such as calibration coefficients to be calculated and stored at run time. Data is written using the MOVX write instruction and read using the MOVC instruction. MOVX read instructions always target XRAM.

An additional 512-byte scratchpad is available for non-volatile data storage. It is accessible at addresses 0x0000 to 0x01FF when SFLE is set to 1. The scratchpad area cannot be used for code execution.

13.3. Security Options

The CIP-51 provides security options to protect the Flash memory from inadvertent modification by software as well as to prevent the viewing of proprietary program code and constants. The Program Store Write Enable (bit PSWE in register PSCTL) and the Program Store Erase Enable (bit PSEE in register PSCTL) bits protect the Flash memory from accidental modification by software. PSWE must be explicitly set to 1 before software can modify the Flash memory; both PSWE and PSEE must be set to 1 before software can erase Flash memory. Additional security features prevent proprietary program code and data constants from being read or altered across the C2 interface.

A Security Lock Byte located at the last byte of Flash user space offers protection of the Flash program memory from access (reads, writes, or erases) by unprotected code or the C2 interface. The Flash security mechanism allows the user to lock *n* 512-byte Flash pages, starting at page 0 (addresses 0x0000 to 0x01FF), where *n* is the 1s complement number represented by the Security Lock Byte. **Note that the page containing the Flash Security Lock Byte is unlocked when no other Flash pages are locked (all bits of the Lock Byte are 1) and locked when any other Flash pages are locked (any bit of the Lock Byte is 0).**

Security Lock Byte:	1111 1011b
ones Complement:	0000 0100b
Flash pages locked:	5 (First four Flash pages + Lock Byte Page)
Addresses locked:	0x0000 to 0x07FF (first four Flash pages) and 0x3A00 to 0x3BFF (Lock Byte Page)

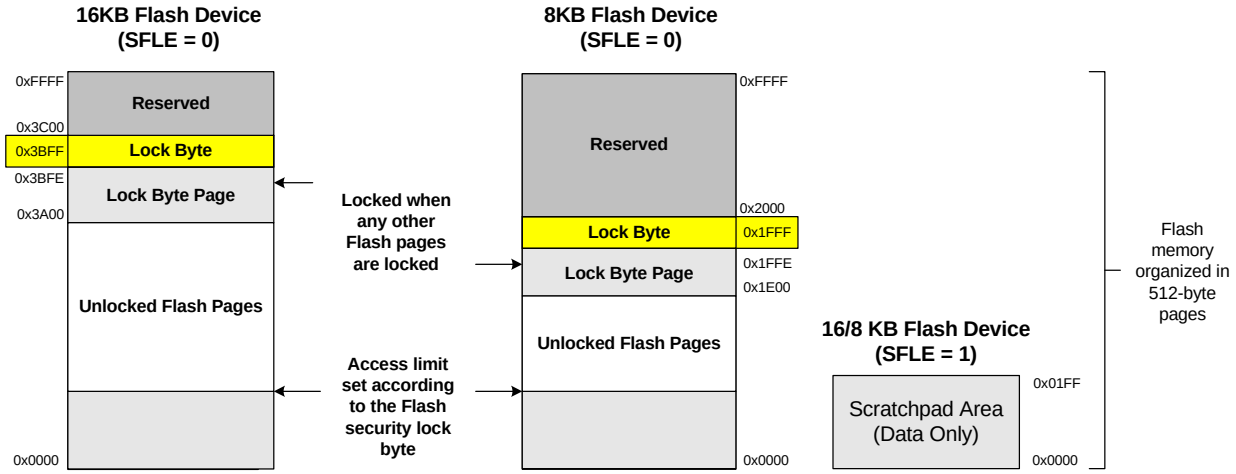

Figure 13.1. Flash Program Memory Map (16 kB and 8 kB devices)

The level of Flash security depends on the Flash access method. The three Flash access methods that can be restricted are reads, writes, and erases from the C2 debug interface, user firmware executing on unlocked pages, and user firmware executing on locked pages. Table 13.1 summarizes the Flash security features of the C8051F91x-C8051F90x devices.

Table 13.1. Flash Security Summary

Action	C2 Debug Interface	User Firmware executing from:	
		an unlocked page	a locked page
Read, Write or Erase unlocked pages (except page with Lock Byte)	Permitted	Permitted	Permitted
Read, Write or Erase locked pages (except page with Lock Byte)	Not Permitted	FEDR	Permitted
Read or Write page containing Lock Byte (if no pages are locked)	Permitted	Permitted	Permitted
Read or Write page containing Lock Byte (if any page is locked)	Not Permitted	FEDR	Permitted
Read contents of Lock Byte (if no pages are locked)	Permitted	Permitted	Permitted
Read contents of Lock Byte (if any page is locked)	Not Permitted	FEDR	Permitted
Erase page containing Lock Byte (if no pages are locked)	Permitted	FEDR	FEDR
Erase page containing Lock Byte - Unlock all pages (if any page is locked)	Only by C2DE	FEDR	FEDR
Lock additional pages (change 1s to 0s in the Lock Byte)	Not Permitted	FEDR	FEDR
Unlock individual pages (change 0s to 1s in the Lock Byte)	Not Permitted	FEDR	FEDR
Read, Write or Erase Reserved Area	Not Permitted	FEDR	FEDR

C2DE—C2 Device Erase (Erases all Flash pages including the page containing the Lock Byte)
FEDR—Not permitted; Causes Flash Error Device Reset (FERROR bit in RSTSRC is 1 after reset)

- All prohibited operations that are performed via the C2 interface are ignored (do not cause device reset).
- Locking any Flash page also locks the page containing the Lock Byte.
- Once written to, the Lock Byte cannot be modified except by performing a C2 Device Erase.
- If user code writes to the Lock Byte, the Lock does not take effect until the next device reset.
- The scratchpad is locked when all other Flash pages are locked.
- The scratchpad is erased when a Flash Device Erase command is performed.

13.4. Determining the Device Part Number at Run Time

In many applications, user software may need to determine the MCU part number at run time in order to determine the hardware capabilities. The part number can be determined by reading the value of the Flash byte at address 0x3FFE.

The value of the Flash byte at address 0x3FFE can be decoded as follows:

0xD0—C8051F901
0xD1—C8051F902
0xD2—C8051F911
0xD3—C8051F912

13.5. Flash Write and Erase Guidelines

Any system which contains routines which write or erase Flash memory from software involves some risk that the write or erase routines will execute unintentionally if the CPU is operating outside its specified operating range of VDD, system clock frequency, or temperature. This accidental execution of Flash modifying code can result in alteration of Flash memory contents causing a system failure that is only recoverable by re-Flashing the code in the device.

To help prevent the accidental modification of Flash by firmware, the VDD Monitor must be enabled and enabled as a reset source on C8051F91x-C8051F90x devices for the Flash to be successfully modified. **If either the VDD Monitor or the VDD Monitor reset source is not enabled, a Flash Error Device Reset will be generated when the firmware attempts to modify the Flash.**

The following guidelines are recommended for any system that contains routines which write or erase Flash from code.

13.5.1. VDD Maintenance and the VDD Monitor

1. If the system power supply is subject to voltage or current "spikes," add sufficient transient protection devices to the power supply to ensure that the supply voltages listed in the Absolute Maximum Ratings table are not exceeded.
2. Make certain that the minimum VDD rise time specification of 1 ms is met. If the system cannot meet this rise time specification, then add an external VDD brownout circuit to the $\overline{\text{RST}}$ pin of the device that holds the device in reset until VDD reaches the minimum device operating voltage and re-asserts $\overline{\text{RST}}$ if VDD drops below the minimum device operating voltage.
3. Keep the on-chip VDD Monitor enabled and enable the VDD Monitor as a reset source as early in code as possible. This should be the first set of instructions executed after the Reset Vector. For C-based systems, this will involve modifying the startup code added by the C compiler. See your compiler documentation for more details. Make certain that there are no delays in software between enabling the VDD Monitor and enabling the VDD Monitor as a reset source. Code examples showing this can be found in “AN201: Writing to Flash from Firmware," available from the Silicon Laboratories website.

Note: On C8051F91x-C8051F90x devices, both the VDD Monitor and the VDD Monitor reset source must be enabled to write or erase Flash without generating a Flash Error Device Reset.

Note: On C8051F91x-C8051F90x devices, both the VDD Monitor and the VDD Monitor reset source are enabled by hardware after a power-on reset.

4. As an added precaution, explicitly enable the VDD Monitor and enable the VDD Monitor as a reset source inside the functions that write and erase Flash memory. The VDD Monitor enable instructions should be placed just after the instruction to set PSWE to a 1, but before the Flash write or erase operation instruction.
5. Make certain that all writes to the RSTSRC (Reset Sources) register use direct assignment operators and explicitly DO NOT use the bit-wise operators (such as AND or OR). For example, "RSTSRC = 0x02" is correct, but "RSTSRC |= 0x02" is incorrect.
6. Make certain that all writes to the RSTSRC register explicitly set the PORSF bit to a 1. Areas to check are initialization code which enables other reset sources, such as the Missing Clock Detector or Comparator, for example, and instructions which force a Software Reset. A global search on "RSTSRC" can quickly verify this.

13.5.2. PSWE Maintenance

7. Reduce the number of places in code where the PSWE bit (b0 in PSCTL) is set to a 1. There should be exactly one routine in code that sets PSWE to a 1 to write Flash bytes and one routine in code that sets both PSWE and PSEE both to a 1 to erase Flash pages.
8. Minimize the number of variable accesses while PSWE is set to a 1. Handle pointer address updates and loop maintenance outside the "PSWE = 1;... PSWE = 0;" area. Code examples showing this can be found in AN201, *"Writing to Flash from Firmware"*, available from the Silicon Laboratories web site.
9. Disable interrupts prior to setting PSWE to a 1 and leave them disabled until after PSWE has been reset to 0. Any interrupts posted during the Flash write or erase operation will be serviced in priority order after the Flash operation has been completed and interrupts have been re-enabled by software.
10. Make certain that the Flash write and erase pointer variables are not located in XRAM. See your compiler documentation for instructions regarding how to explicitly locate variables in different memory areas.
11. Add address bounds checking to the routines that write or erase Flash memory to ensure that a routine called with an illegal address does not result in modification of the Flash.

13.5.3. System Clock

12. If operating from an external crystal, be advised that crystal performance is susceptible to electrical interference and is sensitive to layout and to changes in temperature. If the system is operating in an electrically noisy environment, use the internal oscillator or use an external CMOS clock.
13. If operating from the external oscillator, switch to the internal oscillator during Flash write or erase operations. The external oscillator can continue to run, and the CPU can switch back to the external oscillator after the Flash operation has completed.

Additional Flash recommendations and example code can be found in “AN201: Writing to Flash from Firmware", available from the Silicon Laboratories web site.

13.6. Minimizing Flash Read Current

The Flash memory in the C8051F91x-C8051F90x devices is responsible for a substantial portion of the total digital supply current when the device is executing code. Below are suggestions to minimize Flash read current.

1. Use idle, suspend, or sleep modes while waiting for an interrupt, rather than polling the interrupt flag. Idle Mode is particularly well-suited for use in implementing short pauses, since the wake-up time is no more than three system clock cycles. See the Power Management chapter for details on the various low-power operating modes.
2. C8051F91x-C8051F90x devices have a one-shot timer that saves power when operating at system clock frequencies of 14 MHz or less. The one-shot timer generates a minimum-duration enable signal for the Flash sense amps on each clock cycle in which the Flash memory is accessed. This allows the Flash to remain in a low power state for the remainder of the long clock cycle.
   At clock frequencies above 14 MHz, the system clock cycle becomes short enough that the one-shot timer no longer provides a power benefit. Disabling the one-shot timer at higher frequencies reduces power consumption. The one-shot is enabled by default, and it can be disabled (bypassed) by setting the BYPASS bit (FLSCL.6) to logic 1. To re-enable the one-shot, clear the BYPASS bit to logic 0.
3. Flash read current depends on the number of address lines that toggle between sequential Flash read operations. In most cases, the difference in power is relatively small (on the order of 5%).

   The Flash memory is organized in rows of 64 bytes. A substantial current increase can be detected when the read address jumps from one row in the Flash memory to another. Consider a 3-cycle loop (e.g., SJMP $, or while(1);) which straddles a Flash row boundary. The Flash address jumps from one row to another on two of every three clock cycles. This can result in a current increase of up 30% when compared to the same 3-cycle loop contained entirely within a single row.

   To minimize the power consumption of small loops, it is best to locate them within a single row, if possible. To check if a loop is contained within a Flash row, divide the starting address of the first instruction in the loop by 64. If the remainder (result of modulo operation) plus the length of the loop is less than 63, then the loop fits inside a single Flash row. Otherwise, the loop will be straddling two adjacent Flash rows. If a loop executes in 20 or more clock cycles, then the transitions from one row to another will occur on relatively few clock cycles, and any resulting increase in operating current will be negligible.

   To write software that is compatible with all devices in the ‘F93x-’F92x and ‘F91x-’F90x product families, the Flash row size should be considered 64 bytes.

SFR Definition 13.1. PSCTL: Program Store R/W Control

Bit	7	6	5	4	3	2	1	0
Name						SFLE	PSEE	PSWE
Type	R	R	R	R	R	R/W	R/W	R/W
Reset	0	0	0	0	0	0	0	0

SFR Page =0x0; SFR Address = 0x8F

Bit	Name	Function
7:3	Unused	**Unused.** Read = 00000b, Write = don't care.
2	SFLE	**Scratchpad Flash Memory Access Enable.** When this bit is set, Flash MOVC reads and MOVX writes from user software are directed to the Scratchpad Flash sector. Flash accesses outside the address range 0x0000-0x01FF should not be attempted and may yield undefined results when SFLE is set to 1. 0: Flash access from user software directed to the Program/Data Flash sector. 1: Flash access from user software directed to the Scratchpad Sector.
1	PSEE	**Program Store Erase Enable.** Setting this bit (in combination with PSWE) allows an entire page of Flash program memory to be erased. If this bit is logic 1 and Flash writes are enabled (PSWE is logic 1), a write to Flash memory using the MOVX instruction will erase the entire page that contains the location addressed by the MOVX instruction. The value of the data byte written does not matter. 0: Flash program memory erasure disabled. 1: Flash program memory erasure enabled.
0	PSWE	**Program Store Write Enable.** Setting this bit allows writing a byte of data to the Flash program memory using the MOVX write instruction. The Flash location should be erased before writing data. 0: Writes to Flash program memory disabled. 1: Writes to Flash program memory enabled; the MOVX write instruction targets Flash memory.

SFR Definition 13.2. FLKEY: Flash Lock and Key

Bit	7	6	5	4	3	2	1	0
Name	FLKEY[7:0]							
Type	R/W							
Reset	0	0	0	0	0	0	0	0

SFR Page = 0x0; SFR Address = 0xB6

Bit	Name	Function
7:0	FLKEY[7:0]	**Flash Lock and Key Register.** Write: This register provides a lock and key function for Flash erasures and writes. Flash writes and erases are enabled by writing 0xA5 followed by 0xF1 to the FLKEY register. Flash writes and erases are automatically disabled after the next write or erase is complete. If any writes to FLKEY are performed incorrectly, or if a Flash write or erase operation is attempted while these operations are disabled, the Flash will be permanently locked from writes or erasures until the next device reset. If an application never writes to Flash, it can intentionally lock the Flash by writing a non-0xA5 value to FLKEY from software. Read: When read, bits 1–0 indicate the current Flash lock state. 00: Flash is write/erase locked. 01: The first key code has been written (0xA5). 10: Flash is unlocked (writes/erases allowed). 11: Flash writes/erases disabled until the next reset.

SFR Definition 13.3. FLSCL: Flash Scale

Bit	7	6	5	4	3	2	1	0
Name		BYPASS						
Type	R	R/W	R	R	R	R	R	R
Reset	0	0	0	0	0	0	0	0

SFR Page = 0x0; SFR Address = 0xB6

Bit	Name	Function
7	Reserved	Reserved. Always Write to 0.
6	BYPASS	**Flash Read Timing One-Shot Bypass.** 0: The one-shot determines the Flash read time. This setting should be used for operating frequencies less than 10 MHz. 1: The system clock determines the Flash read time. This setting should be used for frequencies greater than 10 MHz.
5:0	Reserved	Reserved. Always Write to 000000.
Note: Operations which clear the BYPASS bit do not need to be immediately followed by a benign 3-byte instruction on C8051F912/11/02/01 devices. For code compatibility with C8051F930/31/20/21 devices, a benign 3-byte instruction whose third byte is a don't care should follow the clear operation. See the C8051F93x-C8051F92x data sheet for more details.		

SFR Definition 13.4. FLWR: Flash Write Only

Bit	7	6	5	4	3	2	1	0
Name	FLWR[7:0]							
Type	W							
Reset	0	0	0	0	0	0	0	0

SFR Page = 0x0; SFR Address = 0xE5

Bit	Name	Function
7:0	FLWR[7:0]	**Flash Write Only.** All writes to this register have no effect on system operation.

14. Power Management

C8051F91x-C8051F90x devices support 5 power modes: Normal, Idle, Stop, Suspend, and Sleep. The power management unit (PMU0) allows the device to enter and wake-up from the available power modes. A brief description of each power mode is provided in Table 14.1. Detailed descriptions of each mode can be found in the following sections.

Table 14.1. Power Modes

Power Mode	Description	Wake-Up Sources	Power Savings
Normal	Device fully functional	N/A	Excellent MIPS/mW
Idle	All peripherals fully functional. Very easy to wake up.	Any Interrupt.	Good No Code Execution
Stop	Legacy 8051 low power mode. A reset is required to wake up.	Any Reset.	Good No Code Execution Precision Oscillator Disabled
Suspend	Similar to Stop Mode, but very fast wake-up time and code resumes execution at the next instruction.	SmaRTClock, Port Match, Comparator0, $\overline{\text{RST}}$ pin.	Very Good No Code Execution All Internal Oscillators Disabled System Clock Gated
Sleep	Ultra Low Power and flexible wake-up sources. Code resumes execution at the next instruction. Comparator0 only functional in two-cell mode.	SmaRTClock, Port Match, Comparator0, $\overline{\text{RST}}$ pin.	Excellent Power Supply Gated All Oscillators except SmaRT-Clock Disabled

In battery powered systems, the system should spend as much time as possible in sleep mode in order to preserve battery life. When a task with a fixed number of clock cycles needs to be performed, the device should switch to normal mode, finish the task as quickly as possible, and return to sleep mode. Idle mode and suspend modes provide a very fast wake-up time; however, the power savings in these modes will not be as much as in sleep mode. Stop mode is included for legacy reasons; the system will be more power efficient and easier to wake up when idle, suspend, or sleep mode are used.

Although switching power modes is an integral part of power management, enabling/disabling individual peripherals as needed will help lower power consumption in all power modes. Each analog peripheral can be disabled when not in use or placed in a low power mode. Digital peripherals such as timers or serial busses draw little power whenever they are not in use. Digital peripherals draw no power in Sleep Mode.

14.1. Normal Mode

The MCU is fully functional in Normal Mode. Figure 14.1 shows the on-chip power distribution to various peripherals. There are three supply voltages powering various sections of the chip: VBAT, VDD/DC+, and the 1.8 V internal core supply. VREG0, PMU0 and the SmaRTClock are always powered directly from the VBAT pin. All analog peripherals are directly powered from the VDD/DC+ pin, which is an output in one-cell mode and an input in two-cell mode. All digital peripherals and the CIP-51 core are powered from the 1.8 V internal core supply. The RAM is also powered from the core supply in Normal mode.

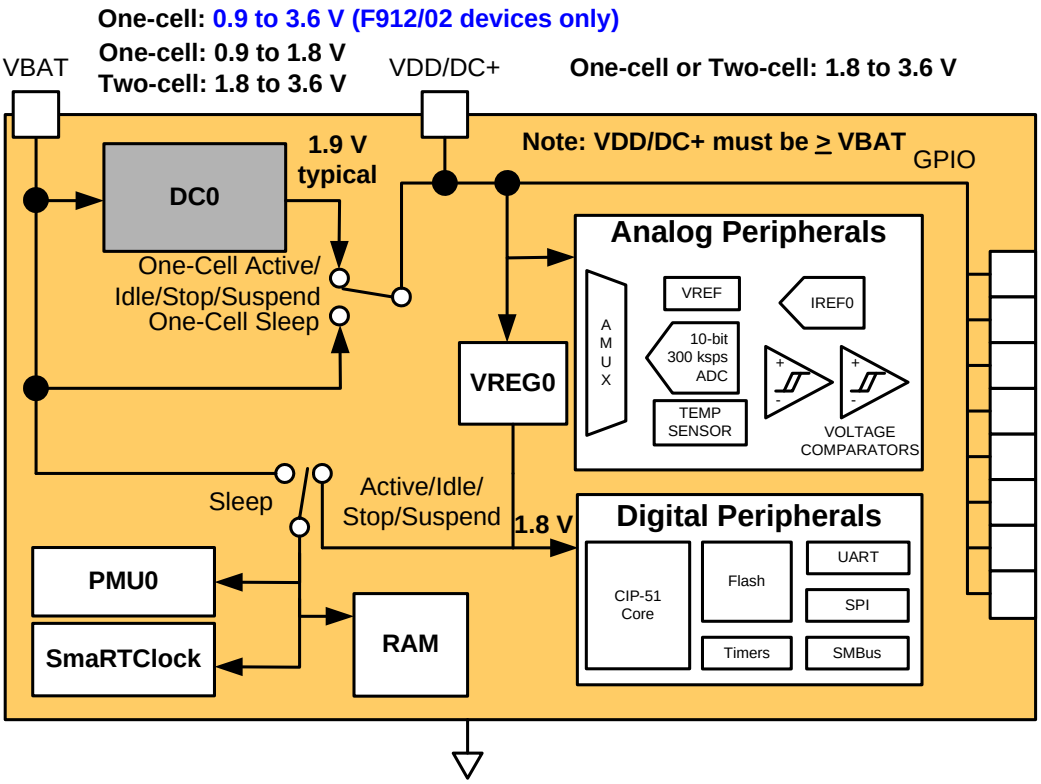

Figure 14.1. C8051F91x-C8051F90x Power Distribution

14.2. Idle Mode

Setting the Idle Mode Select bit (PCON.0) causes the CIP-51 to halt the CPU and enter Idle mode as soon as the instruction that sets the bit completes execution. All internal registers and memory maintain their original data. All analog and digital peripherals can remain active during Idle mode.

Note: To ensure the MCU enters a low power state upon entry into Idle Mode, the one-shot circuit should be enabled by clearing the BYPASS bit (FLSCL.6).

Idle mode is terminated when an enabled interrupt is asserted or a reset occurs. The assertion of an enabled interrupt will cause the Idle Mode Selection bit (PCON.0) to be cleared and the CPU to resume operation. The pending interrupt will be serviced and the next instruction to be executed after the return from interrupt (RETI) will be the instruction immediately following the one that set the Idle Mode Select bit. If Idle mode is terminated by an internal or external reset, the CIP-51 performs a normal reset sequence and begins program execution at address 0x0000.

If enabled, the Watchdog Timer (WDT) will eventually cause an internal watchdog reset and thereby terminate the Idle mode. This feature protects the system from an unintended permanent shutdown in the event of an inadvertent write to the PCON register. If this behavior is not desired, the WDT may be disabled by software prior to entering the idle mode if the WDT was initially configured to allow this operation. This provides the opportunity for additional power savings, allowing the system to remain in the idle mode indefinitely, waiting for an external stimulus to wake up the system. Refer to Section “18.6. PCA Watchdog Timer Reset” on page 183 for more information on the use and configuration of the WDT.

14.3. Stop Mode

Setting the Stop Mode Select bit (PCON.1) causes the CIP-51 to enter stop mode as soon as the instruction that sets the bit completes execution. In stop mode the precision internal oscillator and CPU are stopped; the state of the low power oscillator and the external oscillator circuit is not affected. Each analog peripheral (including the external oscillator circuit) may be shut down individually prior to entering stop mode. Stop mode can only be terminated by an internal or external reset. On reset, the CIP-51 performs the normal reset sequence and begins program execution at address 0x0000.

If enabled, the Missing Clock Detector will cause an internal reset and thereby terminate the Stop mode. The Missing Clock Detector should be disabled if the CPU is to be put to in STOP mode for longer than the MCD timeout.

Stop mode is a legacy 8051 power mode; it will not result in optimal power savings. Sleep or suspend mode will provide more power savings if the MCU needs to be inactive for a long period of time.

Note: To ensure the MCU enters a low power state upon entry into Stop Mode, the one-shot circuit should be enabled by clearing the BYPASS bit (FLSCL.6).

14.4. Suspend Mode

Setting the Suspend Mode Select bit (PMU0CF.6) causes the system clock to be gated off and all internal oscillators disabled. All digital logic (timers, communication peripherals, interrupts, CPU, etc.) stops functioning until one of the enabled wake-up sources occurs.

The following wake-up sources can be configured to wake the device from Suspend Mode:

- SmaRTClock Oscillator Fail
- SmaRTClock Alarm
- Port Match Event
- Comparator0 Rising Edge

Note: Upon wake-up from suspend mode, PMU0 requires two system clocks in order to update the PMU0CF wake-up flags. All flags will read back a value of '0' during the first two system clocks following a wake-up from suspend mode.

In addition, a noise glitch on $\overline{RST}$ that is not long enough to reset the device will cause the device to exit suspend. In order for the MCU to respond to the pin reset event, software must not place the device back into suspend mode for a period of 15 µs. The PMU0CF register may be checked to determine if the wake-up was due to a falling edge on the /RST pin. If the wake-up source is not due to a falling edge on $\overline{RST}$, there is no time restriction on how soon software may place the device back into suspend mode. A 4.7 kW pullup resistor to VDD/DC+ is recommend for RST to prevent noise glitches from waking the device.

14.5. Sleep Mode

Setting the Sleep Mode Select bit (PMU0CF.6) turns off the internal 1.8 V regulator (VREG0) and switches the power supply of all on-chip RAM to the VBAT pin (see Figure 14.1). Power to most digital logic on the chip is disconnected; only PMU0 and the SmaRTClock remain powered. Analog peripherals remain powered in two-cell mode and lose their supply in one-cell mode because the dc-dc converter is disabled. In two-cell mode, only the Comparators remain functional when the device enters Sleep Mode. All other analog peripherals (ADC0, IREF0, External Oscillator, etc.) should be disabled prior to entering Sleep Mode.

Note: When exiting sleep mode, 4 NOP instructions should be located immediately after the write to PMU0CF that placed the device in sleep mode.

GPIO pins configured as digital outputs will retain their output state during sleep mode. In two-cell mode, they will maintain the same current drive capability in sleep mode as they have in normal mode. In one-cell mode, the VDD/DC+ supply will drop to the level of VBAT, which will reduce the output high-voltage level and the source and sink current drive capability.

GPIO pins configured as digital inputs can be used during sleep mode as wakeup sources using the port match feature. In two-cell mode, they will maintain the same input level specs in sleep mode as they have in normal mode. In one-cell mode, the VDD supply will drop to the level of VBAT, which will lower the switching threshold and increase the propagation delay.

‘F912 and ‘F902 devices support a wakeup request for external devices. Upon exit from sleep mode, the wake-up request signal is driven low, allowing other devices in the system to wake up from their low power modes. An example of a system that may benefit from this function is one that uses a high-power dc-dc converter (>65 mW of output power). The dc-dc converter may be disabled when the system is asleep, and can be awoken by the wake-up request signal from the MCU. The wakeup request signal is high when the MCU is awake and low when the MCU is asleep.

Note: By default, the VDD/DC+ supply is connected to VBAT upon entry into Sleep Mode (one-cell mode). If the VDDSLP bit (DC0CF.1) is set to logic 1, the VDD/DC+ supply will float in Sleep Mode. This allows the decoupling capacitance on the VDD/DC+ supply to maintain the supply rail until the capacitors are discharged. For relatively short sleep intervals, this can result in substantial power savings because the decoupling capacitance is not continuously charged and discharged.

RAM and SFR register contents are preserved in sleep mode as long as the voltage on VBAT does not fall

below V_{POR}. The PC counter and all other volatile state information is preserved allowing the device to resume code execution upon waking up from Sleep mode. The following wake-up sources can be configured to wake the device from sleep mode:

- SmaRTClock Oscillator Fail
- SmaRTClock Alarm
- Port Match Event
- Comparator0 Rising Edge.

The Comparator0 Rising Edge wakeup is only valid in two-cell mode. The comparator requires a supply voltage of at least 1.8 V to operate properly. On ‘F912 and ‘F902 devices, the VBAT supply monitor can be disabled to save power by writing 1 to the MONDIS (PMU0MD.5) bit. When the VBAT supply monitor is disabled, all reset sources will trigger a full POR and will re-enable the VBAT supply monitor.

In addition, any falling edge on $\overline{RST}$ (due to a pin reset or a noise glitch) will cause the device to exit sleep mode. In order for the MCU to respond to the pin reset event, software must not place the device back into sleep mode for a period of 15 µs. The PMU0CF register may be checked to determine if the wake-up was due to a falling edge on the $\overline{RST}$ pin. If the wake-up source is not due to a falling edge on $\overline{RST}$, there is no time restriction on how soon software may place the device back into sleep mode. A 4.7 kΩ pullup resistor to VDD/DC+ is recommend for $\overline{RST}$ to prevent noise glitches from waking the device.

14.6. Configuring Wakeup Sources

Before placing the device in a low power mode, one or more wakeup sources should be enabled so that the device does not remain in the low power mode indefinitely. For Idle Mode, this includes enabling any interrupt. For Stop Mode, this includes enabling any reset source or relying on the $\overline{RST}$ pin to reset the device.

Wake-up sources for suspend and sleep modes are configured through the PMU0CF register. Wake-up sources are enabled by writing 1 to the corresponding wake-up source enable bit. Wake-up sources must be re-enabled each time the device is placed in suspend or sleep mode, in the same write that places the device in the low power mode.

The reset pin is always enabled as a wake-up source. On the falling edge of $\overline{RST}$, the device will be awaken from sleep mode. The device must remain awake for more than 15 µs in order for the reset to take place.

14.7. Determining the Event that Caused the Last Wakeup

When waking from idle mode, the CPU will vector to the interrupt which caused it to wake up. When waking from stop mode, the RSTSRC register may be read to determine the cause of the last reset.

Upon exit from suspend or sleep mode, the wake-up flags in the PMU0CF register can be read to determine the event which caused the device to wake up. After waking up, the wake-up flags will continue to be updated if any of the wake-up events occur. Wake-up flags are always updated, even if they are not enabled as wake-up sources.

All wake-up flags enabled as wake-up sources in PMU0CF must be cleared before the device can enter suspend or sleep mode. After clearing the wake-up flags, each of the enabled wake-up events should be checked in the individual peripherals to ensure that a wake-up event did not occur while the wake-up flags were being cleared.

SFR Definition 14.1. PMU0CF: Power Management Unit Configuration[1,2]

Bit	7	6	5	4	3	2	1	0
Name	SLEEP	SUSPEND	CLEAR	RSTWK	RTCFWK	RTCAWK	PMATWK	CPT0WK
Type	W	W	W	R	R/W	R/W	R/W	R/W
Reset	0	0	0	Varies	Varies	Varies	Varies	Varies

SFR Page = 0x0; SFR Address = 0xB5

Bit	Name	Description	Write	Read
7	SLEEP	**Sleep Mode Select**	Writing 1 places the device in Sleep Mode.	N/A
6	SUSPEND	**Suspend Mode Select**	Writing 1 places the device in Suspend Mode.	N/A
5	CLEAR	**Wake-up Flag Clear**	Writing 1 clears all wake-up flags.	N/A
4	RSTWK	**Reset Pin Wake-up Flag**	N/A	Set to 1 if a glitch has been detected on $\overline{RST}$.
3	RTCFWK	**SmaRTClock Oscillator Fail Wake-up Source Enable and Flag**	0: Disable wake-up on SmaRTClock Osc. Fail. 1: Enable wake-up on SmaRTClock Osc. Fail.	Set to 1 if the SmaRT-Clock Oscillator has failed.
2	RTCAWK	**SmaRTClock Alarm Wake-up Source Enable and Flag**	0: Disable wake-up on SmaRTClock Alarm. 1: Enable wake-up on SmaRTClock Alarm.	Set to 1 if a SmaRTClock Alarm has occurred.
1	PMATWK	**Port Match Wake-up Source Enable and Flag**	0: Disable wake-up on Port Match Event. 1: Enable wake-up on Port Match Event.	Set to 1 if a Port Match Event has occurred.
0	CPT0WK	**Comparator0 Wake-up Source Enable and Flag**	0: Disable wake-up on Comparator0 rising edge. 1: Enable wake-up on Comparator0 rising edge.	Set to 1 if Comparator0 rising edge caused the last wake-up.

Notes:

1. Read-modify-write operations (ORL, ANL, etc.) should not be used on this register. Wake-up sources must be re-enabled each time the SLEEP or SUSPEND bits are written to 1.
2. The Low Power Internal Oscillator cannot be disabled and the MCU cannot be placed in Suspend or Sleep Mode if any wake-up flags are set to 1. Software should clear all wake-up sources after each reset and after each wake-up from Suspend or Sleep Modes.
3. PMU0 requires two system clocks to update the wake-up source flags after waking from Suspend mode. The wake-up source flags will read ‘0’ during the first two system clocks following the wake from Suspend mode.

SFR Definition 14.2. PMU0MD: Power Management Unit Mode

Bit	7	6	5	4	3	2	1	0
Name	RTCOE	WAKEOE	MONDIS					
Type	R/W	R/W	R/W	R/W	R/W	R/W	R/W	R/W
Reset	0	0	0	0	0	0	0	0

SFR Page = 0xF; SFR Address = 0xB5

Bit	Name	Function
7	RTCOE	**Buffered SmaRTClock Output Enable.** Enables the buffered SmaRTClock oscillator output on P0.2. Only available on ‘F912 and ‘F902 devices. 0: Buffered SmaRTClock output not enabled. 1: Buffered SmaRTClock output not enabled.
6	WAKEOE	**Wakeup Request Output Enable.** Enables the Sleep Mode wake-up request signal on P0.3. Only available on ‘F912 and ‘F902 devices. 0: Wake-up request signal is not enabled. 1: Wake-up request signal is enabled.
5	MONDIS	**VBAT Supply Monitor Disable.** Writing a 1 to this bit disables the VBAT supply monitor. Only available on ‘F912 and ‘F902 devices.
4:0	Unused	**Unused.** Read = 00000b. Write = Don’t Care.

SFR Definition 14.3. PCON: Power Management Control Register

Bit	7	6	5	4	3	2	1	0
Name	GF[5:0]						STOP	IDLE
Type	R/W						W	W
Reset	0	0	0	0	0	0	0	0

SFR Page = All Pages; SFR Address = 0x87

Bit	Name	Description	Write	Read
7:2	GF[5:0]	**General Purpose Flags**	Sets the logic value.	Returns the logic value.
1	STOP	**Stop Mode Select**	Writing 1 places the device in Stop Mode.	N/A
0	IDLE	**Idle Mode Select**	Writing 1 places the device in Idle Mode.	N/A

14.8. Power Management Specifications

See Table 4.5 on page 57 for detailed Power Management Specifications.

15. Cyclic Redundancy Check Unit (CRC0)

C8051F91x-C8051F90x devices include a cyclic redundancy check unit (CRC0) that can perform a CRC using a 16-bit or 32-bit polynomial. CRC0 accepts a stream of 8-bit data written to the CRC0IN register. CRC0 posts the 16-bit or 32-bit result to an internal register. The internal result register may be accessed indirectly using the CRC0PNT bits and CRC0DAT register, as shown in Figure 15.1. CRC0 also has a bit reverse register for quick data manipulation.

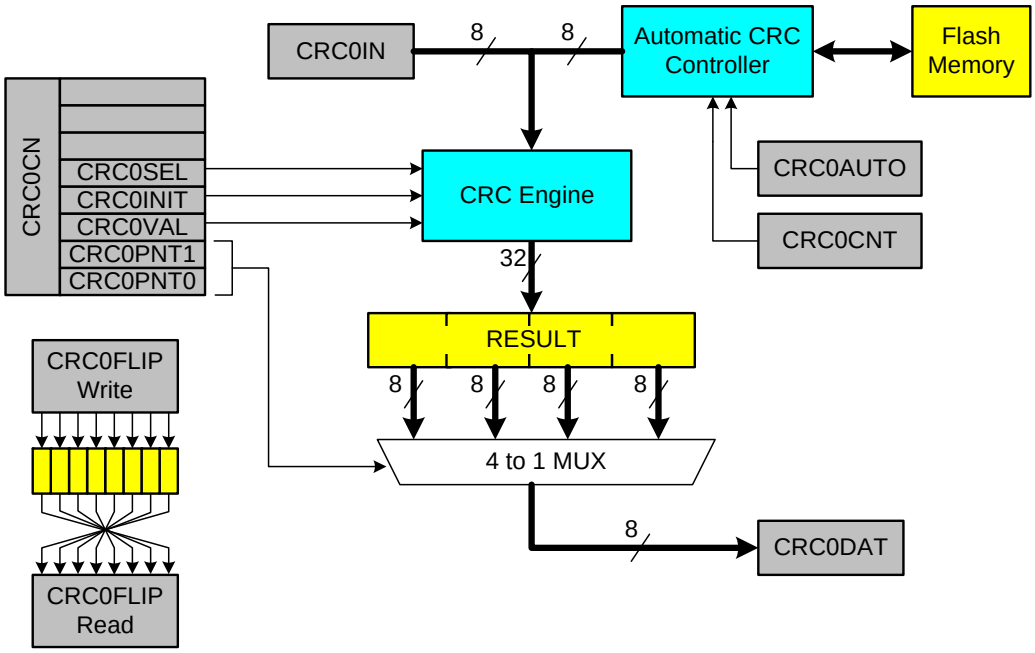

Figure 15.1. CRC0 Block Diagram

15.1. CRC Algorithm

The C8051F91x-C8051F90x CRC unit generates a CRC result equivalent to the following algorithm:

1. XOR the input with the most-significant bits of the current CRC result. If this is the first iteration of the CRC unit, the current CRC result will be the set initial value (0x00000000 or 0xFFFFFFFF).

2a. If the MSB of the CRC result is set, shift the CRC result and XOR the result with the selected polynomial.

2b. If the MSB of the CRC result is not set, shift the CRC result.

Repeat Steps 2a/2b for the number of input bits (8). The algorithm is also described in the following example.

The 16-bit C8051F91x-C8051F90x CRC algorithm can be described by the following code:

```
unsigned short UpdateCRC (unsigned short CRC_acc, unsigned char CRC_input)
{
   unsigned char i;                    // loop counter

   #define POLY 0x1021

   // Create the CRC "dividend" for polynomial arithmetic (binary arithmetic
```

```
   // with no carries)
   CRC_acc = CRC_acc ^ (CRC_input << 8);

   // "Divide" the poly into the dividend using CRC XOR subtraction
   // CRC_acc holds the "remainder" of each divide
   //
   // Only complete this division for 8 bits since input is 1 byte
   for (i = 0; i < 8; i++)
   {
      // Check if the MSB is set (if MSB is 1, then the POLY can "divide"
      // into the "dividend")
      if ((CRC_acc & 0x8000) == 0x8000)
      {
         // if so, shift the CRC value, and XOR "subtract" the poly
         CRC_acc = CRC_acc << 1;
         CRC_acc ^= POLY;
      }
      else
      {
         // if not, just shift the CRC value
         CRC_acc = CRC_acc << 1;
      }
   }

   // Return the final remainder (CRC value)
   return CRC_acc;
}
```

Table 15.1 lists several input values and the associated outputs using the 16-bit C8051F91x-C8051F90x CRC algorithm:

Table 15.1. Example 16-bit CRC Outputs

Input	Output
0x63	0xBD35
0x8C	0xB1F4
0x7D	0x4ECA
0xAA, 0xBB, 0xCC	0x6CF6
0x00, 0x00, 0xAA, 0xBB, 0xCC	0xB166

15.2. Preparing for a CRC Calculation

To prepare CRC0 for a CRC calculation, software should select the desired polynomial and set the initial value of the result. Two polynomials are available: 0x1021 (16-bit) and 0x04C11DB7 (32-bit). The CRC0 result may be initialized to one of two values: 0x00000000 or 0xFFFFFFFF. The following steps can be used to initialize CRC0.

1. Select a polynomial (Set CRC0SEL to 0 for 32-bit or 1 for 16-bit).
2. Select the initial result value (Set CRC0VAL to 0 for 0x00000000 or 1 for 0xFFFFFFFF).
3. Set the result to its initial value (Write 1 to CRC0INIT).

15.3. Performing a CRC Calculation

Once CRC0 is initialized, the input data stream is sequentially written to CRC0IN, one byte at a time. The CRC0 result is automatically updated after each byte is written. The CRC engine may also be configured to automatically perform a CRC on one or more Flash sectors. The following steps can be used to automatically perform a CRC on Flash memory.

1. Prepare CRC0 for a CRC calculation as shown above.
2. Write the index of the starting page to CRC0AUTO.
3. Set the AUTOEN bit in CRC0AUTO.
4. Write the number of Flash sectors to perform in the CRC calculation to CRC0CNT.
   Note: Each Flash sector is 512 bytes on ‘F91x and ‘F90x devices.
5. Write any value to CRC0CN (or OR its contents with 0x00) to initiate the CRC calculation. The CPU will not execute code any additional code until the CRC operation completes. **See the note in SFR Definition 15.1. CRC0CN: CRC0 Control for more information on how to properly initiate a CRC calculation.**
6. Clear the AUTOEN bit in CRC0AUTO.
7. Read the CRC result using the procedure below.

15.4. Accessing the CRC0 Result

The internal CRC0 result is 32-bits (CRC0SEL = 0b) or 16-bits (CRC0SEL = 1b). The CRC0PNT bits select the byte that is targeted by read and write operations on CRC0DAT and increment after each read or write. The calculation result will remain in the internal CR0 result register until it is set, overwritten, or additional data is written to CRC0IN.

SFR Definition 15.1. CRC0CN: CRC0 Control

Bit	7	6	5	4	3	2	1	0
Name				CRC0SEL	CRC0INIT	CRC0VAL	CRC0PNT[1:0]	
Type	R/W	R/W	R/W	R/W	R/W	R/W	R/W	
Reset	0	0	0	0	0	0	0	0

SFR Page = 0xF; SFR Address = 0x92

Bit	Name	Function
7:5	Unused	**Unused.** Read = 000b; Write = Don't Care.
4	CRC0SEL	**CRC0 Polynomial Select Bit.** This bit selects the CRC0 polynomial and result length (32-bit or 16-bit). 0: CRC0 uses the 32-bit polynomial 0x04C11DB7 for calculating the CRC result. 1: CRC0 uses the 16-bit polynomial 0x1021 for calculating the CRC result.
3	CRC0INIT	**CRC0 Result Initialization Bit.** Writing a 1 to this bit initializes the entire CRC result based on CRC0VAL.
2	CRC0VAL	**CRC0 Set Value Initialization Bit.** This bit selects the set value of the CRC result. 0: CRC result is set to 0x00000000 on write of 1 to CRC0INIT. 1: CRC result is set to 0xFFFFFFFF on write of 1 to CRC0INIT.
1:0	CRC0PNT[1:0]	**CRC0 Result Pointer.** Specifies the byte of the CRC result to be read/written on the next access to CRC0DAT. The value of these bits will auto-increment upon each read or write. For CRC0SEL = 0: 00: CRC0DAT accesses bits 7–0 of the 32-bit CRC result. 01: CRC0DAT accesses bits 15–8 of the 32-bit CRC result. 10: CRC0DAT accesses bits 23–16 of the 32-bit CRC result. 11: CRC0DAT accesses bits 31–24 of the 32-bit CRC result. For CRC0SEL = 1: 00: CRC0DAT accesses bits 7–0 of the 16-bit CRC result. 01: CRC0DAT accesses bits 15–8 of the 16-bit CRC result. 10: CRC0DAT accesses bits 7–0 of the 16-bit CRC result. 11: CRC0DAT accesses bits 15–8 of the 16-bit CRC result.

Note: Upon initiation of an automatic CRC calculation, the third opcode byte fetched from program memory is indeterminate. Therefore, writes to CRC0CN that initiate a CRC operation must be immediately followed by a benign 3-byte instruction whose third byte is a don't care. An example of such an instruction is a 3-byte MOV that targets the CRC0FLIP register. When programming in 'C', the dummy value written to CRC0FLIP should be a non-zero value to prevent the compiler from generating a 2-byte MOV instruction.

SFR Definition 15.2. CRC0IN: CRC0 Data Input

Bit	7	6	5	4	3	2	1	0
Name	CRC0IN[7:0]							
Type	R/W							
Reset	0	0	0	0	0	0	0	0

SFR Page = 0xF; SFR Address = 0x93

Bit	Name	Function
7:0	CRC0IN[7:0]	**CRC0 Data Input.** Each write to CRC0IN results in the written data being computed into the existing CRC result according to the CRC algorithm described in Section 15.1

SFR Definition 15.3. CRC0DAT: CRC0 Data Output

Bit	7	6	5	4	3	2	1	0
Name	CRC0DAT[7:0]							
Type	R/W							
Reset	0	0	0	0	0	0	0	0

SFR Page = 0xF; SFR Address = 0x91

Bit	Name	Function
7:0	CRC0DAT[7:0]	**CRC0 Data Output.** Each read or write performed on CRC0DAT targets the CRC result bits pointed to by the CRC0 Result Pointer (CRC0PNT bits in CRC0CN).

SFR Definition 15.4. CRC0AUTO: CRC0 Automatic Control

Bit	7	6	5	4	3	2	1	0
Name	AUTOEN	CRCDONE	CRC0ST[5:0]					
Type	R/W							R/W
Reset	0	1	0	0	0	0	0	0

SFR Page = 0xF; SFR Address = 0x96

Bit	Name	Function
7	AUTOEN	**Automatic CRC Calculation Enable.** When AUTOEN is set to 1, any write to CRC0CN will initiate an automatic CRC starting at Flash sector CRC0ST and continuing for CRC0CNT sectors.
6	CRCDONE	**CRCDONE Automatic CRC Calculation Complete.** Set to 0 when a CRC calculation is in progress. Code execution is stopped during a CRC calculation; therefore, reads from firmware will always return 1.
5:0	CRC0ST[5:0]	**Automatic CRC Calculation Starting Flash Sector.** These bits specify the Flash sector to start the automatic CRC calculation. The starting address of the first Flash sector included in the automatic CRC calculation is CRC0ST x Page Size. **Note:** ‘F91x and ‘F90x devices have a page size of 512 bytes.

SFR Definition 15.5. CRC0CNT: CRC0 Automatic Flash Sector Count

Bit	7	6	5	4	3	2	1	0
Name			CRC0CNT[5:0]					
Type	R/W							R/W
Reset	0	0	0	0	0	0	0	0

SFR Page = 0xF; SFR Address = 0x97

Bit	Name	Function
7:6	Unused	**Unused.** Read = 00b; Write = Don't Care.
5:0	CRC0CNT[5:0]	**Automatic CRC Calculation Flash Sector Count.** These bits specify the number of Flash sectors to include in an automatic CRC calculation. The starting address of the last Flash sector included in the automatic CRC calculation is (CRC0ST+CRC0CNT) x Page Size. **Note:** 'F91x and 'F90x devices have a page size of 512 bytes.

15.5. CRC0 Bit Reverse Feature

CRC0 includes hardware to reverse the bit order of each bit in a byte as shown in Figure 15.2. Each byte of data written to CRC0FLIP is read back bit reversed. For example, if 0xC0 is written to CRC0FLIP, the data read back is 0x03. Bit reversal is a useful mathematical function used in algorithms such as the FFT.

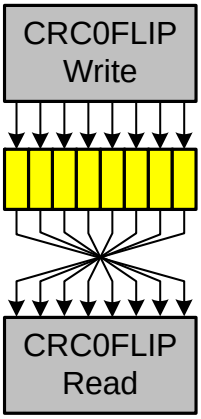

Figure 15.2. Bit Reverse Register

SFR Definition 15.6. CRC0FLIP: CRC0 Bit Flip

Bit	7	6	5	4	3	2	1	0
Name	CRC0FLIP[7:0]							
Type	R/W							
Reset	0	0	0	0	0	0	0	0

SFR Page = 0xF; SFR Address = 0x95

Bit	Name	Function
7:0	CRC0FLIP[7:0]	**CRC0 Bit Flip.** Any byte written to CRC0FLIP is read back in a bit-reversed order, i.e. the written LSB becomes the MSB. For example: If 0xC0 is written to CRC0FLIP, the data read back will be 0x03. If 0x05 is written to CRC0FLIP, the data read back will be 0xA0.

16. On-Chip DC-DC Converter (DC0)

C8051F91x-C8051F90x devices include an on-chip dc-dc converter to allow operation from a single cell battery with a supply voltage as low as 0.9 V. The dc-dc converter is a switching boost converter with an input voltage range of 0.9 to 1.8 V (C8051F911/01) or 3.6 V (C8051F912/11) and a programmable output voltage range of 1.8 to 3.3 V. The default output voltage is 1.9 V when the input is less than 1.9 V. Since the dc-dc converter uses a boost architecture, the output voltage will always be greater than or equal to the input voltage. The dc-dc converter can supply the system with up to 65 mW of regulated power (or up to 100 mW in some applications) and can be used for powering other devices in the system. This allows the most flexibility when interfacing to sensors and other analog signals which typically require a higher supply voltage than a single-cell battery can provide.

Figure 16.1 shows a block diagram of the dc-dc converter. During normal operation in the first half of the switching cycle, the Duty Cycle Control switch is closed and the Diode Bypass switch is open. Since the output voltage is higher than the voltage at the DCEN pin, no current flows through the diode and the load is powered from the output capacitor. During this stage, the DCEN pin is connected to ground through the Duty Cycle Control switch, generating a positive voltage across the inductor and forcing its current to ramp up.

In the second half of the switching cycle, the Duty Cycle control switch is opened and the Diode Bypass switch is closed. This connects DCEN directly to VDD/DC+ and forces the inductor current to charge the output capacitor. Once the inductor transfers its stored energy to the output capacitor, the Duty Cycle Control switch is closed, the Diode Bypass switch is opened, and the cycle repeats.

The dc-dc converter has a built in voltage reference and oscillator, and will automatically limit or turn off the switching activity in case the peak inductor current rises beyond a safe limit or the output voltage rises above the programmed target value. This allows the dc-dc converter output to be safely overdriven by a secondary power source (when available) in order to preserve battery life. The dc-dc converter's settings can be modified using SFR registers which provide the ability to change the target output voltage, oscillator frequency or source, Diode Bypass switch resistance, peak inductor current, and minimum duty cycle.

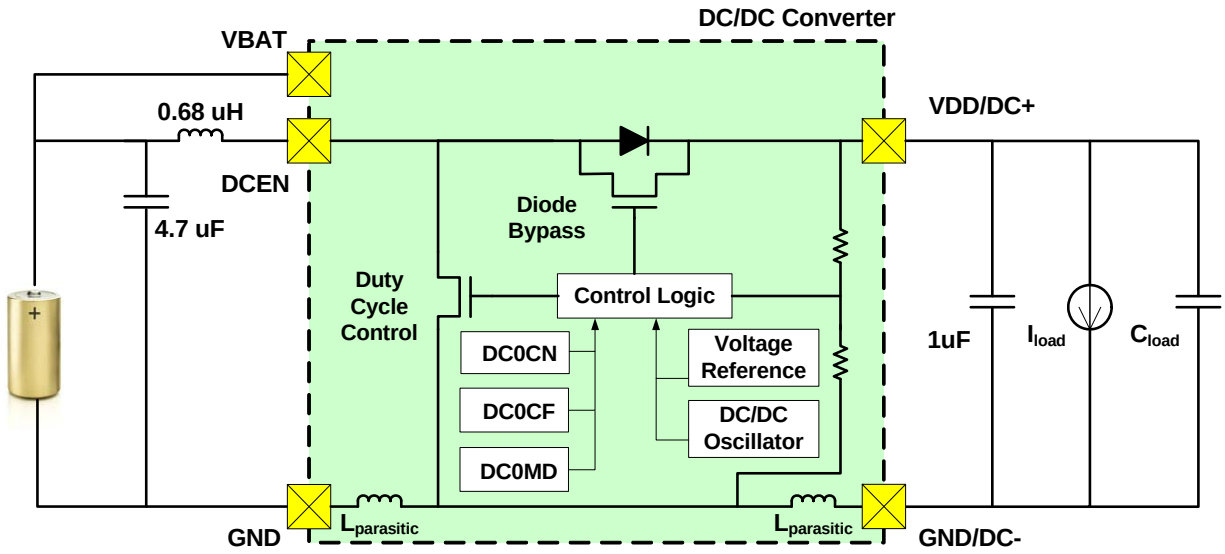

Figure 16.1. DC-DC Converter Block Diagram

16.1. Startup Behavior

On initial power-on, the dc-dc converter outputs a constant 50% duty cycle until there is sufficient voltage on the output capacitor to maintain regulation. The size of the output capacitor and the amount of load current present during startup will determine the length of time it takes to charge the output capacitor.

During initial power-on reset, the maximum peak inductor current threshold, which triggers the overcurrent protection circuit, is set to approximately 125 mA. This generates a “soft-start” to limit the output voltage slew rate and prevent excessive in-rush current at the output capacitor. In order to ensure reliable startup of the dc-dc converter, the following restrictions have been imposed:

- The maximum dc load current allowed during startup is given in Table 4.16 on page 64. If the dc-dc converter is powering external sensors or devices through the VDD/DC+ pin or through GPIO pins, then the current supplied to these sensors or devices is counted towards this limit. The in-rush current into capacitors does not count towards this limit.
- The maximum total output capacitance is given in Table 4.16 on page 64. This value includes the required 1 µF ceramic output capacitor and any additional capacitance connected to the VDD/DC+ pin.

Once initial power-on is complete, the peak inductor current limit can be increased by software as shown in Table 16.1. Limiting the peak inductor current can allow the device to start up near the battery’s end of life.
.

Table 16.1. IPeak Inductor Current Limit Settings

SWSEL	ILIMIT	Peak Current (mA) Normal Power Mode	Peak Current (mA) Low Power Mode
1	0	100	75
0	0	125	100
1	1	250	125
0	1	500	250

The peak inductor current is dependent on several factors including the dc load current and can be estimated using following equation:

$$I_{PK} = \frac{2\ I_{LOAD}(VDD/DC+ - VBAT)}{efficiency \times inductance \times frequency}$$

efficiency = 0.80

inductance = 0.68 µH

frequency = 2.4 MHz

16.2. High Power Applications

The dc-dc converter is designed to provide the system with 65 mW of output power, however, it can safely provide up to 100 mW of output power without any risk of damage to the device. For high power applications, the system should be carefully designed to prevent unwanted VBAT and VDD/DC+ Supply Monitor resets, which are more likely to occur when the dc-dc converter output power exceeds 65mW. In addition, output power above 65 mW causes the dc-dc converter to have relaxed output regulation, high output ripple and more analog noise. At high output power, an inductor with low DC resistance should be chosen in order to minimize power loss and maximize efficiency.

The combination of high output power and low input voltage will result in very high peak and average inductor currents. If the power supply has a high internal resistance, the transient voltage on the VBAT terminal could drop below 0.9 V and trigger a VBAT Supply Monitor Reset, even if the open-circuit voltage is well above the 0.9 V threshold. While this problem is most often associated with operation from very small batteries or batteries that are near the end of their useful life, it can also occur when using bench power supplies that have a slow transient response; the supply's display may indicate a voltage above 0.9 V, but the minimum voltage on the VBAT pin may be lower. A similar problem can occur at the output of the dc-dc converter: using the default low current limit setting (125 mA) can trigger V_{DD} Supply Monitor resets if there is a high transient load current, particularly if the programmed output voltage is at or near 1.8 V.

16.3. Pulse Skipping Mode

The dc-dc converter allows the user to set the minimum pulse width such that if the duty cycle needs to decrease below a certain width in order to maintain regulation, an entire "clock pulse" will be skipped.

Pulse skipping can provide substantial power savings, particularly at low values of load current. The converter will continue to maintain a minimum output voltage at its programmed value when pulse skipping is employed, though the output voltage ripple can be higher. Another consideration is that the dc-dc will operate with pulse-frequency modulation rather than pulse-width modulation, which makes the switching frequency spectrum less predictable; this could be an issue if the dc-dc converter is used to power a radio. Figure 4.5 and Figure 4.6 on page 49 and 50 show the effect of pulse skipping on power consumption.

16.4. Enabling the DC-DC Converter

On power-on reset, the state of the DCEN pin is sampled to determine if the device will power up in one-cell or two-cell mode. In two-cell mode, the dc-dc converter always remains disabled. In one-cell mode, the dc-dc converter remains disabled in Sleep Mode, and enabled in all other power modes. See Section "14. Power Management" on page 149 for complete details on available power modes.

The dc-dc converter is enabled (one-cell mode) in hardware by placing a 0.68 µH inductor between DCEN and VBAT. The dc-dc converter is disabled (two-cell mode) by shorting DCEN directly to GND. The DCEN pin should never be left floating. The device can only switch between one-cell and two-cell mode during a power-on reset. See Section "18. Reset Sources" on page 178 for more information regarding reset behavior.

Figure 16.2 shows the two dc-dc converter configuration options.

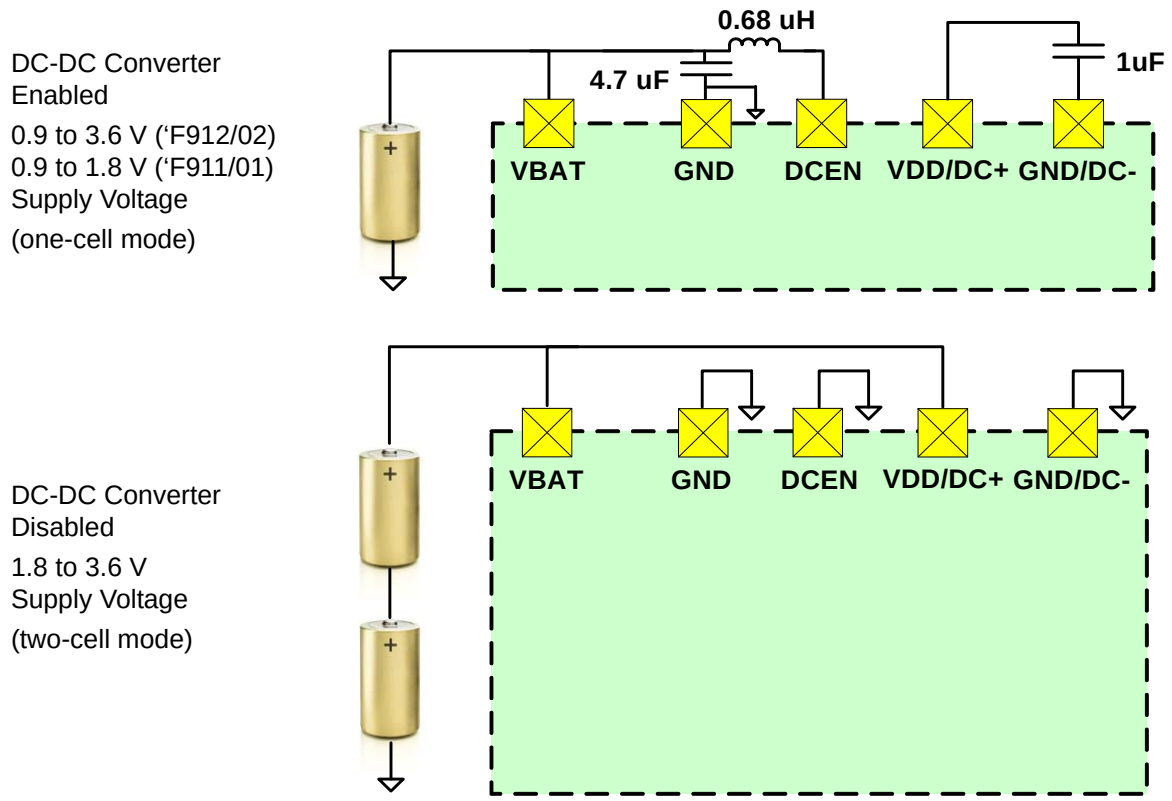

Figure 16.2. DC-DC Converter Configuration Options

When the dc-dc converter "Enabled" configuration (one-cell mode) is chosen, the following guidelines apply:

- In most cases, the GND/DC– pin should not be externally connected to GND.
- The 0.68 µH inductor should be placed as close as possible to the DCEN pin for maximum efficiency.
- The 4.7 µF capacitor should be placed as close as possible to the inductor.
- The current loop including GND, the 4.7 µF capacitor, the 0.68 µH inductor and the DCEN pin should be made as short as possible.
- The PCB traces connecting VDD/DC+ to the output capacitor and the output capacitor to GND/DC– should be as short and as thick as possible in order to minimize parasitic inductance.

16.5. Minimizing Power Supply Noise

To minimize noise on the power supply lines, the GND and GND/DC- pins should be kept separate, as shown in Figure 16.2; one or the other should be connected to the pc board ground plane. For applications in which the dc-dc converter is used only to power internal circuits, the GND pin is normally connected to the board ground.

The large decoupling capacitors in the input and output circuits ensure that each supply is relatively quiet with respect to its own ground. However, connecting a circuit element "diagonally" (e.g. connecting an external chip between VDD/DC+ and GND, or between VBAT and GND/DC-) can result in high supply noise across that circuit element. For applications in which the dc-dc converter is used to power external analog circuitry, it is recommended to connect the GND/DC– pin to the board ground and connect the battery's negative terminal to the GND pin only, which is not connected to board ground.

To accommodate situations in which ADC0 is sampling a signal that is referenced to one of the external grounds, we recommend using the Analog Ground Reference (P0.1/AGND) option described in Section 5.12. This option prevents any voltage differences between the internal chip ground and the external grounds from modulating the ADC input signal. If this option is enabled, the P0.1 pin should be tied to the ground reference of the external analog input signal. When using the ADC with the dc-dc converter, we also recommend enabling the SYNC bit in the DC0CN register to minimize interference.

These general guidelines provide the best performance in most applications, though some situations may benefit from experimentation to eliminate any residual noise issues. Examples might include tying the grounds together, using additional low-inductance decoupling caps in parallel with the recommended ones, investigating the effects of different dc-dc converter settings, etc.

16.6. Selecting the Optimum Switch Size

The dc-dc converter has two built-in switches (the diode bypass switch and duty cycle control switch). To maximize efficiency, one of two switch sizes may be selected. The large switches are ideal for carrying high currents and the small switches are ideal for low current applications. The ideal switchover point to switch from the small switches to the large switches varies with the programmed output voltage. At an output voltage of 2 V, the ideal switchover point is at approximately 4 mA total output current. At an output voltage of 3 V, the ideal switchover point is at approximately 8 mA total output current.

16.7. DC-DC Converter Clocking Options

The dc-dc converter may be clocked from its internal oscillator, or from any system clock source, selectable by the CLKSEL bit (DC0CF.0). The dc-dc converter internal oscillator frequency is approximately 2.4 MHz. For a more accurate clock source, the system clock, or a divided version of the system clock may be used as the dc-dc clock source. The dc-dc converter has a built in clock divider (configured using DC0CF[6:5]) which allows any system clock frequency over 1.6 MHz to generate a valid clock in the range of 1.6 to 3.2 MHz.

When the precision internal oscillator is selected as the system clock source, the OSCICL register may be used to fine tune the oscillator frequency and the dc-dc converter clock. The oscillator frequency should only be decreased since it is factory calibrated at its maximum frequency. The minimum frequency which can be reached by the oscillator after taking into account process variations is approximately 16 MHz. The system clock routed to the dc-dc converter clock divider also may be inverted by setting the CLKINV bit (DC0CF.3) to logic 1. These options can be used to minimize interference in noise sensitive applications.

16.8. DC-DC Converter Behavior in Sleep Mode

When the C8051F91x-C8051F90x devices are placed in Sleep mode, the dc-dc converter is disabled, and the VDD/DC+ output is internally connected to VBAT by default. This behavior ensures that the GPIO pins are powered from a low-impedance source during sleep mode. If the GPIO pins are not used as inputs or

outputs during sleep mode, then the VDD/DC+ output can be made to float during Sleep mode by setting the VDDSLP bit in the DC0CF register to 1.

Setting this bit can provide power savings in two ways. First, if the sleep interval is relatively short and the VDD/DC+ load current (include leakage currents) is negligible, then the capacitor on VDD/DC+ will maintain the output voltage near the programmed value, which means that the VDD/DC+ capacitor will not need to be recharged upon every wake up event. The second power advantage is that internal or external low-power circuits that require more than 1.8 V can continue to function during Sleep mode without operating the dc-dc converter, powered by the energy stored in the 1 µF output decoupling capacitor. For example, the C8051F91x-C8051F90x comparators require about 0.4 µA when operating in their lowest power mode. If the dc-dc converter output were increased to 3.3 V just before putting the device into Sleep mode, then the comparator could be powered for more than 3 seconds before the output voltage dropped to 1.8 V. In this example, the overall energy consumption would be much lower than if the dc-dc converter were kept running to power the comparator.

If the load current on VDD/DC+ is high enough to discharge the VDD/DC+ capacitance to a voltage lower than VBAT during the sleep interval, an internal diode will prevent VDD/DC+ from dropping more than a few hundred millivolts below VBAT. There may be some additional leakage current from VBAT to ground when the VDD/DC+ level falls below VBAT, but this leakage current should be small compared to the current from VDD/DC+.

The amount of time that it takes for a device configured in one-cell mode to wake up from Sleep mode depends on a number of factors, including the dc-dc converter clock speed, the settings of the SWSEL, ILIMIT, and LPEN bits, the battery internal resistance, the load current, and the difference between the VBAT voltage level and the programmed output voltage. The wake up time can be as short as 2 µs, though it is more commonly in the range of 5 to 10 µs, and it can exceed 50 µs under extreme conditions.

See Section “14. Power Management” on page 149 for more information about sleep mode.

16.9. Bypass Mode (C8051F912/02 only)

During normal operation, if the dc-dc converter input voltage exceeds the programmed output voltage, the converter will stop switching and the Diode Bypass switch will remain in the “on” state. The output voltage will be equal to the input voltage minus any resistive loss in the switch and all of the converter’s analog circuits will remain biased. The bypass feature automatically shuts off the dc-dc converter when the input voltage is greater than the programmed output voltage by 150 mV. In bypass, the Diode Bypass switch and dc-dc converter bias currents are disabled except for the voltage comparison circuitry (~ 3 µA, depending on the configuration settings in the DC0MD register). If the input voltage drops within 50 mV of the programmed output value, then the dc-dc converter automatically starts operating in the normal state. There is 100 mV voltage hysteresis built in the bypass comparator to enhance stability.

The bypass mode increases system operating time in systems which have a minimum operating voltage higher than the battery end of life voltage. For instance, if an external chip requires a minimum supply voltage of 2.7 V and a lithium coin cell battery is used as power source (end-of-life voltage is approximately 2 V), then the C8051F912/902’s dc-dc converter could be configured for an output voltage of 2.7 V with bypass mode enabled. The dc-dc converter would be bypassed when the battery was fresh, but as soon as the battery voltage dropped below 2.75 V, the dc-dc converter would turn on to ensure that the external chip was provided with a minimum of 2.7 V for the remainder of the battery life.

16.10. Low Power Mode (C8051F912/02 only)

Setting the LPEN bit in the DC0CF register will enable a Low Power Mode for the dc-dc converter. In Low Power Mode, the bias currents are substantially reduced, which can lead to an efficiency improvement with light load currents (generally less than a few mA). The drawback to this mode is that the response time of the converter’s analog blocks is increased; larger delay in the circuits controlling the Diode Bypass switch can lead to loss of efficiency at medium and high load currents due to reverse leakage in the switch. The Low power mode also reduces the peak inductor current limit as shown in Table 16.1.

16.11. Passive Diode Mode (C8051F912/02 only)

Setting the EXTDEN bit in DC0MD enables the Passive Diode Mode. In this mode, the control circuits for the Diode Bypass switch are disabled, which reduces the converter's quiescent operating current. An external Schottky diode may be connected between the DCEN (anode) and VDD/DC+ (cathode) pins. Under light load conditions, an external diode is typically not required. There are two situations in which this mode can prove beneficial. First is with very light load currents, where the efficiency is dominated by the converter's quiescent current. The converter will use an internal p-n junction diode to transfer current from the inductor to the output capacitor; although there is a larger voltage drop (and power loss) across a passive diode, the overall efficiency may be improved due to the reduction in quiescent current. The second situation is when output power is very high. In that case, efficiency can suffer because some reverse current can flow in the Diode Bypass switch before the control circuitry turns the switch off. Putting the device in Passive Diode Mode and optionally connecting an external Schottky diode between the DCEN and VDD/DC+ pins (parallel to the internal diode) may provide higher efficiency in some applications than using the internal Diode Bypass switch.

16.12. DC-DC Converter Register Descriptions

The SFRs used to configure the dc-dc converter are described in the following register descriptions. The reset values for these registers can be used as-is in most systems; therefore, no software intervention or initialization is required.

SFR Definition 16.1. DC0CN: DC-DC Converter Control

Bit	7	6	5	4	3	2	1	0
Name	MINPW		SWSEL	Reserved	SYNC	VSEL		
Type	R/W		R/W	R/W	R/W	R/W		
Reset	0	0	1	0	0	0	0	1

SFR Page = 0x0; SFR Address = 0x97

Bit	Name	Function
7:6	MINPW[1:0]	**DC-DC Converter Minimum Pulse Width.** Specifies the minimum pulse width. 00: No minimum duty cycle. 01: Minimum pulse width is 20 ns. 10: Minimum pulse width is 40 ns. 11: Minimum pulse width is 80 ns.
5	SWSEL	**DC-DC Converter Switch Select.** Selects one of two possible converter switch sizes to maximize efficiency. 0: The large switches are selected (best efficiency for high output currents). 1: The small switches are selected (best efficiency for low output currents).
4	Reserved	Reserved. Always Write to 0.
3	SYNC	**ADC0 Synchronization Enable.** When synchronization is enabled, the ADC0SC[4:0] bits in the ADC0CF register must be set to 00000b. 0: The ADC is not synchronized to the dc-dc converter. 1: The ADC is synchronized to the dc-dc converter. ADC0 tracking is performed during the longest quiet time of the dc-dc converter switching cycle and ADC0 SAR clock is also synchronized to the dc-dc converter switching cycle.
2:0	VSEL[2:0]	**DC-DC Converter Output Voltage Select.** Specifies the target output voltage. 000: Target output voltage is 1.8 V. 001: Target output voltage is 1.9 V. 010: Target output voltage is 2.0 V. 011: Target output voltage is 2.1 V. 100: Target output voltage is 2.4 V. 101: Target output voltage is 2.7 V. 110: Target output voltage is 3.0 V. 111: Target output voltage is 3.3 V.

SFR Definition 16.2. DC0CF: DC-DC Converter Configuration

Bit	7	6	5	4	3	2	1	0
Name	LPEN	CLKDIV[1:0]		AD0CKINV	CLKINV	ILIMIT	VDDSLP	CLKSEL
Type	R/W	R/W	R/W	R/W	R/W	R/W	R/W	R/W
Reset	0	0	0	0	0	0	0	0

SFR Page = 0x0; SFR Address = 0x96

Bit	Name	Function
7	LPEN	**Low Power Mode Enable.** Enables the dc-dc low power mode which reduces bias currents, reduces peak inductor current, and increases efficiency for low load currents. Only available on ‘F912 and ‘F902 devices. 0: Low Power Mode Disabled. 1: Low Power Mode Enabled.
6:5	CLKDIV[1:0]	**DC-DC Clock Divider.** Divides the dc-dc converter clock when the system clock is selected as the clock source for dc-dc converter. These bits are ignored when the dc-dc converter is clocked from its local oscillator. 00: The dc-dc converter clock is system clock divided by 1. 01: The dc-dc converter clock is system clock divided by 2. 10: The dc-dc converter clock is system clock divided by 4. 11: The dc-dc converter clock is system clock divided by 8.
4	AD0CKINV	**ADC0 Clock Inversion (Clock Invert During Sync).** Inverts the ADC0 SAR clock derived from the dc-dc converter clock when the SYNC bit (DC0CN.3) is enabled. This bit is ignored when the SYNC bit is set to zero. 0: ADC0 SAR clock is inverted. 1: ADC0 SAR clock is not inverted.
3	CLKINV	**DC-DC Converter Clock Invert.** Inverts the system clock used as the input to the dc-dc clock divider. 0: The dc-dc converter clock is not inverted. 1: The dc-dc converter clock is inverted.
2	ILIMIT	**Peak Current Limit Threshold.** Sets the threshold for the maximum allowed peak inductor current according to Table 16.1.
1	VDDSLP	**VDD-DC+ Sleep Mode Connection.** Specifies the power source for VDD/DC+ in Sleep Mode when the dc-dc converter is enabled. 0: VDD-DC+ connected to VBAT in Sleep Mode. 1: VDD-DC+ is floating in Sleep Mode.
0	CLKSEL	**DC-DC Converter Clock Source Select.** Specifies the dc-dc converter clock source. 0: The dc-dc converter is clocked from its local oscillator. 1: The dc-dc converter is clocked from the system clock.

SFR Definition 16.3. DC0MD: DC-DC Mode

Bit	7	6	5	4	3	2	1	0
Name					BYPFLG	BYPSEL[1:0]		PASDEN
Type	R/W	R/W	R/W	R/W	R	R/W		R/W
Reset	0	0	0	0	Varies	0	0	0

SFR Page = 0xF; SFR Address = 0x94

Bit	Name	Function
7:4	Unused	**Unused.** Read = 0000b, Write = don't care.
3	BYPFLG	**Bypass Indicator.** Indicates when the dc-dc converter is operating in bypass mode. Only available on 'F912 and 'F902 devices. 0: DC0 is not operating in bypass mode. 1: DC0 is operating in bypass mode.
2:1	BYPSEL[1:0]	**Bypass Mode Select.** Selects the bypass settings. Only available on 'F912 and 'F902 devices. 00: Bypass mode disabled (highest supply current when the input voltage exceeds the programmed output voltage). 01: Bypass enabled (auto switch), dc-dc oscillator enabled (fast response time) 10: Bypass enabled (auto switch), dc-dc oscillator disabled (reduced supply current) 11: The dc-dc converter is forced into bypass mode (lowest supply current when the input voltage exceeds the programmed output voltage).
0	PASDEN	**Passive Diode Mode Enable.** Passive external diode mode. Only available on 'F912 and 'F902 devices. 0: Passive diode mode disabled. 1: Passive diode mode enabled.

16.13. DC-DC Converter Specifications

See Table 4.16 on page 64 for a detailed listing of dc-dc converter specifications.

17. Voltage Regulator (VREG0)

C8051F91x-C8051F90x devices include an internal voltage regulator (VREG0) to regulate the internal core supply to 1.8 V from a VDD/DC+ supply of 1.8 to 3.6 V. Electrical characteristics for the on-chip regulator are specified in the Electrical Specifications chapter.

The REG0CN register allows the Precision Oscillator Bias to be disabled, reducing supply current in all non-Sleep power modes. This bias should only be disabled when the precision oscillator is not being used.

The internal regulator (VREG0) is disabled when the device enters Sleep Mode and remains enabled when the device enters Suspend Mode. See Section “14. Power Management” on page 149 for complete details about low power modes.

SFR Definition 17.1. REG0CN: Voltage Regulator Control

Bit	7	6	5	4	3	2	1	0
Name		Reserved	Reserved	OSCBIAS				Reserved
Type	R	R/W	R/W	R/W	R	R	R	R/W
Reset	0	0	0	1	0	0	0	0

SFR Page = 0x0; SFR Address = 0xC9

Bit	Name	Function
7	Unused	**Unused.** Read = 0b. Write = Don’t care.
6	Reserved	**Reserved.** Read = 0b. Must Write 0b.
5	Reserved	**Reserved.** Read = 0b. Must Write 0b.
4	OSCBIAS	**Precision Oscillator Bias.** When set to 1, the bias used by the precision oscillator is forced on. If the precision oscillator is not being used, this bit may be cleared to 0 to save approximately 80 µA of supply current in all non-Sleep power modes. If disabled then re-enabled, the precision oscillator bias requires 4 µs of settling time.
3:1	Unused	**Unused.** Read = 000b. Write = Don’t care.
0	Reserved	**Reserved.** Read = 0b. Must Write 0b.

17.1. Voltage Regulator Electrical Specifications

See Table 4.15 on page 63 for detailed Voltage Regulator Electrical Specifications.

18. Reset Sources

Reset circuitry allows the controller to be easily placed in a predefined default condition. On entry to this reset state, the following occur:

- CIP-51 halts program execution
- Special Function Registers (SFRs) are initialized to their defined reset values
- External Port pins are forced to a known state
- Interrupts and timers are disabled

All SFRs are reset to the predefined values noted in the SFR descriptions. The contents of RAM are unaffected during a reset; any previously stored data is preserved as long as power is not lost. Since the stack pointer SFR is reset, the stack is effectively lost, even though the data on the stack is not altered.

The Port I/O latches are reset to 0xFF (all logic ones) in open-drain mode. Weak pullups are enabled during and after the reset. For V_{DD} Monitor and power-on resets, the $\overline{RST}$ pin is driven low until the device exits the reset state.

On exit from the reset state, the program counter (PC) is reset, and the system clock defaults to an internal oscillator. Refer to Section “19. Clocking Sources” on page 186 for information on selecting and configuring the system clock source. The Watchdog Timer is enabled with the system clock divided by 12 as its clock source (Section “26.4. Watchdog Timer Mode” on page 313 details the use of the Watchdog Timer). Program execution begins at location 0x0000.

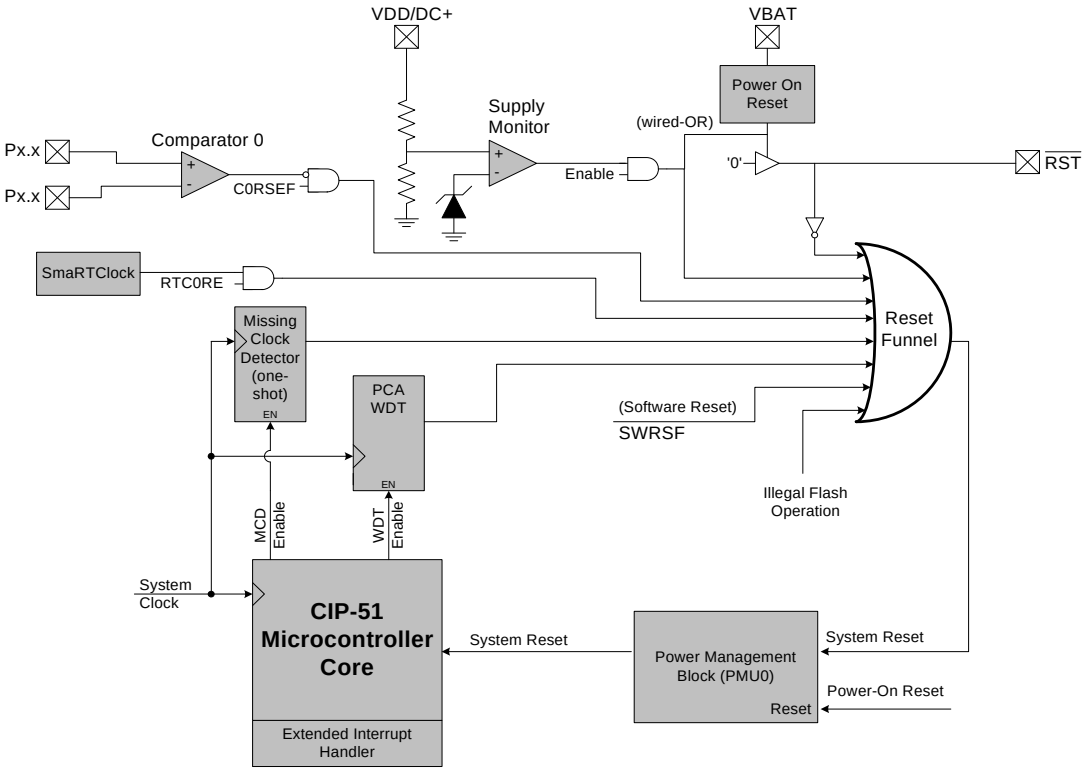

Figure 18.1. Reset Sources

18.1. Power-On (VBAT Supply Monitor) Reset

During power-up, the device is held in a reset state and the $\overline{RST}$ pin is driven low until V_{BAT} settles above V_{POR}. An additional delay occurs before the device is released from reset; the delay decreases as the V_{BAT} ramp time increases (V_{BAT} ramp time is defined as how fast V_{BAT} ramps from 0 V to V_{POR}). Figure 18.3 plots the power-on and V_{DD} monitor reset timing. For valid ramp times (less than 3 ms), the power-on reset delay ($T_{PORDelay}$) is typically 3 ms (V_{BAT} = 0.9 V), 7 ms (V_{BAT} = 1.8 V), or 15 ms (V_{BAT} = 3.6 V).

Note: The maximum V_{DD} ramp time is 3 ms; slower ramp times may cause the device to be released from reset before V_{BAT} reaches the V_{POR} level.

On exit from a power-on reset, the PORSF flag (RSTSRC.1) is set by hardware to logic 1. When PORSF is set, all of the other reset flags in the RSTSRC Register are indeterminate (PORSF is cleared by all other resets). Since all resets cause program execution to begin at the same location (0x0000), software can read the PORSF flag to determine if a power-up was the cause of reset. The contents of internal data memory should be assumed to be undefined after a power-on reset.

On ‘F912 and ‘F902 devices, the VBAT supply monitor can be disabled to save power by writing ‘1’ to the MONDIS (PMU0MD.5) bit. When the VBAT supply monitor is disabled, all reset sources will trigger a full POR and will re-enable the VBAT supply monitor.

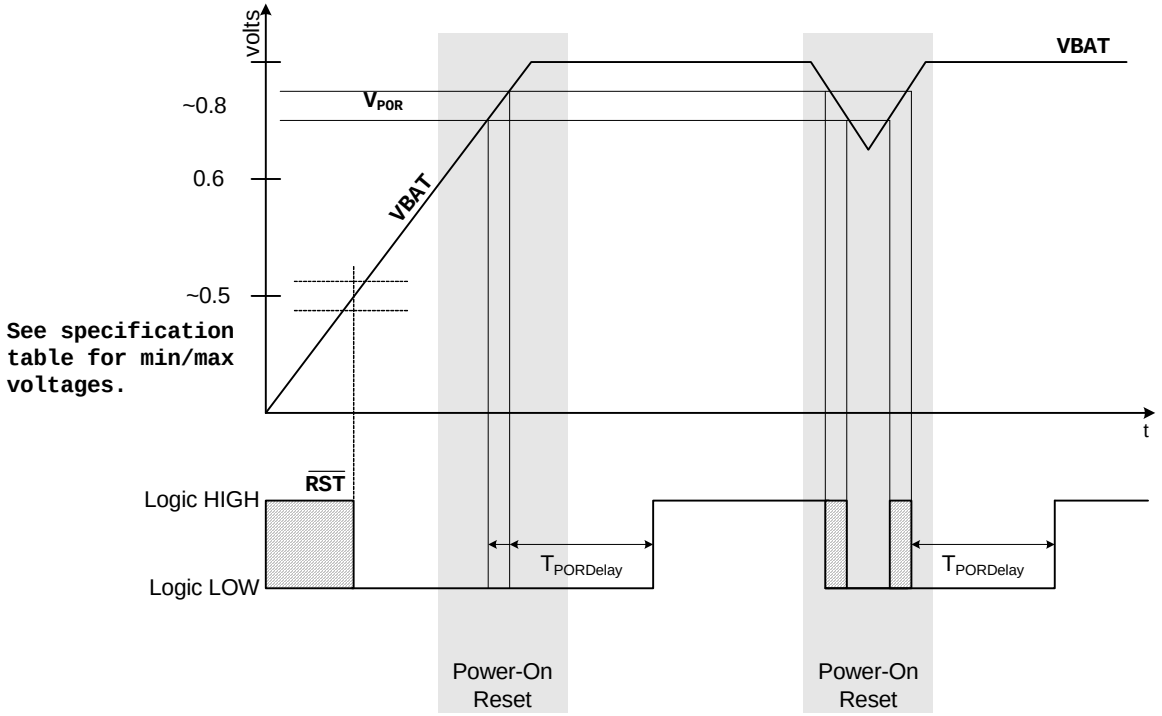

Figure 18.2. Power-Fail Reset Timing Diagram

18.2. Power-Fail (VDD/DC+ Supply Monitor) Reset

C8051F91x-C8051F90x devices have a VDD/DC+ Supply Monitor that is enabled and selected as a reset source after each power-on or power-fail reset. When enabled and selected as a reset source, any power down transition or power irregularity that causes VDD/DC+ to drop below V_{RST} will cause the $\overline{RST}$ pin to be driven low and the CIP-51 will be held in a reset state (see Figure 18.3). When VDD/DC+ returns to a level above V_{RST}, the CIP-51 will be released from the reset state.

After a power-fail reset, the PORSF flag reads 1, the contents of RAM invalid, and the VDD/DC+ supply monitor is enabled and selected as a reset source. The enable state of the VDD/DC+ supply monitor and its selection as a reset source is only altered by power-on and power-fail resets. For example, if the VDD/DC+ supply monitor is de-selected as a reset source and disabled by software, then a software reset is performed, the VDD/DC+ supply monitor will remain disabled and de-selected after the reset.

In battery-operated systems, the contents of RAM can be preserved near the end of the battery's usable life if the device is placed in Sleep Mode prior to a power-fail reset occurring. When the device is in Sleep Mode, the power-fail reset is automatically disabled and the contents of RAM are preserved as long as the VBAT supply does not fall below V_{POR}. A large capacitor can be used to hold the power supply voltage above V_{POR} while the user is replacing the battery. Upon waking from Sleep mode, the enable and reset source select state of the VDD/DC+ supply monitor are restored to the value last set by the user.

To allow software early notification that a power failure is about to occur, the VDDOK bit is cleared when the VDD/DC+ supply falls below the V_{WARN} threshold. The VDDOK bit can be configured to generate an interrupt. See Section "12. Interrupt Handler" on page 126 for more details.

Important Note: To protect the integrity of Flash contents, **the VDD/DC+ supply monitor must be enabled and selected as a reset source if software contains routines which erase or write Flash memory.** If the VDD/DC+ supply monitor is not enabled, any erase or write performed on Flash memory will cause a Flash Error device reset.

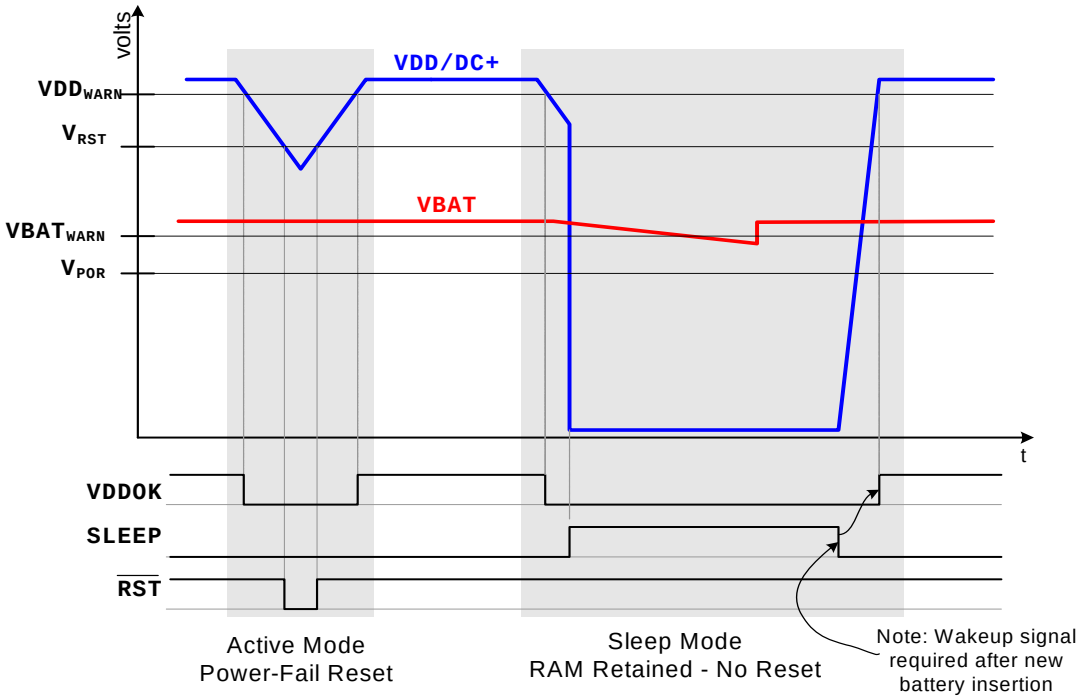

Figure 18.3. Power-Fail Reset Timing Diagram

Important Notes:

- The Power-on Reset (POR) delay is not incurred after a VDD/DC+ supply monitor reset. See Section “4. Electrical Characteristics” on page 40 for complete electrical characteristics of the VDD/DC+ monitor.
- Software should take care not to inadvertently disable the V_{DD} Monitor as a reset source when writing to RSTSRC to enable other reset sources or to trigger a software reset. All writes to RSTSRC should explicitly set PORSF to 1 to keep the V_{DD} Monitor enabled as a reset source.
- The VDD/DC+ supply monitor must be enabled before selecting it as a reset source**.** Selecting the VDD/DC+ supply monitor as a reset source before it has stabilized may generate a system reset. In systems where this reset would be undesirable, a delay should be introduced between enabling the VDD/DC+ supply monitor and selecting it as a reset source. See Section “4. Electrical Characteristics” on page 40 for minimum VDD/DC+ Supply Monitor turn-on time. **No delay should be introduced in systems where software contains routines that erase or write Flash memory.** The procedure for enabling the VDD/DC+ supply monitor and selecting it as a reset source is shown below:
    1. Enable the VDD/DC+ Supply Monitor (VDMEN bit in VDM0CN = 1).
    2. Wait for the VDD/DC+ Supply Monitor to stabilize (optional).
    3. Select the VDD/DC+ Supply Monitor as a reset source (PORSF bit in RSTSRC = 1).

SFR Definition 18.1. VDM0CN: VDD/DC+ Supply Monitor Control

Bit	7	6	5	4	3	2	1	0
Name	VDMEN	VDDSTAT	VDDOK	VBATOK	VDDOKIE	VBATOKIE		
Type	R/W	R	R	R	R/W	R/W	R/W	R/W
Reset	1	Varies	Varies	Varies	1	0	0	0

SFR Page = 0x0; SFR Address = 0xFF

Bit	Name	Function
7	VDMEN	**VDD/DC+ Supply Monitor Enable.** This bit turns the VDD/DC+ supply monitor circuit on/off. The VDD/DC+ Supply Monitor cannot generate system resets until it is also selected as a reset source in register RSTSRC (SFR Definition 18.2). 0: VDD/DC+ Supply Monitor Disabled. 1: VDD/DC+ Supply Monitor Enabled.
6	VDDSTAT	**VDD/DC+ Supply Status.** This bit indicates the current power supply status. 0: VDD/DC+ is at or below the V_{RST} threshold. 1: VDD/DC+ is above the V_{RST} threshold.
5	VDDOK	**VDD/DC+ Supply Status (Early Warning).** This bit indicates the current VDD/DC+ power supply status. 0: VDD/DC+ is at or below the VDD_{WARN} threshold. 1: VDD/DC+ is above the VDD_{WARN} threshold.
4	VBATOK	**VBAT Supply Status (Early Warning).** This bit indicates the current VBAT power supply status. This bit is only present on ‘F912 and ‘F902 devices. 0: VBAT is at or below the $VBAT_{WARN}$ threshold. 1: VBAT is above the $VBAT_{WARN}$ threshold.
3	VDDOKIE	**VDD/DC+ Early Warning Interrupt Enable.** Enables the VDD/DC+ Early Warning Interrupt. This bit only has an effect on ‘F912 and ‘F902 devices. All other devices behave as if this bit is set to 1. 0: VDD/DC+ Early Warning Interrupt is disabled. 1: VDD/DC+ Early Warning Interrupt is enabled.
2	VBATOKIE	**VBAT Early Warning Interrupt Enable.** Enables the VBAT Early Warning Interrupt. This bit only has an effect on ‘F912 and ‘F902 devices. All other devices behave as if this bit is set to 0. 0: VBAT Early Warning Interrupt is disabled. 1: VBAT Early Warning Interrupt is enabled.
1:0	Unused	**Unused.** Read = 00b. Write = Don’t Care.

18.3. External Reset

The external $\overline{RST}$ pin provides a means for external circuitry to force the device into a reset state. Asserting an active-low signal on the $\overline{RST}$ pin generates a reset; an external pullup and/or decoupling of the $\overline{RST}$ pin may be necessary to avoid erroneous noise-induced resets. See Table 4.4 for complete $\overline{RST}$ pin specifications. The external reset remains functional even when the device is in the low power suspend and sleep modes. The PINRSF flag (RSTSRC.0) is set on exit from an external reset.

18.4. Missing Clock Detector Reset

The Missing Clock Detector (MCD) is a one-shot circuit that is triggered by the system clock. If the system clock remains high or low for more than 100 µs, the one-shot will time out and generate a reset. After a MCD reset, the MCDRSF flag (RSTSRC.2) will read 1, signifying the MCD as the reset source; otherwise, this bit reads 0. Writing a 1 to the MCDRSF bit enables the Missing Clock Detector; writing a 0 disables it. The missing clock detector reset is automatically disabled when the device is in the low power suspend or sleep mode. Upon exit from either low power state, the enabled/disabled state of this reset source is restored to its previous value. The state of the $\overline{RST}$ pin is unaffected by this reset.

18.5. Comparator0 Reset

Comparator0 can be configured as a reset source by writing a 1 to the C0RSEF flag (RSTSRC.5). Comparator0 should be enabled and allowed to settle prior to writing to C0RSEF to prevent any turn-on chatter on the output from generating an unwanted reset. The Comparator0 reset is active-low: if the non-inverting input voltage (on CP0+) is less than the inverting input voltage (on CP0–), the device is put into the reset state. After a Comparator0 reset, the C0RSEF flag (RSTSRC.5) will read 1 signifying Comparator0 as the reset source; otherwise, this bit reads 0. The Comparator0 reset source remains functional even when the device is in the low power suspend and sleep states as long as Comparator0 is also enabled as a wake-up source. The state of the $\overline{RST}$ pin is unaffected by this reset.

18.6. PCA Watchdog Timer Reset

The programmable Watchdog Timer (WDT) function of the Programmable Counter Array (PCA) can be used to prevent software from running out of control during a system malfunction. The PCA WDT function can be enabled or disabled by software as described in Section “26.4. Watchdog Timer Mode” on page 313; the WDT is enabled and clocked by SYSCLK / 12 following any reset. If a system malfunction prevents user software from updating the WDT, a reset is generated and the WDTRSF bit (RSTSRC.5) is set to 1. The PCA Watchdog Timer reset source is automatically disabled when the device is in the low power suspend or sleep mode. Upon exit from either low power state, the enabled/disabled state of this reset source is restored to its previous value.The state of the $\overline{RST}$ pin is unaffected by this reset.

18.7. Flash Error Reset

If a Flash read/write/erase or program read targets an illegal address, a system reset is generated. This may occur due to any of the following:

- A Flash write or erase is attempted above user code space. This occurs when PSWE is set to 1 and a MOVX write operation targets an address above the Lock Byte address.
- A Flash read is attempted above user code space. This occurs when a MOVC operation targets an address above the Lock Byte address.
- A Program read is attempted above user code space. This occurs when user code attempts to branch to an address above the Lock Byte address.
- A Flash read, write or erase attempt is restricted due to a Flash security setting (see Section “13.3. Security Options” on page 140).
- A Flash write or erase is attempted while the V_{DD} Monitor is disabled.

The FERROR bit (RSTSRC.6) is set following a Flash error reset. The state of the $\overline{RST}$ pin is unaffected by this reset.

18.8. SmaRTClock (Real Time Clock) Reset

The SmaRTClock can generate a system reset on two events: SmaRTClock Oscillator Fail or SmaRTClock Alarm. The SmaRTClock Oscillator Fail event occurs when the SmaRTClock Missing Clock Detector is enabled and the SmaRTClock clock is below approximately 20 kHz. A SmaRTClock alarm event occurs when the SmaRTClock Alarm is enabled and the SmaRTClock timer value matches the ALARMn registers. The SmaRTClock can be configured as a reset source by writing a 1 to the RTC0RE flag (RSTSRC.7). The SmaRTClock reset remains functional even when the device is in the low power Suspend or Sleep mode. The state of the $\overline{RST}$ pin is unaffected by this reset.

18.9. Software Reset

Software may force a reset by writing a 1 to the SWRSF bit (RSTSRC.4). The SWRSF bit will read 1 following a software forced reset. The state of the $\overline{RST}$ pin is unaffected by this reset.

SFR Definition 18.2. RSTSRC: Reset Source

Bit	7	6	5	4	3	2	1	0
Name	RTC0RE	FERROR	C0RSEF	SWRSF	WDTRSF	MCDRSF	PORSF	PINRSF
Type	R/W	R	R/W	R/W	R	R/W	R/W	R
Reset	Varies	Varies	Varies	Varies	Varies	Varies	Varies	Varies

SFR Page = 0x0; SFR Address = 0xEF.

Bit	Name	Description	Write	Read
7	RTC0RE	**SmaRTClock Reset Enable and Flag**	0: Disable SmaRTClock as a reset source. 1: Enable SmaRTClock as a reset source.	Set to 1 if SmaRTClock alarm or oscillator fail caused the last reset.
6	FERROR	**Flash Error Reset Flag.**	N/A	Set to 1 if Flash read/write/erase error caused the last reset.
5	C0RSEF	**Comparator0 Reset Enable and Flag.**	0: Disable Comparator0 as a reset source. 1: Enable Comparator0 as a reset source.	Set to 1 if Comparator0 caused the last reset.
4	SWRSF	**Software Reset Force and Flag.**	Writing a 1 forces a system reset.	Set to 1 if last reset was caused by a write to SWRSF.
3	WDTRSF	**Watchdog Timer Reset Flag.**	N/A	Set to 1 if Watchdog Timer overflow caused the last reset.
2	MCDRSF	**Missing Clock Detector (MCD) Enable and Flag.**	0: Disable the MCD. 1: Enable the MCD. The MCD triggers a reset if a missing clock condition is detected.	Set to 1 if Missing Clock Detector timeout caused the last reset.
1	PORSF	**Power-On / Power-Fail Reset Flag, and Power-Fail Reset Enable.**	0: Disable the VDD/DC+ Supply Monitor as a reset source. 1: Enable the VDD/DC+ Supply Monitor as a reset source.[3]	Set to 1 anytime a power-on or V_{DD} monitor reset occurs.[2]
0	PINRSF	**HW Pin Reset Flag.**	N/A	Set to 1 if $\overline{RST}$ pin caused the last reset.

Notes:
1. It is safe to use read-modify-write operations (ORL, ANL, etc.) to enable or disable specific interrupt sources.
2. If PORSF read back 1, the value read from all other bits in this register are indeterminate.
3. Writing a 1 to PORSF before the VDD/DC+ Supply Monitor is stabilized may generate a system reset.

19. Clocking Sources

C8051F91x-C8051F90x devices include a programmable precision internal oscillator, an external oscillator drive circuit, a low power internal oscillator, and a SmaRTClock real time clock oscillator. The precision internal oscillator can be enabled/disabled and calibrated using the OSCICN and OSCICL registers, as shown in Figure 19.1. The external oscillator can be configured using the OSCXCN register. The low power internal oscillator is automatically enabled and disabled when selected and deselected as a clock source. SmaRTClock operation is described in the SmaRTClock oscillator chapter.

The system clock (SYSCLK) can be derived from the precision internal oscillator, external oscillator, low power internal oscillator, or SmaRTClock oscillator. The global clock divider can generate a system clock that is 1, 2, 4, 8, 16, 32, 64, or 128 times slower that the selected input clock source. Oscillator electrical specifications can be found in the Electrical Specifications Chapter.

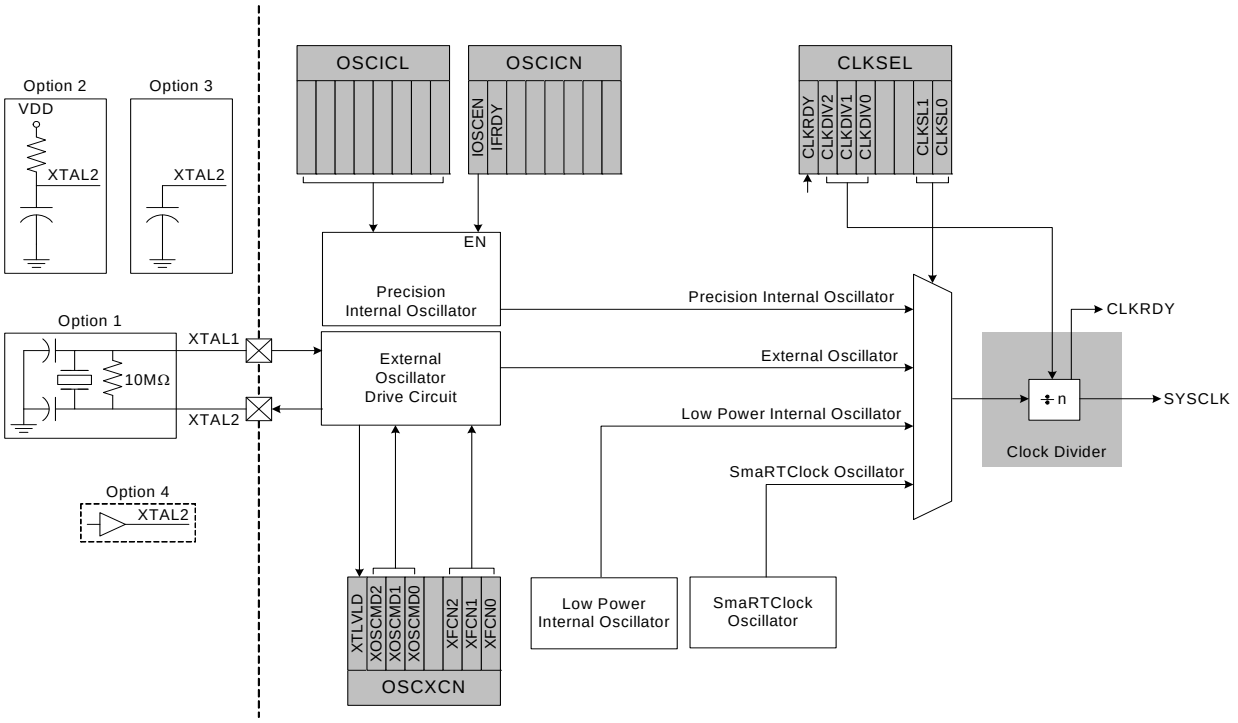

Figure 19.1. Clocking Sources Block Diagram

The proper way of changing the system clock when both the clock source and the clock divide value are being changed is as follows:

If switching from a fast “undivided” clock to a slower “undivided” clock:

a. Change the clock divide value.

b. Poll for CLKRDY > 1.

c. Change the clock source.

If switching from a slow “undivided” clock to a faster “undivided” clock:

a. Change the clock source.

b. Change the clock divide value.

c. Poll for CLKRDY > 1.

19.1. Programmable Precision Internal Oscillator

All C8051F91x-C8051F90x devices include a programmable precision internal oscillator that may be selected as the system clock. OSCICL is factory calibrated to obtain a 24.5 MHz frequency. See Section “4. Electrical Characteristics” on page 40 for complete oscillator specifications.

The precision oscillator supports a spread spectrum mode which modulates the output frequency in order to reduce the EMI generated by the system. When enabled (SSE = 1), the oscillator output frequency is modulated by a stepped triangle wave whose frequency is equal to the oscillator frequency divided by 384 (63.8 kHz using the factory calibration). The deviation from the nominal oscillator frequency is +0%, –1.6%, and the step size is typically 0.26% of the nominal frequency. When using this mode, the typical average oscillator frequency is lowered from 24.5 MHz to 24.3 MHz.

19.2. Low Power Internal Oscillator

All C8051F91x-C8051F90x devices include a low power internal oscillator that defaults as the system clock after a system reset. The low power internal oscillator frequency is 20 MHz ± 10% and is automatically enabled when selected as the system clock and disabled when not in use. See Section “4. Electrical Characteristics” on page 40 for complete oscillator specifications.

19.3. External Oscillator Drive Circuit

All C8051F91x-C8051F90x devices include an external oscillator circuit that may drive an external crystal, ceramic resonator, capacitor, or RC network. A CMOS clock may also provide a clock input. Figure 19.1 shows a block diagram of the four external oscillator options. The external oscillator is enabled and configured using the OSCXCN register.

The external oscillator output may be selected as the system clock or used to clock some of the digital peripherals (e.g. Timers, PCA, etc.). See the data sheet chapters for each digital peripheral for details. See Section “4. Electrical Characteristics” on page 40 for complete oscillator specifications.

19.3.1. External Crystal Mode

If a crystal or ceramic resonator is used as the external oscillator, the crystal/resonator and a 10 MΩ resistor must be wired across the XTAL1 and XTAL2 pins as shown in Figure 19.1, Option 1. Appropriate loading capacitors should be added to XTAL1 and XTAL2, and both pins should be configured for analog I/O with the digital output drivers disabled.

Figure 19.2 shows the external oscillator circuit for a 20 MHz quartz crystal with a manufacturer recommended load capacitance of 12.5 pF. Loading capacitors are "in series" as seen by the crystal and "in parallel" with the stray capacitance of the XTAL1 and XTAL2 pins. The total value of the each loading capacitor and the stray capacitance of each XTAL pin should equal 12.5pF x 2 = 25 pF. With a stray capacitance of 10 pF per pin, the 15 pF capacitors yield an equivalent series capacitance of 12.5 pF across the crystal.

Note: The recommended load capacitance depends upon the crystal and the manufacturer. Please refer to the crystal data sheet when completing these calculations.

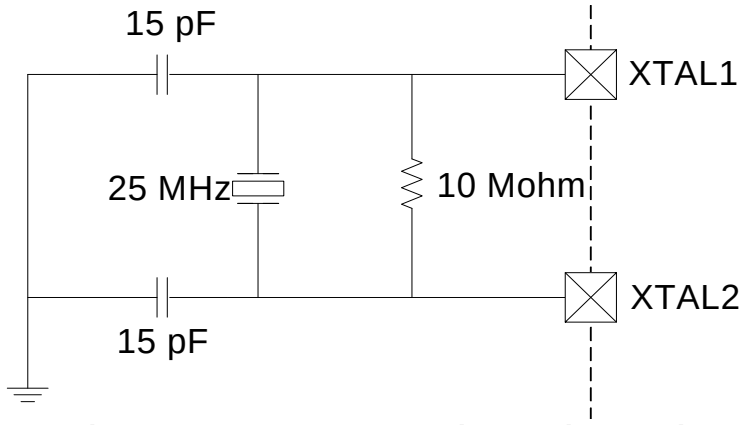

Figure 19.2. 25 MHz External Crystal Example

Important Note on External Crystals: Crystal oscillator circuits are quite sensitive to PCB layout. The crystal should be placed as close as possible to the XTAL pins on the device. The traces should be as short as possible and shielded with ground plane from any other traces which could introduce noise or interference.

When using an external crystal, the external oscillator drive circuit must be configured by software for *Crystal Oscillator Mode* or *Crystal Oscillator Mode with divide by 2 stage*. The divide by 2 stage ensures that the clock derived from the external oscillator has a duty cycle of 50%. The External Oscillator Frequency Control value (XFCN) must also be specified based on the crystal frequency. The selection should be based on Table 19.1. For example, a 25 MHz crystal requires an XFCN setting of 111b.

Table 19.1. Recommended XFCN Settings for Crystal Mode

XFCN	Crystal Frequency	Bias Current	Typical Supply Current (VDD = 2.4 V)
000	f ≤ 20 kHz	0.5 µA	3.0 µA, f = 32.768 kHz
001	20 kHz < f ≤ 58 kHz	1.5 µA	4.8 µA, f = 32.768 kHz
010	58 kHz < f ≤ 155 kHz	4.8 µA	9.6 µA, f = 32.768 kHz
011	155 kHz < f ≤ 415 kHz	14 µA	28 µA, f = 400 kHz
100	415 kHz < f ≤ 1.1 MHz	40 µA	71 µA, f = 400 kHz
101	1.1 MHz < f ≤ 3.1 MHz	120 µA	193 µA, f = 400 kHz
110	3.1 MHz < f ≤ 8.2 MHz	550 µA	940 µA, f = 8 MHz
111	8.2 MHz < f ≤ 25 MHz	2.6 mA	3.9 mA, f = 25 MHz

When the crystal oscillator is first enabled, the external oscillator valid detector allows software to determine when the external system clock has stabilized. Switching to the external oscillator before the crystal oscillator has stabilized can result in unpredictable behavior. The recommended procedure for starting the crystal is as follows:

1. Configure XTAL1 and XTAL2 for analog I/O and disable the digital output drivers.
2. Configure and enable the external oscillator.
3. Poll for XTLVLD => 1.
4. Switch the system clock to the external oscillator.

19.3.2. External RC Mode

If an RC network is used as the external oscillator, the circuit should be configured as shown in Figure 19.1, Option 2. The RC network should be added to XTAL2, and XTAL2 should be configured for analog I/O with the digital output drivers disabled. XTAL1 is not affected in RC mode.

The capacitor should be no greater than 100 pF; however for very small capacitors, the total capacitance may be dominated by parasitic capacitance in the PCB layout. The resistor should be no smaller than 10 kΩ. The oscillation frequency can be determined by the following equation:

$$f = \frac{1.23 \times 10^3}{R \times C}$$

where
f = frequency of clock in MHzR = pull-up resistor value in kΩ
V_{DD} = power supply voltage in VoltsC = capacitor value on the XTAL2 pin in pF

To determine the required External Oscillator Frequency Control value (XFCN) in the OSCXCN Register, first select the RC network value to produce the desired frequency of oscillation. For example, if the frequency desired is 100 kHz, let R = 246 kΩ and C = 50 pF:

$$f = \frac{1.23 \times 10^3}{R \times C} = \frac{1.23 \times 10^3}{246 \times 50} = 100\ \text{kHz}$$

where
f = frequency of clock in MHz R = pull-up resistor value in kΩ
V_{DD} = power supply voltage in Volts C = capacitor value on the XTAL2 pin in pF

Referencing Table 19.2, the recommended XFCN setting is 010.

Table 19.2. Recommended XFCN Settings for RC and C modes

XFCN	Approximate Frequency Range (RC and C Mode)	K Factor (C Mode)	Typical Supply Current/ Actual Measured Frequency (C Mode, VDD = 2.4 V)
000	f ≤ 25 kHz	K Factor = 0.87	3.0 µA, f = 11 kHz, C = 33 pF
001	25 kHz < f ≤ 50 kHz	K Factor = 2.6	5.5 µA, f = 33 kHz, C = 33 pF
010	50 kHz < f ≤ 100 kHz	K Factor = 7.7	13 µA, f = 98 kHz, C = 33 pF
011	100 kHz < f ≤ 200 kHz	K Factor = 22	32 µA, f = 270 kHz, C = 33 pF
100	200 kHz < f ≤ 400 kHz	K Factor = 65	82 µA, f = 310 kHz, C = 46 pF
101	400 kHz < f ≤ 800 kHz	K Factor = 180	242 µA, f = 890 kHz, C = 46 pF
110	800 kHz < f ≤ 1.6 MHz	K Factor = 664	1.0 mA, f = 2.0 MHz, C = 46 pF
111	1.6 MHz < f ≤ 3.2 MHz	K Factor = 1590	4.6 mA, f = 6.8 MHz, C = 46 pF

When the RC oscillator is first enabled, the external oscillator valid detector allows software to determine when oscillation has stabilized. The recommended procedure for starting the RC oscillator is as follows:

1. Configure XTAL2 for analog I/O and disable the digital output drivers.
2. Configure and enable the external oscillator.
3. Poll for XTLVLD => 1.
4. Switch the system clock to the external oscillator.

19.3.3. External Capacitor Mode

If a capacitor is used as the external oscillator, the circuit should be configured as shown in Figure 19.1, Option 3. The capacitor should be added to XTAL2, and XTAL2 should be configured for analog I/O with the digital output drivers disabled. XTAL1 is not affected in RC mode.

The capacitor should be no greater than 100 pF; however, for very small capacitors, the total capacitance may be dominated by parasitic capacitance in the PCB layout. The oscillation frequency and the required External Oscillator Frequency Control value (XFCN) in the OSCXCN Register can be determined by the following equation:

$$f = \frac{KF}{C \times V_{DD}}$$

where
f = frequency of clock in MHzR = pull-up resistor value in kΩ
V_{DD} = power supply voltage in VoltsC = capacitor value on the XTAL2 pin in pF

Below is an example of selecting the capacitor and finding the frequency of oscillation Assume V_{DD} = 3.0 V and f = 150 kHz:

$$f = \frac{KF}{C \times V_{DD}}$$

$$0.150\ \text{MHz} = \frac{KF}{C \times 3.0}$$

Since a frequency of roughly 150 kHz is desired, select the K Factor from Table 19.2 as KF = 22:

$$0.150\ \text{MHz} = \frac{22}{C \times 3.0\ \text{V}}$$

$$C = \frac{22}{0.150\ \text{MHz} \times 3.0\ \text{V}}$$

$$C = 48.8\ \text{pF}$$

Therefore, the XFCN value to use in this example is 011 and C is approximately 50 pF.

The recommended startup procedure for C mode is the same as RC mode.

19.3.4. External CMOS Clock Mode

If an external CMOS clock is used as the external oscillator, the clock should be directly routed into XTAL2. The XTAL2 pin should be configured as a digital input. XTAL1 is not used in external CMOS clock mode.

The external oscillator valid detector will always return zero when the external oscillator is configured to External CMOS Clock mode.

19.4. Special Function Registers for Selecting and Configuring the System Clock

The clocking sources on C8051F91x-C8051F90x devices are enabled and configured using the OSCICN, OSCICL, OSCXCN and the SmaRTClock internal registers. See Section “20. SmaRTClock (Real Time Clock)” on page 195 for SmaRTClock register descriptions. The system clock source for the MCU can be selected using the CLKSEL register. To minimize active mode current, the oneshot timer which sets Flash read time should by bypassed when the system clock is greater than 10 MHz. See the FLSCL register description for details.

The clock selected as the system clock can be divided by 1, 2, 4, 8, 16, 32, 64, or 128. When switching between two clock divide values, the transition may take up to 128 cycles of the undivided clock source. The CLKRDY flag can be polled to determine when the new clock divide value has been applied. The clock divider must be set to "divide by 1" when entering Suspend or Sleep Mode.

The system clock source may also be switched on-the-fly. The switchover takes effect after one clock period of the slower oscillator.

SFR Definition 19.1. CLKSEL: Clock Select

Bit	7	6	5	4	3	2	1	0
Name	CLKRDY	CLKDIV[2:0]				CLKSEL[2:0]		
Type	R	R/W	R/W	R/W	R/W	R/W	R/W	R/W
Reset	0	0	1	1	0	1	0	0

SFR Page = All Pages; SFR Address = 0xA9

Bit	Name	Function
7	CLKRDY	**System Clock Divider Clock Ready Flag.** 0: The selected clock divide setting has not been applied to the system clock. 1: The selected clock divide setting has been applied to the system clock.
6:4	CLKDIV[2:0]	**System Clock Divider Bits.** Selects the clock division to be applied to the undivided system clock source. 000: System clock is divided by 1. 001: System clock is divided by 2. 010: System clock is divided by 4. 011: System clock is divided by 8. 100: System clock is divided by 16. 101: System clock is divided by 32. 110: System clock is divided by 64. 111: System clock is divided by 128.
3	Unused	**Unused.** Read = 0b. Must Write 0b.
2:0	CLKSEL[2:0]	**System Clock Select.** Selects the oscillator to be used as the undivided system clock source. 000: Precision Internal Oscillator. 001: External Oscillator. 011: SmaRTClock Oscillator. 100: Low Power Oscillator. All other values reserved.

SFR Definition 19.2. OSCICN: Internal Oscillator Control

Bit	7	6	5	4	3	2	1	0
Name	IOSCEN	IFRDY	Reserved[5:0]					
Type	R/W	R	R/W	R/W	R/W	R/W	R/W	R/W
Reset	0	0	Varies	Varies	Varies	Varies	Varies	Varies

SFR Page = 0x0; SFR Address = 0xB2

Bit	Name	Function
7	IOSCEN	**Internal Oscillator Enable.** 0: Internal oscillator disabled. 1: Internal oscillator enabled.
6	IFRDY	**Internal Oscillator Frequency Ready Flag.** 0: Internal oscillator is not running at its programmed frequency. 1: Internal oscillator is running at its programmed frequency.
5:0	Reserved	**Reserved.** Must perform read-modify-write.

Note: Read-modify-write operations such as ORL and ANL must be used to set or clear the enable bit of this register.

SFR Definition 19.3. OSCICL: Internal Oscillator Calibration

Bit	7	6	5	4	3	2	1	0
Name	SSE	OSCICL[6:0]						
Type	R/W	R	R/W	R/W	R/W	R/W	R/W	R/W
Reset	0	Varies	Varies	Varies	Varies	Varies	Varies	Varies

SFR Page = 0x0; SFR Address = 0xB3

Bit	Name	Function
7	SSE	**Spread Spectrum Enable.** 0: Spread Spectrum clock dithering disabled. 1: Spread Spectrum clock dithering enabled.
6:0	OSCICL	**Internal Oscillator Calibration.** Factory calibrated to obtain a frequency of 24.5 MHz. Incrementing this register decreases the oscillator frequency and decrementing this register increases the oscillator frequency. The step size is approximately 1% of the calibrated frequency. The recommended calibration frequency range is between 16 and 24.5 MHz.

SFR Definition 19.4. OSCXCN: External Oscillator Control

Bit	7	6	5	4	3	2	1	0
Name	XCLKVLD	XOSCMD[2:0]			Reserved	XFCN[2:0]		
Type	R	R	R/W	R/W	R/W	R/W	R/W	R/W
Reset	0	0	0	0	0	0	0	0

SFR Page = 0x0; SFR Address = 0xB1

Bit	Name	Function
7	XCLKVLD	**External Oscillator Valid Flag.** Provides External Oscillator status and is valid at all times for all modes of operation except External CMOS Clock Mode and External CMOS Clock Mode with divide by 2. In these modes, XCLKVLD always returns 0. 0: External Oscillator is unused or not yet stable. 1: External Oscillator is running and stable.
6:4	XOSCMD	**External Oscillator Mode Bits.** Configures the external oscillator circuit to the selected mode. 00x: External Oscillator circuit disabled. 010: External CMOS Clock Mode. 011: External CMOS Clock Mode with divide by 2 stage. 100: RC Oscillator Mode. 101: Capacitor Oscillator Mode. 110: Crystal Oscillator Mode. 111: Crystal Oscillator Mode with divide by 2 stage.
3	Reserved	**Reserved.** Read = 0b. Must Write 0b.
2:0	XFCN	**External Oscillator Frequency Control Bits.** Controls the external oscillator bias current. 000-111: See Table 19.1 on page 188 (Crystal Mode) or Table 19.2 on page 189 (RC or C Mode) for recommended settings.

20. SmaRTClock (Real Time Clock)

C8051F91x-C8051F90x devices include an ultra low power 32-bit SmaRTClock Peripheral (Real Time Clock) with alarm. The SmaRTClock has a dedicated 32 kHz oscillator that can be configured for use with or without a crystal. No external resistor or loading capacitors are required. The on-chip loading capacitors are programmable to 16 discrete levels allowing compatibility with a wide range of crystals. The SmaRTClock can operate directly from a 0.9–3.6 V battery voltage and remains operational even when the device goes into its lowest power down mode. On ‘F912 and ‘F902 devices, the SmaRTClock output can be buffered and routed to a GPIO pin to provide an accurate, low frequency clock to other devices while the MCU is in its lowest power down mode (see “PMU0MD: Power Management Unit Mode” on page 156 for more details). ‘F912 and ‘F902 devices also support an ultra low power internal LFO that reduces sleep mode current.

The SmaRTClock allows a maximum of 36 hour 32-bit independent time-keeping when used with a 32.768 kHz Watch Crystal. The SmaRTClock provides an Alarm and Missing SmaRTClock events, which could be used as reset or wakeup sources. See Section “18. Reset Sources” on page 178 and Section “14. Power Management” on page 149 for details on reset sources and low power mode wake-up sources, respectively.

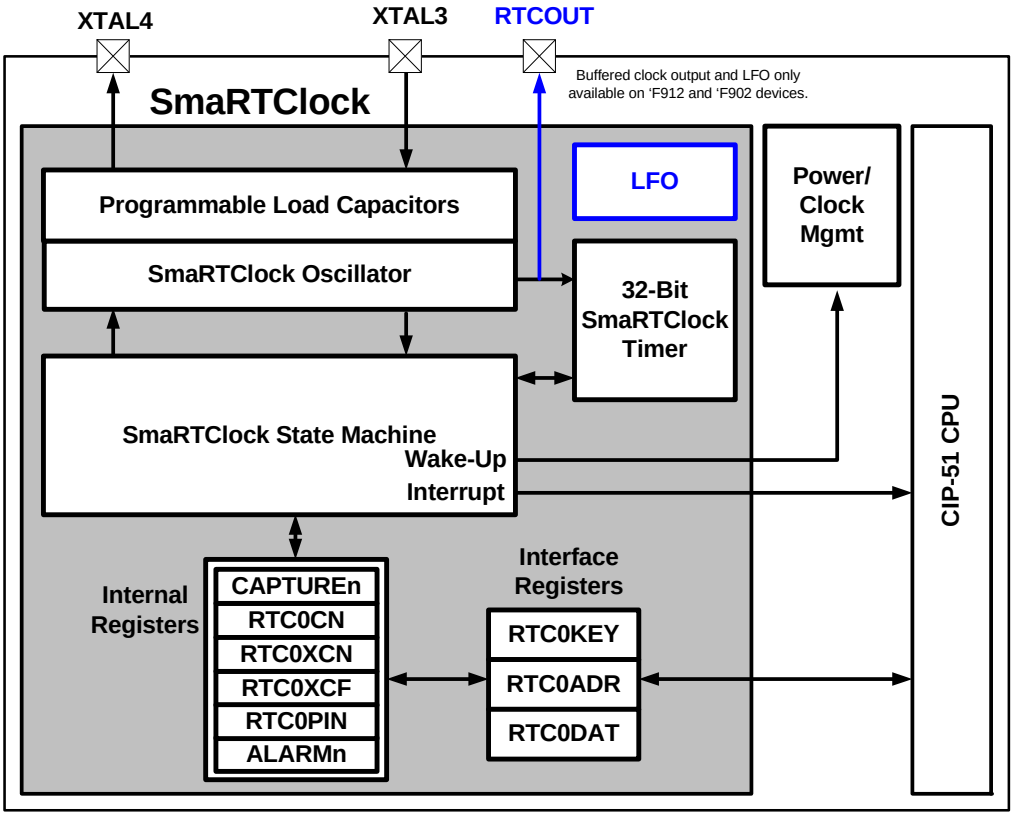

Figure 20.1. SmaRTClock Block Diagram

20.1. SmaRTClock Interface

The SmaRTClock Interface consists of three registers: RTC0KEY, RTC0ADR, and RTC0DAT. These interface registers are located on the CIP-51's SFR map and provide access to the SmaRTClock internal registers listed in Table 20.1. The SmaRTClock internal registers can only be accessed indirectly through the SmaRTClock Interface.

Table 20.1. SmaRTClock Internal Registers

SmaRTClock Address	SmaRTClock Register	Register Name	Description
0x00–0x03	CAPTUREn	SmaRTClock Capture Registers	Four Registers used for setting the 32-bit SmaRTClock timer or reading its current value.
0x04	RTC0CN	SmaRTClock Control Register	Controls the operation of the SmaRTClock State Machine.
0x05	RTC0XCN	SmaRTClock Oscillator Control Register	Controls the operation of the SmaRTClock Oscillator. **Note:** Some bits in this register are only available on 'F912 and 'F902 devices.
0x06	RTC0XCF	SmaRTClock Oscillator Configuration Register	Controls the value of the progammable oscillator load capacitance and enables/disables AutoStep.
0x07	RTC0PIN	SmaRTClock Pin Configuration Register	Forces XTAL3 and XTAL4 to be internally shorted. **Note:** This register also contains other reserved bits which should not be modified.
0x08–0x0B	ALARMn	SmaRTClock Alarm Registers	Four registers used for setting or reading the 32-bit SmaRTClock alarm value.

20.1.1. SmaRTClock Lock and Key Functions

The SmaRTClock Interface is protected with a lock and key function. The SmaRTClock Lock and Key Register (RTC0KEY) must be written with the correct key codes, in sequence, before writes and reads to RTC0ADR and RTC0DAT may be performed. The key codes are: 0xA5, 0xF1. There are no timing restrictions, but the key codes must be written in order. If the key codes are written out of order, the wrong codes are written, or an indirect register read or write is attempted while the interface is locked, the SmaRTClock interface will be disabled, and the RTC0ADR and RTC0DAT registers will become inaccessible until the next system reset. Once the SmaRTClock interface is unlocked, software may perform any number of accesses to the SmaRTClock registers until the interface is re-locked or the device is reset. Any write to RTC0KEY while the SmaRTClock interface is unlocked will re-lock the interface.

Reading the RTC0KEY register at any time will provide the SmaRTClock Interface status and will not interfere with the sequence that is being written. The RTC0KEY register description in SFR Definition 20.1 lists the definition of each status code.

20.1.2. Using RTC0ADR and RTC0DAT to Access SmaRTClock Internal Registers

The SmaRTClock internal registers can be read and written using RTC0ADR and RTC0DAT. The RTC0ADR register selects the SmaRTClock internal register that will be targeted by subsequent reads or writes. Recommended instruction timing is provided in this section. If the recommended instruction timing is not followed, then BUSY (RTC0ADR.7) should be checked prior to each read or write operation to make sure the SmaRTClock Interface is not busy performing the previous read or write operation. A SmaRTClock Write operation is initiated by writing to the RTC0DAT register. Below is an example of writing to a SmaRTClock internal register.

1. Poll BUSY (RTC0ADR.7) until it returns 0 or follow recommended instruction timing.
2. Write 0x05 to RTC0ADR. This selects the internal RTC0CN register at SmaRTClock Address 0x05.
3. Write 0x00 to RTC0DAT. This operation writes 0x00 to the internal RTC0CN register.

A SmaRTClock Read operation is initiated by setting the SmaRTClock Interface Busy bit. This transfers the contents of the internal register selected by RTC0ADR to RTC0DAT. The transferred data will remain in RTC0DAT until the next read or write operation. Below is an example of reading a SmaRTClock internal register.

1. Poll BUSY (RTC0ADR.7) until it returns 0 or follow recommended instruction timing.
2. Write 0x05 to RTC0ADR. This selects the internal RTC0CN register at SmaRTClock Address 0x05.
3. Write 1 to BUSY. This initiates the transfer of data from RTC0CN to RTC0DAT.
4. Poll BUSY (RTC0ADR.7) until it returns 0 or follow recommend instruction timing.
5. Read data from RTC0DAT. This data is a copy of the RTC0CN register.

Note: The RTC0ADR and RTC0DAT registers will retain their state upon a device reset.

20.1.3. RTC0ADR Short Strobe Feature

Reads and writes to indirect SmaRTClock registers normally take 7 system clock cycles. To minimize the indirect register access time, the Short Strobe feature decreases the read and write access time to 6 system clocks. The Short Strobe feature is automatically enabled on reset and can be manually enabled/disabled using the SHORT (RTC0ADR.4) control bit.

Recommended Instruction Timing for a single register read with short strobe enabled:

```
mov RTC0ADR, #095h
nop
nop
nop
mov A, RTC0DAT
```

Recommended Instruction Timing for a single register write with short strobe enabled:

```
mov RTC0ADR, #095h
mov RTC0DAT, #000h
nop
```

20.1.4. SmaRTClock Interface Autoread Feature

When Autoread is enabled, each read from RTC0DAT initiates the next indirect read operation on the SmaRTClock internal register selected by RTC0ADR. Software should set the BUSY bit once at the beginning of each series of consecutive reads. Software should follow recommended instruction timing or check if the SmaRTClock Interface is busy prior to reading RTC0DAT. Autoread is enabled by setting AUTORD (RTC0ADR.6) to logic 1.

20.1.5. RTC0ADR Autoincrement Feature

For ease of reading and writing the 32-bit CAPTURE and ALARM values, RTC0ADR automatically increments after each read or write to a CAPTUREn or ALARMn register. This speeds up the process of setting an alarm or reading the current SmaRTClock timer value. Autoincrement is always enabled.

Recommended Instruction Timing for a multi-byte register read with short strobe and auto read enabled:

```
mov RTC0ADR, #0d0h
nop
nop
nop
mov A, RTC0DAT
nop
nop
mov A, RTC0DAT
nop
nop
mov A, RTC0DAT
nop
nop
mov A, RTC0DAT
```

Recommended Instruction Timing for a multi-byte register write with short strobe enabled:

```
mov RTC0ADR, #010h
mov RTC0DAT, #05h
nop
mov RTC0DAT, #06h
nop
mov RTC0DAT, #07h
nop
mov RTC0DAT, #08h
nop
```

SFR Definition 20.1. RTC0KEY: SmaRTClock Lock and Key

Bit	7	6	5	4	3	2	1	0
Name	RTC0ST[7:0]							
Type	R/W							
Reset	0	0	0	0	0	0	0	0

SFR Page = 0x0; SFR Address = 0xAE

Bit	Name	Function
7:0	RTC0ST	**SmaRTClock Interface Lock/Key and Status.** Locks/unlocks the SmaRTClock interface when written. Provides lock status when read. **Read:** **0x00:** SmaRTClock Interface is locked. **0x01:** SmaRTClock Interface is locked. First key code (0xA5) has been written, waiting for second key code. **0x02:** SmaRTClock Interface is unlocked. First and second key codes (0xA5, 0xF1) have been written. **0x03:** SmaRTClock Interface is disabled until the next system reset. **Write:** When RTC0ST = 0x00 (locked), writing 0xA5 followed by 0xF1 unlocks the SmaRTClock Interface. When RTC0ST = 0x01 (waiting for second key code), writing any value other than the second key code (0xF1) will change RTC0STATE to 0x03 and disable the SmaRTClock Interface until the next system reset. When RTC0ST = 0x02 (unlocked), any write to RTC0KEY will lock the SmaRT-Clock Interface. When RTC0ST = 0x03 (disabled), writes to RTC0KEY have no effect.

SFR Definition 20.2. RTC0ADR: SmaRTClock Address

Bit	7	6	5	4	3	2	1	0
Name	BUSY	AUTORD		SHORT	ADDR[3:0]			
Type	R/W	R/W	R	R/W	R/W			
Reset	0	0	0	0	0	0	0	0

SFR Page = 0x0; SFR Address = 0xAC

Bit	Name	Function
7	BUSY	**SmaRTClock Interface Busy Indicator.** Indicates SmaRTClock interface status. Writing 1 to this bit initiates an indirect read.
6	AUTORD	**SmaRTClock Interface Autoread Enable.** Enables/disables Autoread. 0: Autoread Disabled. 1: Autoread Enabled.
5	Unused	Unused. Read = 0b; Write = Don't Care.
4	SHORT	**Short Strobe Enable.** Enables/disables the Short Strobe Feature. 0: Short Strobe disabled. 1: Short Strobe enabled.
3:0	ADDR[3:0]	**SmaRTClock Indirect Register Address.** Sets the currently selected SmaRTClock register. See Table 20.1 for a listing of all SmaRTClock indirect registers.
Note: The ADDR bits increment after each indirect read/write operation that targets a CAPTUREn or ALARMn internal SmaRTClock register.		

SFR Definition 20.3. RTC0DAT: SmaRTClock Data

Bit	7	6	5	4	3	2	1	0
Name	RTC0DAT[7:0]							
Type	R/W							
Reset	0	0	0	0	0	0	0	0

SFR Page= 0x0; SFR Address = 0xAD

Bit	Name	Function
7:0	RTC0DAT	**SmaRTClock Data Bits.** Holds data transferred to/from the internal SmaRTClock register selected by RTC0ADR.
Note: Read-modify-write instructions (orl, anl, etc.) should not be used on this register.		

20.2. SmaRTClock Clocking Sources

The SmaRTClock peripheral is clocked from its own timebase, independent of the system clock. The SmaRTClock timebase can be derived from an external CMOS clock, the internal LFO (‘F912 and ‘F902 devices only), or the SmaRTClock oscillator circuit, which has two modes of operation: Crystal Mode, and Self-Oscillate Mode. The oscillation frequency is 32.768 kHz in Crystal Mode and can be programmed in the range of 10 kHz to 40 kHz in Self-Oscillate Mode. The internal LFO frequency is 16.4 kHz ±20%. The frequency of the SmaRTClock oscillator can be measured with respect to another oscillator using an on-chip timer. See Section “25. Timers” on page 279 for more information on how this can be accomplished.

Note: The SmaRTClock timebase can be selected as the system clock and routed to a port pin. See Section “19. Clocking Sources” on page 186 for information on selecting the system clock source and Section “21. Port Input/Output” on page 214 for information on how to route the system clock to a port pin. On ‘F912 and ‘F902 devices, the SmaRTClock timebase can be routed to a port pin while the device is in its ultra low power sleep mode. See the PMU0MD register description for details.

20.2.1. Using the SmaRTClock Oscillator with a Crystal or External CMOS Clock

When using Crystal Mode, a 32.768 kHz crystal should be connected between XTAL3 and XTAL4. No other external components are required. The following steps show how to start the SmaRTClock crystal oscillator in software:

1. Set SmaRTClock to Crystal Mode (XMODE = 1).
2. Disable Automatic Gain Control (AGCEN) and enable Bias Doubling (BIASX2) for fast crystal startup.
3. Set the desired loading capacitance (RTC0XCF).
4. Enable power to the SmaRTClock oscillator circuit (RTC0EN = 1).
5. Wait 20 ms.
6. Poll the SmaRTClock Clock Valid Bit (CLKVLD) until the crystal oscillator stabilizes.
7. Poll the SmaRTClock Load Capacitance Ready Bit (LOADRDY) until the load capacitance reaches its programmed value.
8. Enable Automatic Gain Control (AGCEN) and disable Bias Doubling (BIASX2) for maximum power savings.
9. Enable the SmaRTClock missing clock detector.
10. Wait 2 ms.
11. Clear the PMU0CF wake-up source flags.

In Crystal Mode, the SmaRTClock oscillator may be driven by an external CMOS clock. The CMOS clock should be applied to XTAL3. XTAL4 should be left floating. The input low voltage (VIL) and input high voltage (VIH) for XTAL3 when used with an external CMOS clock are 0.1 and 0.8 V, respectively. The SmaRTClock oscillator should be configured to its lowest bias setting with AGC disabled. The CLKVLD bit is indeterminate when using a CMOS clock, however, the OSCFAIL bit may be checked 2 ms after SmaRTClock oscillator is powered on to ensure that there is a valid clock on XTAL3.

20.2.2. Using the SmaRTClock Oscillator in Self-Oscillate Mode

When using Self-Oscillate Mode, the XTAL3 and XTAL4 pins should be shorted together. The RTC0PIN register can be used to internally short XTAL3 and XTAL4. The following steps show how to configure SmaRTClock for use in Self-Oscillate Mode:

1. Set SmaRTClock to Self-Oscillate Mode (XMODE = 0).
2. Set the desired oscillation frequency:
   For oscillation at about 20 kHz, set BIASX2 = 0.
   For oscillation at about 40 kHz, set BIASX2 = 1.
3. The oscillator starts oscillating instantaneously.
4. Fine tune the oscillation frequency by adjusting the load capacitance (RTC0XCF).

20.2.3. Using the Low Frequency Oscillator (LFO)

The low frequency oscillator provides an ultra low power, on-chip clock source to the SmaRTClock. The typical frequency of oscillation is 16.4 kHz ±20%. No external components are required to use the LFO and the XTAL3 and XTAL4 pins do not need to be shorted together. The LFO is only available on ‘F912 and ‘F902 devices.

The following steps show how to configure SmaRTClock for use with the LFO:

1. Enable and select the Low Frequency Oscillator (LFOEN = 1).
2. The LFO starts oscillating instantaneously.

When the LFO is enabled, the SmaRTClock oscillator increments bit 1 of the 32-bit timer (instead of bit 0). This effectively multiplies the LFO frequency by 2, making the RTC timebase behave as if a 32.768 kHz crystal is connected at the output.

20.2.4. Programmable Load Capacitance

The programmable load capacitance has 16 values to support crystal oscillators with a wide range of recommended load capacitance. If Automatic Load Capacitance Stepping is enabled, the crystal load capacitors start at the smallest setting to allow a fast startup time, then slowly increase the capacitance until the final programmed value is reached. The final programmed loading capacitor value is specified using the LOADCAP bits in the RTC0XCF register. The LOADCAP setting specifies the amount of on-chip load capacitance and does not include any stray PCB capacitance. Once the final programmed loading capacitor value is reached, the LOADRDY flag will be set by hardware to logic 1.

When using the SmaRTClock oscillator in Self-Oscillate mode, the programmable load capacitance can be used to fine tune the oscillation frequency. In most cases, increasing the load capacitor value will result in a decrease in oscillation frequency.Table 20.2 shows the crystal load capacitance for various settings of LOADCAP.

Table 20.2. SmaRTClock Load Capacitance Settings

LOADCAP	Crystal Load Capacitance	Equivalent Capacitance seen on XTAL3 and XTAL4
0000	4.0 pF	8.0 pF
0001	4.5 pF	9.0 pF
0010	5.0 pF	10.0 pF
0011	5.5 pF	11.0 pF
0100	6.0 pF	12.0 pF
0101	6.5 pF	13.0 pF
0110	7.0 pF	14.0 pF
0111	7.5 pF	15.0 pF
1000	8.0 pF	16.0 pF
1001	8.5 pF	17.0 pF
1010	9.0 pF	18.0 pF
1011	9.5 pF	19.0 pF
1100	10.5 pF	21.0 pF
1101	11.5 pF	23.0 pF
1110	12.5 pF	25.0 pF
1111	13.5 pF	27.0 pF

20.2.5. Automatic Gain Control (Crystal Mode Only) and SmaRTClock Bias Doubling

Automatic Gain Control allows the SmaRTClock oscillator to trim the oscillation amplitude of a crystal in order to achieve the lowest possible power consumption. Automatic Gain Control automatically detects when the oscillation amplitude has reached a point where it safe to reduce the drive current, therefore, it may be enabled during crystal startup. It is recommended to enable Automatic Gain Control in most systems which use the SmaRTClock oscillator in Crystal Mode. The following are recommended crystal specifications and operating conditions when Automatic Gain Control is enabled:

- ESR < 50 kΩ
- Load Capacitance < 10 pF
- Supply Voltage < 3.0 V
- Temperature > –20 °C

When using Automatic Gain Control, it is recommended to perform an oscillation robustness test to ensure that the chosen crystal will oscillate under the worst case condition to which the system will be exposed. The worst case condition that should result in the least robust oscillation is at the following system conditions: lowest temperature, highest supply voltage, highest ESR, highest load capacitance, and lowest bias current (AGC enabled, Bias Double Disabled).

To perform the oscillation robustness test, the SmaRTClock oscillator should be enabled and selected as the system clock source. Next, the SYSCLK signal should be routed to a port pin configured as a push-pull digital output. The positive duty cycle of the output clock can be used as an indicator of oscillation robustness. As shown in Figure 20.2, duty cycles less than 55% indicate a robust oscillation. As the duty cycle approaches 60%, oscillation becomes less reliable and the risk of clock failure increases. Increasing the bias current (by disabling AGC) will always improve oscillation robustness and will reduce the output clock's duty cycle. This test should be performed at the worst case system conditions, as results at very low temperatures or high supply voltage will vary from results taken at room temperature or low supply voltage.

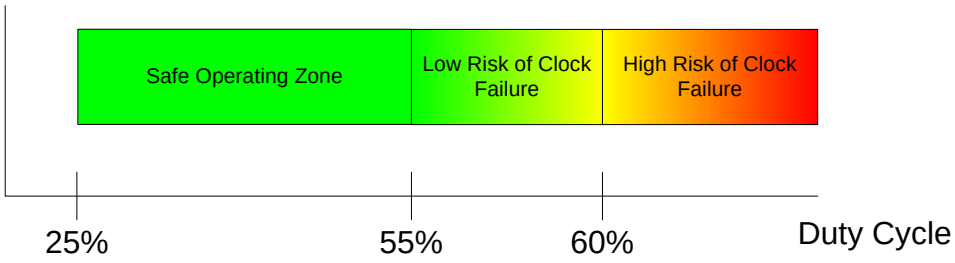

Figure 20.2. Interpreting Oscillation Robustness (Duty Cycle) Test Results

As an alternative to performing the oscillation robustness test, Automatic Gain Control may be disabled at the cost of increased power consumption (approximately 200 nA). Disabling Automatic Gain Control will provide the crystal oscillator with higher immunity against external factors which may lead to clock failure. Automatic Gain Control must be disabled if using the SmaRTClock oscillator in self-oscillate mode.

Table 20.3 shows a summary of the oscillator bias settings. The SmaRTClock Bias Doubling feature allows the self-oscillation frequency to be increased (almost doubled) and allows a higher crystal drive strength in crystal mode. High crystal drive strength is recommended when the crystal is exposed to poor environmental conditions such as excessive moisture. SmaRTClock Bias Doubling is enabled by setting BIASX2 (RTC0XCN.5) to 1.

Table 20.3. SmaRTClock Bias Settings

Mode	Setting	Power Consumption
Crystal	Bias Double Off, AGC On	Lowest 600 nA
	Bias Double Off, AGC Off	Low 800 nA
	Bias Double On, AGC On	High
	Bias Double On, AGC Off	Highest
Self-Oscillate	Bias Double Off	Low
	Bias Double On	High

20.2.6. Missing SmaRTClock Detector

The missing SmaRTClock detector is a one-shot circuit enabled by setting MCLKEN (RTC0CN.6) to 1. When the SmaRTClock Missing Clock Detector is enabled, OSCFAIL (RTC0CN.5) is set by hardware if SmaRTClock oscillator remains high or low for more than 100 µs.

A SmaRTClock Missing Clock detector timeout can trigger an interrupt, wake the device from a low power mode, or reset the device. See Section “12. Interrupt Handler” on page 126, Section “14. Power Management” on page 149, and Section “18. Reset Sources” on page 178 for more information.

Note: The SmaRTClock Missing Clock Detector should be disabled when making changes to the oscillator settings in RTC0XCN.

20.2.7. SmaRTClock Oscillator Crystal Valid Detector

The SmaRTClock oscillator crystal valid detector is an oscillation amplitude detector circuit used during crystal startup to determine when oscillation has started and is nearly stable. The output of this detector can be read from the CLKVLD bit (RTX0XCN.4).

Notes:

- The CLKVLD bit has a blanking interval of 2 ms. During the first 2 ms after turning on the crystal oscillator, the output of CLKVLD is not valid.
- This SmaRTClock crystal valid detector (CLKVLD) is not intended for detecting an oscillator failure. The missing SmaRTClock detector (CLKFAIL) should be used for this purpose.

20.3. SmaRTClock Timer and Alarm Function

The SmaRTClock timer is a 32-bit counter that, when running (RTC0TR = 1), is incremented every SmaRTClock oscillator cycle. The timer has an alarm function that can be set to generate an interrupt, wake the device from a low power mode, or reset the device at a specific time. See Section “12. Interrupt Handler” on page 126, Section “14. Power Management” on page 149, and Section “18. Reset Sources” on page 178 for more information.

The SmaRTClock timer includes an Auto Reset feature, which automatically resets the timer to zero one SmaRTClock cycle after an alarm occurs. When using Auto Reset, the Alarm match value should always be set to 1 count less than the desired match value. Auto Reset can be enabled by writing a 1 to ALRM (RTC0CN.2).

20.3.1. Setting and Reading the SmaRTClock Timer Value

The 32-bit SmaRTClock timer can be set or read using the six CAPTUREn internal registers. Note that the timer does not need to be stopped before reading or setting its value. The following steps can be used to set the timer value:

1. Write the desired 32-bit set value to the CAPTUREn registers.
2. Write 1 to RTC0SET. This will transfer the contents of the CAPTUREn registers to the SmaRTClock timer.
3. Operation is complete when RTC0SET is cleared to 0 by hardware.

The following steps can be used to read the current timer value:

1. Write 1 to RTC0CAP. This will transfer the contents of the timer to the CAPTUREn registers.
2. Poll RTC0CAP until it is cleared to 0 by hardware.
3. A snapshot of the timer value can be read from the CAPTUREn registers

20.3.2. Setting a SmaRTClock Alarm

The SmaRTClock alarm function compares the 32-bit value of SmaRTClock Timer to the value of the ALARMn registers. An alarm event is triggered if the SmaRTClock timer is **equal to** the ALARMn registers. If Auto Reset is enabled, the 32-bit timer will be cleared to zero one SmaRTClock cycle after the alarm event.

The SmaRTClock alarm event can be configured to reset the MCU, wake it up from a low power mode, or generate an interrupt. See Section “12. Interrupt Handler” on page 126, Section “14. Power Management” on page 149, and Section “18. Reset Sources” on page 178 for more information.

The following steps can be used to set up a SmaRTClock Alarm:

1. Disable SmaRTClock Alarm Events (RTC0AEN = 0).
2. Set the ALARMn registers to the desired value.
3. Enable SmaRTClock Alarm Events (RTC0AEN = 1).

Notes:

- The ALRM bit, which is used as the SmaRTClock Alarm Event flag, is cleared by disabling SmaRTClock Alarm Events (RTC0AEN = 0).
- If AutoReset is disabled, disabling (RTC0AEN = 0) then Re-enabling Alarm Events (RTC0AEN = 1) after a SmaRTClock Alarm without modifying ALARMn registers will automatically schedule the next alarm after 2^32 SmaRTClock cycles (approximately 36 hours using a 32.768 kHz crystal).
- The SmaRTClock Alarm Event flag will remain asserted for a maximum of one SmaRTClock cycle. See Section “14. Power Management” on page 149 for information on how to capture a SmaRTClock Alarm event using a flag which is not automatically cleared by hardware.

20.3.3. Software Considerations for using the SmaRTClock Timer and Alarm

The SmaRTClock timer and alarm have two operating modes to suit varying applications. The two modes are described below:

Mode 1:
The first mode uses the SmaRTClock timer as a perpetual timebase which is never reset to zero. Every 36 hours, the timer is allowed to overflow without being stopped or disrupted. The alarm interval is software managed and is added to the ALRMn registers by software after each alarm. This allows the alarm match value to always stay ahead of the timer by one software managed interval. If software uses 32-bit unsigned addition to increment the alarm match value, then it does not need to handle overflows since both the timer and the alarm match value will overflow in the same manner.

This mode is ideal for applications which have a long alarm interval (e.g., 24 or 36 hours) and/or have a need for a perpetual timebase. An example of an application that needs a perpetual timebase is one whose wake-up interval is constantly changing. For these applications, software can keep track of the number of timer overflows in a 16-bit variable, extending the 32-bit (36 hour) timer to a 48-bit (272 year) perpetual timebase.

Mode 2:
The second mode uses the SmaRTClock timer as a general purpose up counter which is auto reset to zero by hardware after each alarm. The alarm interval is managed by hardware and stored in the ALRMn registers. Software only needs to set the alarm interval once during device initialization. After each alarm, software should keep a count of the number of alarms that have occurred in order to keep track of time.

This mode is ideal for applications that require minimal software intervention and/or have a fixed alarm interval. This mode is the most power efficient since it requires less CPU time per alarm.

Internal Register Definition 20.4. RTC0CN: SmaRTClock Control

Bit	7	6	5	4	3	2	1	0
Name	RTC0EN	MCLKEN	OSCFAIL	RTC0TR	RTC0AEN	ALRM	RTC0SET	RTC0CAP
Type	R/W	R/W	R/W	R/W	R/W	R/W	R/W	R/W
Reset	0	0	Varies	0	0	0	0	0

SmaRTClock Address = 0x04

Bit	Name	Function		
7	RTC0EN	**SmaRTClock Enable.** Enables/disables the SmaRTClock oscillator and associated bias currents. 0: SmaRTClock oscillator disabled. 1: SmaRTClock oscillator enabled.		
6	MCLKEN	**Missing SmaRTClock Detector Enable.** Enables/disables the missing SmaRTClock detector. 0: Missing SmaRTClock detector disabled. 1: Missing SmaRTClock detector enabled.		
5	OSCFAIL	**SmaRTClock Oscillator Fail Event Flag.** Set by hardware when a missing SmaRTClock detector timeout occurs. Must be cleared by software. The value of this bit is not defined when the SmaRTClock oscillator is disabled.		
4	RTC0TR	**SmaRTClock Timer Run Control.** Controls if the SmaRTClock timer is running or stopped (holds current value). 0: SmaRTClock timer is stopped. 1: SmaRTClock timer is running.		
3	RTC0AEN	**SmaRTClock Alarm Enable.** Enables/disables the SmaRTClock alarm function. Also clears the ALRM flag. 0: SmaRTClock alarm disabled. 1: SmaRTClock alarm enabled.		
2	ALRM	**SmaRTClock Alarm Event Flag and Auto Reset Enable.** Reads return the state of the alarm event flag. Writes enable/disable the Auto Reset function.	Read: 0: SmaRTClock alarm event flag is de-asserted. 1: SmaRTClock alarm event flag is asserted.	Write: 0: Disable Auto Reset. 1: Enable Auto Reset.
1	RTC0SET	**SmaRTClock Timer Set.** Writing 1 initiates a SmaRTClock timer set operation. This bit is cleared to 0 by hardware to indicate that the timer set operation is complete.		
0	RTC0CAP	**SmaRTClock Timer Capture.** Writing 1 initiates a SmaRTClock timer capture operation. This bit is cleared to 0 by hardware to indicate that the timer capture operation is complete.		
Note: The ALRM flag will remain asserted for a maximum of one SmaRTClock cycle. See Section “Power Management” on page 149 for information on how to capture a SmaRTClock Alarm event using a flag which is not automatically cleared by hardware.				

Internal Register Definition 20.5. RTC0XCN: SmaRTClock Oscillator Control

Bit	7	6	5	4	3	2	1	0
Name	AGCEN	XMODE	BIASX2	CLKVLD	LFOEN			
Type	R/W	R/W	R/W	R	R	R	R	R
Reset	0	0	0	0	0	0	0	0

SmaRTClock Address = 0x05

Bit	Name	Function
7	AGCEN	**SmaRTClock Oscillator Automatic Gain Control (AGC) Enable.** 0: AGC disabled. 1: AGC enabled.
6	XMODE	**SmaRTClock Oscillator Mode.** Selects Crystal or Self Oscillate Mode. 0: Self-Oscillate Mode selected. 1: Crystal Mode selected.
5	BIASX2	**SmaRTClock Oscillator Bias Double Enable.** **Enables/disables the Bias Double feature.** 0: Bias Double disabled. 1: Bias Double enabled.
4	CLKVLD	**SmaRTClock Oscillator Crystal Valid Indicator.** Indicates if oscillation amplitude is sufficient for maintaining oscillation. 0: Oscillation has not started or oscillation amplitude is too low to maintain oscillation. 1: Sufficient oscillation amplitude detected.
3	LFOEN	**Low Frequency Oscillator Enable and Select.** Overrides XMODE and selects the internal low frequency oscillator (LFO) as the SmaRTClock oscillator source. Only available on ‘F912 and ‘F902 devices. 0: XMODE determines SmaRTClock oscillator source. 1: LFO enabled and selected as SmaRTClock oscillator source.
2:0	Unused	**Unused.** Read = 000b; Write = Don’t Care.

Internal Register Definition 20.6. RTC0XCF: SmaRTClock Oscillator Configuration

Bit	7	6	5	4	3	2	1	0
Name	AUTOSTP	LOADRDY			LOADCAP			
Type	R/W	R	R	R	R/W			
Reset	0	0	0	0	Varies	Varies	Varies	Varies

SmaRTClock Address = 0x06

Bit	Name	Function
7	AUTOSTP	**Automatic Load Capacitance Stepping Enable.** Enables/disables automatic load capacitance stepping. 0: Load capacitance stepping disabled. 1: Load capacitance stepping enabled.
6	LOADRDY	**Load Capacitance Ready Indicator.** Set by hardware when the load capacitance matches the programmed value. 0: Load capacitance is currently stepping. 1: Load capacitance has reached it programmed value.
5:4	Unused	**Unused.** Read = 00b; Write = Don't Care.
3:0	LOADCAP	**Load Capacitance Programmed Value.** Holds the user's desired value of the load capacitance. See Table 20.2 on page 203.

Internal Register Definition 20.7. RTC0PIN: SmaRTClock Pin Configuration

Bit	7	6	5	4	3	2	1	0
Name	RTC0PIN							
Type	W	R/W	R/W	R/W	R/W	R/W	R/W	R/W
Reset	0	Varies	Varies	Varies	Varies	Varies	Varies	Varies

SmaRTClock Address = 0x07

Bit	Name	Function
7	RTC0PIN	**SmaRTClock Pin Configuration.** 0: XTAL3 and XTAL4 in their normal configuration. 1: XTAL3 and XTAL4 internally shorted for use with Self Oscillate Mode.
6:0	Reserved	**Reserved.** Read = Varies. Software should not modify the value of these bits. To change the RTC0PIN setting, the entire register contents should be read, modified, then rewritten.

Internal Register Definition 20.8. CAPTUREn: SmaRTClock Timer Capture

Bit	7	6	5	4	3	2	1	0
Name	CAPTURE[31:0]							
Type	R/W	R/W	R/W	R/W	R/W	R/W	R/W	R/W
Reset	0	0	0	0	0	0	0	0

SmaRTClock Addresses: CAPTURE0 = 0x00; CAPTURE1 = 0x01; CAPTURE2 =0x02; CAPTURE3: 0x03.

Bit	Name	Function
7:0	CAPTURE[31:0]	**SmaRTClock Timer Capture.** These 4 registers (CAPTURE3–CAPTURE0) are used to read or set the 32-bit SmaRTClock timer. Data is transferred to or from the SmaRTClock timer when the RTC0SET or RTC0CAP bits are set.
Note: The least significant bit of the timer capture value is in CAPTURE0.0.		

Internal Register Definition 20.9. ALARMn: SmaRTClock Alarm Programmed Value

Bit	7	6	5	4	3	2	1	0
Name	ALARM[31:0]							
Type	R/W	R/W	R/W	R/W	R/W	R/W	R/W	R/W
Reset	0	0	0	0	0	0	0	0

SmaRTClock Addresses: ALARM0 = 0x08; ALARM1 = 0x09; ALARM2 = 0x0A; ALARM3 = 0x0B

Bit	Name	Function
7:0	ALARM[31:0]	**SmaRTClock Alarm Programmed Value.** These 4 registers (ALARM3–ALARM0) are used to set an alarm event for the SmaRTClock timer. The SmaRTClock alarm should be disabled (RTC0AEN=0) when updating these registers.
Note: The least significant bit of the alarm programmed value is in ALARM0.0.		

21. Port Input/Output

Digital and analog resources are available through 16 I/O pins. Port pins are organized as three byte-wide ports. Port pins P0.0–P1.6 can be defined as digital or analog I/O. Digital I/O pins can be assigned to one of the internal digital resources or used as general purpose I/O (GPIO). Analog I/O pins are used by the internal analog resources. P2.7 can be used as GPIO and is shared with the C2 Interface Data signal (C2D). See Section “27. C2 Interface” on page 322 for more details.

The designer has complete control over which digital and analog functions are assigned to individual Port pins, limited only by the number of physical I/O pins. This resource assignment flexibility is achieved through the use of a Priority Crossbar Decoder. See Section 21.3 for more information on the Crossbar.

All Port I/Os are 5 V tolerant when used as digital inputs or open-drain outputs. For Port I/Os configured as push-pull outputs, current is sourced from the VDD/DC+ supply. Port I/Os used for analog functions can operate up to the VDD/DC+ supply voltage. See Section 21.1 for more information on Port I/O operating modes and the electrical specifications chapter for detailed electrical specifications.

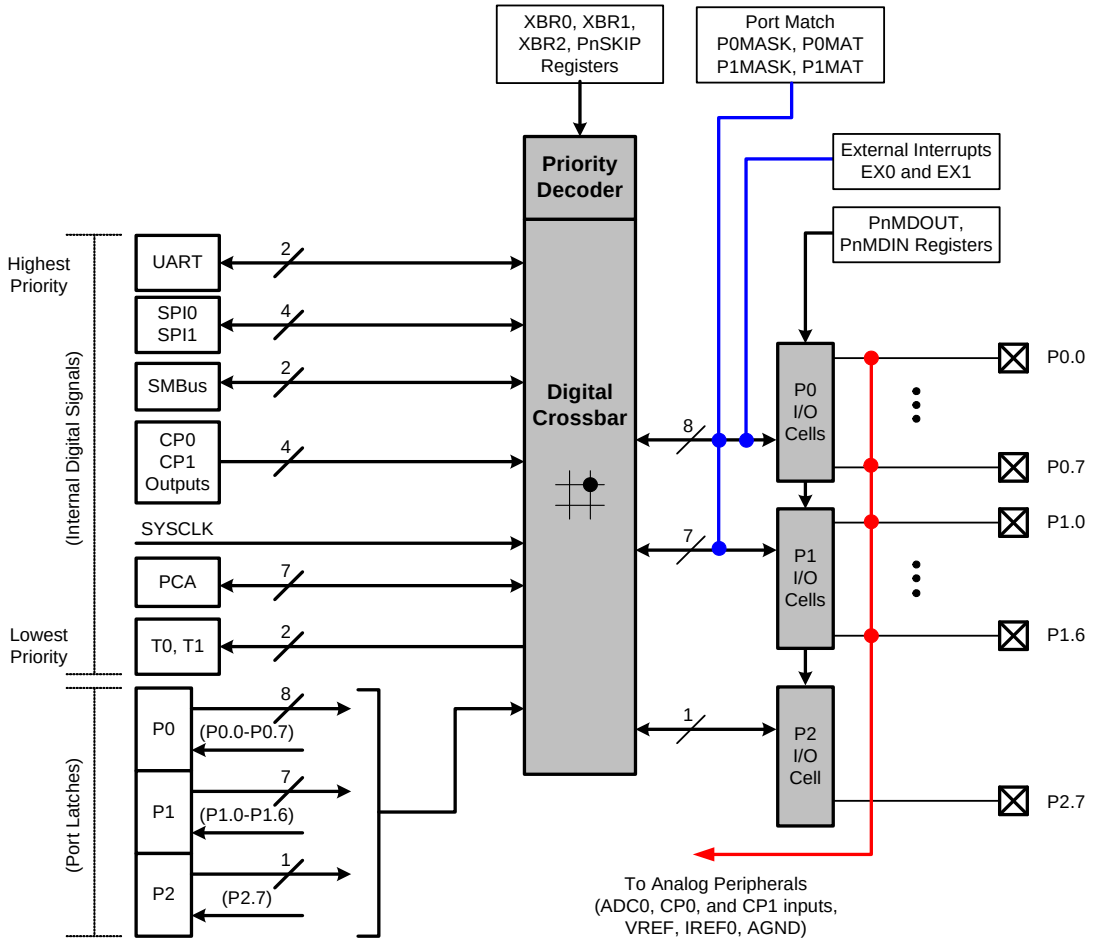

Figure 21.1. Port I/O Functional Block Diagram

21.1. Port I/O Modes of Operation

Port pins P0.0–P1.6 use the Port I/O cell shown in Figure 21.2. Each Port I/O cell can be configured by software for analog I/O or digital I/O using the PnMDIN registers. On reset, all Port I/O cells default to a digital high impedance state with weak pull-ups enabled.

21.1.1. Port Pins Configured for Analog I/O

Any pins to be used as Comparator or ADC input, external oscillator input/output, or AGND, VREF, or Current Reference output should be configured for analog I/O (PnMDIN.n = 0). When a pin is configured for analog I/O, its weak pullup and digital receiver are disabled. In most cases, software should also disable the digital output drivers. Port pins configured for analog I/O will always read back a value of 0 regardless of the actual voltage on the pin.

Configuring pins as analog I/O saves power and isolates the Port pin from digital interference. Port pins configured as digital inputs may still be used by analog peripherals; however, this practice is not recommended and may result in measurement errors.

21.1.2. Port Pins Configured For Digital I/O

Any pins to be used by digital peripherals (UART, SPI, SMBus, etc.), external digital event capture functions, or as GPIO should be configured as digital I/O (PnMDIN.n = 1). For digital I/O pins, one of two output modes (push-pull or open-drain) must be selected using the PnMDOUT registers.

Push-pull outputs (PnMDOUT.n = 1) drive the Port pad to the VDD/DC+ or GND supply rails based on the output logic value of the Port pin. Open-drain outputs have the high side driver disabled; therefore, they only drive the Port pad to GND when the output logic value is 0 and become high impedance inputs (both high and low drivers turned off) when the output logic value is 1.

When a digital I/O cell is placed in the high impedance state, a weak pull-up transistor pulls the Port pad to the VDD/DC+ supply voltage to ensure the digital input is at a defined logic state. Weak pull-ups are disabled when the I/O cell is driven to GND to minimize power consumption and may be globally disabled by setting WEAKPUD to 1. The user must ensure that digital I/O are always internally or externally pulled or driven to a valid logic state. Port pins configured for digital I/O always read back the logic state of the Port pad, regardless of the output logic value of the Port pin.

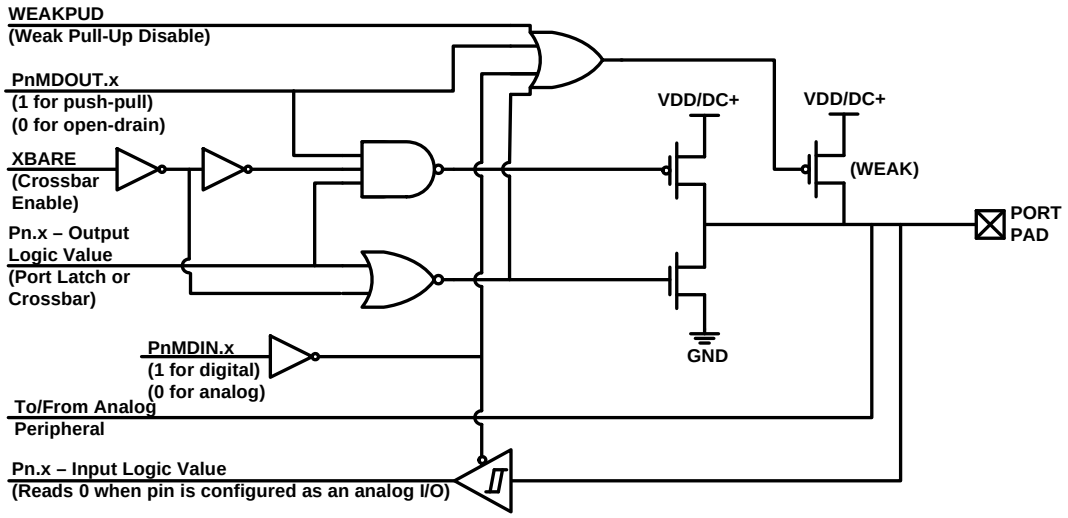

Figure 21.2. Port I/O Cell Block Diagram

21.1.3. Interfacing Port I/O to 5 V Logic

All Port I/O configured for digital, open-drain operation are capable of interfacing to digital logic operating at a supply voltage higher than VDD/DC+ and less than 5.25 V. An external pull-up resistor to the higher supply voltage is typically required for most systems.

Important Note: In a multi-voltage interface, the external pull-up resistor should be sized to allow a current of at least 150 µA to flow into the Port pin when the supply voltage is between (VDD/DC+ plus 0.4 V) and (VDD/DC+ plus 1.0 V). Once the Port pad voltage increases beyond this range, the current flowing into the Port pin is minimal.

21.1.4. Increasing Port I/O Drive Strength

Port I/O output drivers support a high and low drive strength; the default is low drive strength. The drive strength of a Port I/O can be configured using the PnDRV registers. See Section “4. Electrical Characteristics” on page 40 for the difference in output drive strength between the two modes.

21.2. Assigning Port I/O Pins to Analog and Digital Functions

Port I/O pins P0.0–P1.6 can be assigned to various analog, digital, and external interrupt functions. The Port pins assuaged to analog functions should be configured for analog I/O and Port pins assuaged to digital or external interrupt functions should be configured for digital I/O.

21.2.1. Assigning Port I/O Pins to Analog Functions

Table 21.1 shows all available analog functions that need Port I/O assignments. **Port pins selected for these analog functions should have their digital drivers disabled (PnMDOUT.n = 0 and Port Latch = 1) and their corresponding bit in PnSKIP set to 1.** This reserves the pin for use by the analog function and does not allow it to be claimed by the Crossbar. Table 21.1 shows the potential mapping of Port I/O to each analog function.

Table 21.1. Port I/O Assignment for Analog Functions

Analog Function	Potentially Assignable Port Pins	SFR(s) used for Assignment
ADC Input	P0.0–P1.6	ADC0MX, PnSKIP
Comparator0 Input	P0.0–P1.6	CPT0MX, PnSKIP
Comparator1 Input	P0.0–P1.6	CPT1MX, PnSKIP
Voltage Reference (VREF0)	P0.0	REF0CN, PnSKIP
Analog Ground Reference (AGND)	P0.1	REF0CN, PnSKIP
Current Reference (IREF0)	P0.7	IREF0CN, PnSKIP
External Oscillator Input (XTAL1)	P0.2	OSCXCN, PnSKIP
External Oscillator Output (XTAL2)	P0.3	OSCXCN, PnSKIP

21.2.2. Assigning Port I/O Pins to Digital Functions

Any Port pins not assigned to analog functions may be assigned to digital functions or used as GPIO. Most digital functions rely on the Crossbar for pin assignment; however, some digital functions bypass the Crossbar in a manner similar to the analog functions listed above. **Port pins used by these digital functions and any Port pins selected for use as GPIO should have their corresponding bit in PnSKIP set to 1.** Table 21.2 shows all available digital functions and the potential mapping of Port I/O to each digital function.

Table 21.2. Port I/O Assignment for Digital Functions

Digital Function	Potentially Assignable Port Pins	SFR(s) used for Assignment
UART0, SPI1, SPI0, SMBus, CP0 and CP1 Outputs, System Clock Output, PCA0, Timer0 and Timer1 External Inputs.	Any Port pin available for assignment by the Crossbar. This includes P0.0–P1.6 pins which have their PnSKIP bit set to 0. **Note:** The Crossbar will always assign UART0 and SPI1 pins to fixed locations.	XBR0, XBR1, XBR2
Any pin used for GPIO	P0.0–P1.6, P2.7	P0SKIP, P1SKIP

21.2.3. Assigning Port I/O Pins to External Digital Event Capture Functions

External digital event capture functions can be used to trigger an interrupt or wake the device from a low power mode when a transition occurs on a digital I/O pin. The digital event capture functions do not require dedicated pins and will function on both GPIO pins (PnSKIP = 1) and pins in use by the Crossbar (PnSKIP = 0). External digital even capture functions cannot be used on pins configured for analog I/O. Table 21.3 shows all available external digital event capture functions.

Table 21.3. Port I/O Assignment for External Digital Event Capture Functions

Digital Function	Potentially Assignable Port Pins	SFR(s) used for Assignment
External Interrupt 0	P0.0–P0.7	IT01CF
External Interrupt 1	P0.0–P0.7	IT01CF
Port Match	P0.0–P1.6	P0MASK, P0MAT P1MASK, P1MAT

21.3. Priority Crossbar Decoder

The Priority Crossbar Decoder assigns a Port I/O pin to each software selected digital function using the fixed peripheral priority order shown in Figure 21.3. The registers XBR0, XBR1, and XBR2 defined in SFR Definition 21.1, SFR Definition 21.2, and SFR Definition 21.3 are used to select digital functions in the Crossbar. The Port pins available for assignment by the Crossbar include all Port pins (P0.0–P1.6) which have their corresponding bit in PnSKIP set to 0.

From Figure 21.3, the highest priority peripheral is UART0. If UART0 is selected in the Crossbar (using the XBRn registers), then P0.4 and P0.5 will be assigned to UART0. The next highest priority peripheral is SPI1. If SPI1 is selected in the Crossbar, then P1.0–P1.3 will be assigned to SPI1. The user should ensure that the pins to be assigned by the Crossbar have their PnSKIP bits set to 0.

For all remaining digital functions selected in the Crossbar, starting at the top of Figure 21.3 going down, the least-significant unskipped, unassigned Port pin(s) are assigned to that function. If a Port pin is already assigned (e.g. UART0 or SPI1 pins), or if its PnSKIP bit is set to 1, then the Crossbar will skip over the pin and find next available unskipped, unassigned Port pin. All Port pins used for analog functions, GPIO, or dedicated digital functions such as the EMIF should have their PnSKIP bit set to 1.

Figure 21.3 shows the Crossbar Decoder priority with no Port pins skipped (P0SKIP, P1SKIP = 0x00); Figure 21.4 shows the Crossbar Decoder priority with the External Oscillator pins (XTAL1 and XTAL2) skipped (P0SKIP = 0x0C).

Notes:

- The Crossbar must be enabled (XBARE = 1) before any Port pin is used as a digital output. Port output drivers are disabled while the Crossbar is disabled.
- When SMBus is selected in the Crossbar, the pins associated with SDA and SCL will automatically be forced into open-drain output mode regardless of the PnMDOUT setting.
- SPI0 can be operated in either 3-wire or 4-wire modes, depending on the state of the NSSMD1-NSSMD0 bits in register SPI0CN. The NSS signal is only routed to a Port pin when 4-wire mode is selected. When SPI0 is selected in the Crossbar, the SPI0 mode (3-wire or 4-wire) will affect the pinout of all digital functions lower in priority than SPI0.
- For given XBRn, PnSKIP, and SPInCN register settings, one can determine the I/O pin-out of the device using Figure 21.3 and Figure 21.4.

	P0								P1							P2	
SF Signals	VREF	AGND	XTAL1	XTAL2			CNVSTR	IREF0									C2D
PIN I/O	0	1	2	3	4	5	6	7	0	1	2	3	4	5	6		7
TX0					■												
RX0						■											
SCK (SPI1)									■								
MISO (SPI1)										■							
MOSI (SPI1)											■						
NSS* (SPI1)												■	(*4-Wire SPI Only)				
SCK (SPI0)	■																
MISO (SPI0)		■															
MOSI (SPI0)			■														
NSS* (SPI0)				■					(*4-Wire SPI Only)								
SDA	■			■	■		■										
SCL		■			■	■		■									
CP0	■		■	■		■	■	■	■			■	■				
CP0A	■	■	■	■	■	■	■	■	■	■		■	■	■			
CP1	■	■	■	■	■	■	■	■	■	■	■	■	■	■	■		
CP1A	■	■	■	■	■	■	■	■	■	■	■	■	■	■	■		
/SYSCLK	■	■	■	■	■	■	■	■	■	■	■	■	■	■	■		
CEX0	■	■	■	■	■	■	■	■	■	■	■	■	■	■	■		
CEX1	■	■	■	■	■	■	■	■	■	■	■	■	■	■	■		
CEX2	■	■	■	■	■	■	■	■	■	■	■	■	■	■	■		
CEX3	■	■	■	■	■	■	■	■	■	■	■	■	■	■	■		
CEX4	■	■	■	■	■	■	■	■	■	■	■	■	■	■	■		
CEX5	■	■	■	■	■	■	■	■	■	■	■	■	■	■	■		
ECI	■	■	■	■	■	■	■	■	■	■	■	■	■	■	■		
T0	■	■	■	■	■	■	■	■	■	■	■	■	■	■	■		
T1	■	■	■	■	■	■	■	■	■	■	■	■	■	■	■		
	0	0	0	0	0	0	0	0	0	0	0	0	0	0	0	X	
	P0SKIP[0:7]								P1SKIP[0:7]								

Figure 21.3. Crossbar Priority Decoder with No Pins Skipped

	P0								P1							P2	
SF Signals	VREF	AGND	XTAL1	XTAL2			CNVSTR	IREF0									C2D
PIN I/O	0	1	2	3	4	5	6	7	0	1	2	3	4	5	6		7
TX0					■												
RX0						■											
SCK (SPI1)									■								
MISO (SPI1)										■							
MOSI (SPI1)											■						
NSS* (SPI1)												■	(*4-Wire SPI Only)				
SCK (SPI0)	■																
MISO (SPI0)		■															
MOSI (SPI0)					■		■										
NSS* (SPI0)						■		■	(*4-Wire SPI Only)								
SDA	■				■	■	■	■	■			■	■				
SCL		■				■	■	■	■	■			■	■			
CP0	■	■			■	■	■	■	■	■	■		■	■	■		
CP0A	■	■			■	■	■	■	■	■	■	■	■	■	■		
CP1	■	■			■	■	■	■	■	■	■	■	■	■	■		
CP1A	■	■			■	■	■	■	■	■	■	■	■	■	■		
/SYSCLK	■	■			■	■	■	■	■	■	■	■	■	■	■		
CEX0	■	■			■	■	■	■	■	■	■	■	■	■	■		
CEX1	■	■			■	■	■	■	■	■	■	■	■	■	■		
CEX2	■	■			■	■	■	■	■	■	■	■	■	■	■		
CEX3	■	■			■	■	■	■	■	■	■	■	■	■	■		
CEX4	■	■			■	■	■	■	■	■	■	■	■	■	■		
CEX5	■	■			■	■	■	■	■	■	■	■	■	■	■		
ECI	■	■			■	■	■	■	■	■	■	■	■	■	■		
T0	■	■			■	■	■	■	■	■	■	■	■	■	■		
T1	■	■			■	■	■	■	■	■	■	■	■	■	■		
	0	0	1	1	0	0	0	0	0	0	0	0	0	0	0	X	
	P0SKIP[0:7]								P1SKIP[0:7]								

Figure 21.4. Crossbar Priority Decoder with Crystal Pins Skipped

SFR Definition 21.1. XBR0: Port I/O Crossbar Register 0

Bit	7	6	5	4	3	2	1	0
Name	CP1AE	CP1E	CP0AE	CP0E	SYSCKE	SMB0E	SPI0E	URT0E
Type	R/W	R/W	R/W	R/W	R/W	R/W	R/W	R/W
Reset	0	0	0	0	0	0	0	0

SFR Page = 0x0; SFR Address = 0xE1

Bit	Name	Function
7	CP1AE	**Comparator1 Asynchronous Output Enable.** 0: Asynchronous CP1 output unavailable at Port pin. 1: Asynchronous CP1 output routed to Port pin.
6	CP1E	**Comparator1 Output Enable.** 0: CP1 output unavailable at Port pin. 1: CP1 output routed to Port pin.
5	CP0AE	**Comparator0 Asynchronous Output Enable.** 0: Asynchronous CP0 output unavailable at Port pin. 1: Asynchronous CP0 output routed to Port pin.
4	CP0E	**Comparator0 Output Enable.** 0: CP1 output unavailable at Port pin. 1: CP1 output routed to Port pin.
3	SYSCKE	**$\overline{\text{SYSCLK}}$ Output Enable.** 0: $\overline{\text{SYSCLK}}$ output unavailable at Port pin. 1: $\overline{\text{SYSCLK}}$ output routed to Port pin.
2	SMB0E	**SMBus I/O Enable.** 0: SMBus I/O unavailable at Port pin. 1: SDA and SCL routed to Port pins.
1	SPI0E	**SPI0 I/O Enable.** 0: SPI0 I/O unavailable at Port pin. 1: SCK, MISO, and MOSI (for SPI0) routed to Port pins. NSS (for SPI0) routed to Port pin only if SPI0 is configured to 4-wire mode.
0	URT0E	**UART0 Output Enable.** 0: UART I/O unavailable at Port pin. 1: TX0 and RX0 routed to Port pins P0.4 and P0.5.
Note: SPI0 can be assigned either 3 or 4 Port I/O pins.		

SFR Definition 21.2. XBR1: Port I/O Crossbar Register 1

Bit	7	6	5	4	3	2	1	0
Name		SPI1E	T1E	T0E	ECIE	PCA0ME[2:0]		
Type	R/W	R/W	R/W	R/W	R/W	R/W	R/W	R/W
Reset	0	0	0	0	0	0	0	0

SFR Page = 0x0; SFR Address = 0xE2

Bit	Name	Function
7	Unused	**Unused.** Read = 0b; Write = Don't Care.
6	SPI1E	**SPI1 I/O Enable.** 0: SPI0 I/O unavailable at Port pin. 1: SCK (for SPI1) routed to P1.0. MISO (for SPI1) routed to P1.1. MOSI (for SPI1) routed to P1.2. NSS (for SPI1) routed to P1.3 only if SPI1 is configured to 4-wire mode.
5	T1E	**Timer1 Input Enable.** 0: T1 input unavailable at Port pin. 1: T1 input routed to Port pin.
4	T0E	**Timer0 Input Enable.** 0: T0 input unavailable at Port pin. 1: T0 input routed to Port pin.
3	ECIE	**PCA0 External Counter Input (ECI) Enable.** 0: PCA0 external counter input unavailable at Port pin. 1: PCA0 external counter input routed to Port pin.
2:0	PCA0ME	**PCA0 Module I/O Enable.** 000: All PCA0 I/O unavailable at Port pin. 001: CEX0 routed to Port pin. 010: CEX0, CEX1 routed to Port pins. 011: CEX0, CEX1, CEX2 routed to Port pins. 100: CEX0, CEX1, CEX2 CEX3 routed to Port pins. 101: CEX0, CEX1, CEX2, CEX3, CEX4 routed to Port pins. 110: CEX0, CEX1, CEX2, CEX3, CEX4, CEX5 routed to Port pins. 111: Reserved.
Note: SPI1 can be assigned either 3 or 4 Port I/O pins.		

SFR Definition 21.3. XBR2: Port I/O Crossbar Register 2

Bit	7	6	5	4	3	2	1	0
Name	WEAKPUD	XBARE						
Type	R/W	R/W	R/W	R/W	R/W	R/W	R/W	R/W
Reset	0	0	0	0	0	0	0	0

SFR Page = 0x0; SFR Address = 0xE3

Bit	Name	Function
7	WEAKPUD	**Port I/O Weak Pullup Disable.** 0: Weak Pullups enabled (except for Port I/O pins configured for analog mode).
6	XBARE	**Crossbar Enable.** 0: Crossbar disabled. 1: Crossbar enabled.
5:0	Unused	**Unused.** Read = 000000b; Write = Don't Care.
Note: The Crossbar must be enabled (XBARE = 1) to use any Port pin as a digital output.		

21.4. Port Match

Port match functionality allows system events to be triggered by a logic value change on P0 or P1. A software controlled value stored in the PnMAT registers specifies the expected or normal logic values of P0 and P1. A Port mismatch event occurs if the logic levels of the Port's input pins no longer match the software controlled value. This allows Software to be notified if a certain change or pattern occurs on P0 or P1 input pins regardless of the XBRn settings.

The PnMASK registers can be used to individually select which P0 and P1 pins should be compared against the PnMAT registers. A Port mismatch event is generated if (P0 & P0MASK) does not equal (PnMAT & P0MASK) or if (P1 & P1MASK) does not equal (PnMAT & P1MASK).

A Port mismatch event may be used to generate an interrupt or wake the device from a low power mode. See Section "12. Interrupt Handler" on page 126 and Section "14. Power Management" on page 149 for more details on interrupt and wake-up sources.

SFR Definition 21.4. P0MASK: Port0 Mask Register

Bit	7	6	5	4	3	2	1	0
Name	P0MASK[7:0]							
Type	R/W							
Reset	0	0	0	0	0	0	0	0

SFR Page= 0x0; SFR Address = 0xC7

Bit	Name	Function
7:0	P0MASK[7:0]	**Port0 Mask Value.** Selects the P0 pins to be compared with the corresponding bits in P0MAT. 0: P0.n pin pad logic value is ignored and cannot cause a Port Mismatch event. 1: P0.n pin pad logic value is compared to P0MAT.n.

SFR Definition 21.5. P0MAT: Port0 Match Register

Bit	7	6	5	4	3	2	1	0
Name	P0MAT[7:0]							
Type	R/W							
Reset	1	1	1	1	1	1	1	1

SFR Page= 0x0; SFR Address = 0xD7

7:0	P0MAT[7:0]	**Port 0 Match Value.** Match comparison value used on Port 0 for bits in P0MASK which are set to 1. 0: P0.n pin logic value is compared with logic LOW. 1: P0.n pin logic value is compared with logic HIGH.

SFR Definition 21.6. P1MASK: Port1 Mask Register

Bit	7	6	5	4	3	2	1	0
Name	P1MASK[7:0]							
Type	R/W							
Reset	0	0	0	0	0	0	0	0

SFR Page= 0x0; SFR Address = 0xBF

Bit	Name	Function
7:0	P1MASK[7:0]	**Port 1 Mask Value.** Selects P1 pins to be compared to the corresponding bits in P1MAT. 0: P1.n pin logic value is ignored and cannot cause a Port Mismatch event. 1: P1.n pin logic value is compared to P1MAT.n.

SFR Definition 21.7. P1MAT: Port1 Match Register

Bit	7	6	5	4	3	2	1	0
Name	P1MAT[7:0]							
Type	R/W							
Reset	1	1	1	1	1	1	1	1

SFR Page = 0x0; SFR Address = 0xCF

Bit	Name	Function
7:0	P1MAT[7:0]	**Port 1 Match Value.** Match comparison value used on Port 1 for bits in P1MASK which are set to 1. 0: P1.n pin logic value is compared with logic LOW. 1: P1.n pin logic value is compared with logic HIGH.

21.5. Special Function Registers for Accessing and Configuring Port I/O

All Port I/O are accessed through corresponding special function registers (SFRs) that are both byte addressable and bit addressable. When writing to a Port, the value written to the SFR is latched to maintain the output data value at each pin. When reading, the logic levels of the Port's input pins are returned regardless of the XBRn settings (i.e., even when the pin is assigned to another signal by the Crossbar, the Port register can always read its corresponding Port I/O pin). The exception to this is the execution of the read-modify-write instructions that target a Port Latch register as the destination. The read-modify-write instructions when operating on a Port SFR are the following: ANL, ORL, XRL, JBC, CPL, INC, DEC, DJNZ and MOV, CLR or SETB, when the destination is an individual bit in a Port SFR. For these instructions, the value of the latch register (not the pin) is read, modified, and written back to the SFR.

Each Port has a corresponding PnSKIP register which allows its individual Port pins to be assigned to digital functions or skipped by the Crossbar. All Port pins used for analog functions, GPIO, or dedicated digital functions such as the EMIF should have their PnSKIP bit set to 1.

The Port input mode of the I/O pins is defined using the Port Input Mode registers (PnMDIN). Each Port cell can be configured for analog or digital I/O. This selection is required even for the digital resources selected in the XBRn registers, and is not automatic. The only exception to this is P2.7, which can only be used for digital I/O.

The output driver characteristics of the I/O pins are defined using the Port Output Mode registers (PnMDOUT). Each Port Output driver can be configured as either open drain or push-pull. This selection is required even for the digital resources selected in the XBRn registers, and is not automatic. The only exception to this is the SMBus (SDA, SCL) pins, which are configured as open-drain regardless of the PnMDOUT settings.

The drive strength of the output drivers are controlled by the Port Drive Strength (PnDRV) registers. The default is low drive strength. See Section “4. Electrical Characteristics” on page 40 for the difference in output drive strength between the two modes.

SFR Definition 21.8. P0: Port0

Bit	7	6	5	4	3	2	1	0
Name	P0[7:0]							
Type	R/W							
Reset	1	1	1	1	1	1	1	1

SFR Page = All Pages; SFR Address = 0x80; Bit-Addressable

Bit	Name	Description	Write	Read
7:0	P0[7:0]	**Port 0 Data.** Sets the Port latch logic value or reads the Port pin logic state in Port cells configured for digital I/O.	0: Set output latch to logic LOW. 1: Set output latch to logic HIGH.	0: P0.n Port pin is logic LOW. 1: P0.n Port pin is logic HIGH.

SFR Definition 21.9. P0SKIP: Port0 Skip

Bit	7	6	5	4	3	2	1	0
Name	P0SKIP[7:0]							
Type	R/W							
Reset	0	0	0	0	0	0	0	0

SFR Page= 0x0; SFR Address = 0xD4

Bit	Name	Function
7:0	P0SKIP[7:0]	**Port 0 Crossbar Skip Enable Bits.** These bits select Port 0 pins to be skipped by the Crossbar Decoder. Port pins used for analog, special functions or GPIO should be skipped by the Crossbar. 0: Corresponding P0.n pin is not skipped by the Crossbar. 1: Corresponding P0.n pin is skipped by the Crossbar.

SFR Definition 21.10. P0MDIN: Port0 Input Mode

Bit	7	6	5	4	3	2	1	0
Name	P0MDIN[7:0]							
Type	R/W							
Reset	1	1	1	1	1	1	1	1

SFR Page= 0x0; SFR Address = 0xF1

Bit	Name	Function
7:0	P0MDIN[7:0]	**Analog Configuration Bits for P0.7–P0.0 (respectively).** Port pins configured for analog mode have their weak pullup, and digital receiver disabled. The digital driver is not explicitly disabled. 0: Corresponding P0.n pin is configured for analog mode. 1: Corresponding P0.n pin is not configured for analog mode.

SFR Definition 21.11. P0MDOUT: Port0 Output Mode

Bit	7	6	5	4	3	2	1	0
Name	P0MDOUT[7:0]							
Type	R/W							
Reset	0	0	0	0	0	0	0	0

SFR Page = 0x0; SFR Address = 0xA4

Bit	Name	Function
7:0	P0MDOUT[7:0]	**Output Configuration Bits for P0.7–P0.0 (respectively).** These bits control the digital driver even when the corresponding bit in register P0MDIN is logic 0. 0: Corresponding P0.n Output is open-drain. 1: Corresponding P0.n Output is push-pull.

SFR Definition 21.12. P0DRV: Port0 Drive Strength

Bit	7	6	5	4	3	2	1	0
Name	P0DRV[7:0]							
Type	R/W							
Reset	0	0	0	0	0	0	0	0

SFR Page = 0xF; SFR Address = 0xA4

Bit	Name	Function
7:0	P0DRV[7:0]	**Drive Strength Configuration Bits for P0.7–P0.0 (respectively).** Configures digital I/O Port cells to high or low output drive strength. 0: Corresponding P0.n Output has low output drive strength. 1: Corresponding P0.n Output has high output drive strength.

SFR Definition 21.13. P1: Port1

Bit	7	6	5	4	3	2	1	0
Name		P1[6:0]						
Type		R/W						
Reset	0	1	1	1	1	1	1	1

SFR Page = All Pages; SFR Address = 0x90; Bit-Addressable

Bit	Name	Description	Write	Read
7	Unused	**Unused.** Read =0b; Write = Don't Care.		
6:0	P1[6:0]	**Port 1 Data.** Sets the Port latch logic value or reads the Port pin logic state in Port cells configured for digital I/O.	0: Set output latch to logic LOW. 1: Set output latch to logic HIGH.	0: P1.n Port pin is logic LOW. 1: P1.n Port pin is logic HIGH.

SFR Definition 21.14. P1SKIP: Port1 Skip

Bit	7	6	5	4	3	2	1	0
Name		P1SKIP[6:0]						
Type		R/W						
Reset	0	0	0	0	0	0	0	0

SFR Page = 0x0; SFR Address = 0xD5

Bit	Name	Function
7	Unused	**Unused.** Read =0b; Write = Don't Care.
6:0	P1SKIP[6:0]	**Port 1 Crossbar Skip Enable Bits.** These bits select Port 1 pins to be skipped by the Crossbar Decoder. Port pins used for analog, special functions or GPIO should be skipped by the Crossbar. 0: Corresponding P1.n pin is not skipped by the Crossbar. 1: Corresponding P1.n pin is skipped by the Crossbar.

SFR Definition 21.15. P1MDIN: Port1 Input Mode

Bit	7	6	5	4	3	2	1	0
Name		P1MDIN[6:0]						
Type		R/W						
Reset	1	1	1	1	1	1	1	1

SFR Page = 0x0; SFR Address = 0xF2

Bit	Name	Function
7	Unused	**Unused.** Read =0b; Write = Don't Care.
6:0	P1MDIN[6:0]	**Analog Configuration Bits for P1.6–P1.0 (respectively).** Port pins configured for analog mode have their weak pullup and digital receiver disabled. The digital driver is not explicitly disabled. 0: Corresponding P1.n pin is configured for analog mode. 1: Corresponding P1.n pin is not configured for analog mode.

SFR Definition 21.16. P1MDOUT: Port1 Output Mode

Bit	7	6	5	4	3	2	1	0
Name		P1MDOUT[6:0]						
Type		R/W						
Reset	0	0	0	0	0	0	0	0

SFR Page = 0x0; SFR Address = 0xA5

Bit	Name	Function
7	Unused	**Unused.** Read =0b; Write = Don't Care.
6:0	P1MDOUT[6:0]	**Output Configuration Bits for P1.6–P1.0 (respectively).** These bits control the digital driver even when the corresponding bit in register P1MDIN is logic 0. 0: Corresponding P1.n Output is open-drain. 1: Corresponding P1.n Output is push-pull.

SFR Definition 21.17. P1DRV: Port1 Drive Strength

Bit	7	6	5	4	3	2	1	0
Name		P1DRV[6:0]						
Type		R/W						
Reset	0	0	0	0	0	0	0	0

SFR Page = 0xF; SFR Address = 0xA5

Bit	Name	Function
7	Unused	**Unused.** Read =0b; Write = Don't Care.
6:0	P1DRV[6:0]	**Drive Strength Configuration Bits for P1.6–P1.0 (respectively).** Configures digital I/O Port cells to high or low output drive strength. 0: Corresponding P1.n Output has low output drive strength. 1: Corresponding P1.n Output has high output drive strength.

SFR Definition 21.18. P2: Port2

Bit	7	6	5	4	3	2	1	0
Name	P2							
Type	R/W							
Reset	1	0	0	0	0	0	0	0

SFR Page = All Pages; SFR Address = 0xA0; Bit-Addressable

Bit	Name	Description	Read	Write
7	P2	**Port 2 Data.** Sets the Port latch logic value or reads the Port pin logic state in Port cells configured for digital I/O.	0: Set output latch to logic LOW. 1: Set output latch to logic HIGH.	0: P2.7 Port pin is logic LOW. 1: P2.7 Port pin is logic HIGH.
6:0	Unused	**Unused.** Read = 0000000b; Write = Don't Care.		

SFR Definition 21.19. P2MDOUT: Port2 Output Mode

Bit	7	6	5	4	3	2	1	0
Name	P2MDOUT							
Type	R/W							
Reset	0	0	0	0	0	0	0	0

SFR Page = 0x0; SFR Address = 0xA6

Bit	Name	Function
7	P2MDOUT	**Output Configuration Bits for P2.7.** These bits control the digital driver. 0: P2.7 Output is open-drain. 1: P2.7 Output is push-pull.
6:0	Unused	**Unused.** Read = 0000000b; Write = Don't Care.

SFR Definition 21.20. P2DRV: Port2 Drive Strength

Bit	7	6	5	4	3	2	1	0
Name	P2DRV							
Type	R/W							
Reset	0	0	0	0	0	0	0	0

SFR Page = 0x0F; SFR Address = 0xA6

Bit	Name	Function
7	P2DRV	**Drive Strength Configuration Bits for P2.7.** Configures digital I/O Port cells to high or low output drive strength. 0: P2.7 Output has low output drive strength. 1: P2.7 Output has high output drive strength.
6:0	Unused	**Unused.** Read = 0000000b; Write = Don't Care.

22. SMBus

The SMBus I/O interface is a two-wire, bi-directional serial bus. The SMBus is compliant with the System Management Bus Specification, version 1.1, and compatible with the I^2C serial bus. Reads and writes to the interface by the system controller are byte oriented with the SMBus interface autonomously controlling the serial transfer of the data. Data can be transferred at up to 1/20th of the system clock as a master or slave (this can be faster than allowed by the SMBus specification, depending on the system clock used). A method of extending the clock-low duration is available to accommodate devices with different speed capabilities on the same bus.

The SMBus interface may operate as a master and/or slave, and may function on a bus with multiple masters. The SMBus provides control of SDA (serial data), SCL (serial clock) generation and synchronization, arbitration logic, and START/STOP control and generation. The SMBus peripheral can be fully driven by software (i.e. software accepts/rejects slave addresses, and generates ACKs), or hardware slave address recognition and automatic ACK generation can be enabled to minimize software overhead. A block diagram of the SMBus peripheral and the associated SFRs is shown in Figure 22.1.

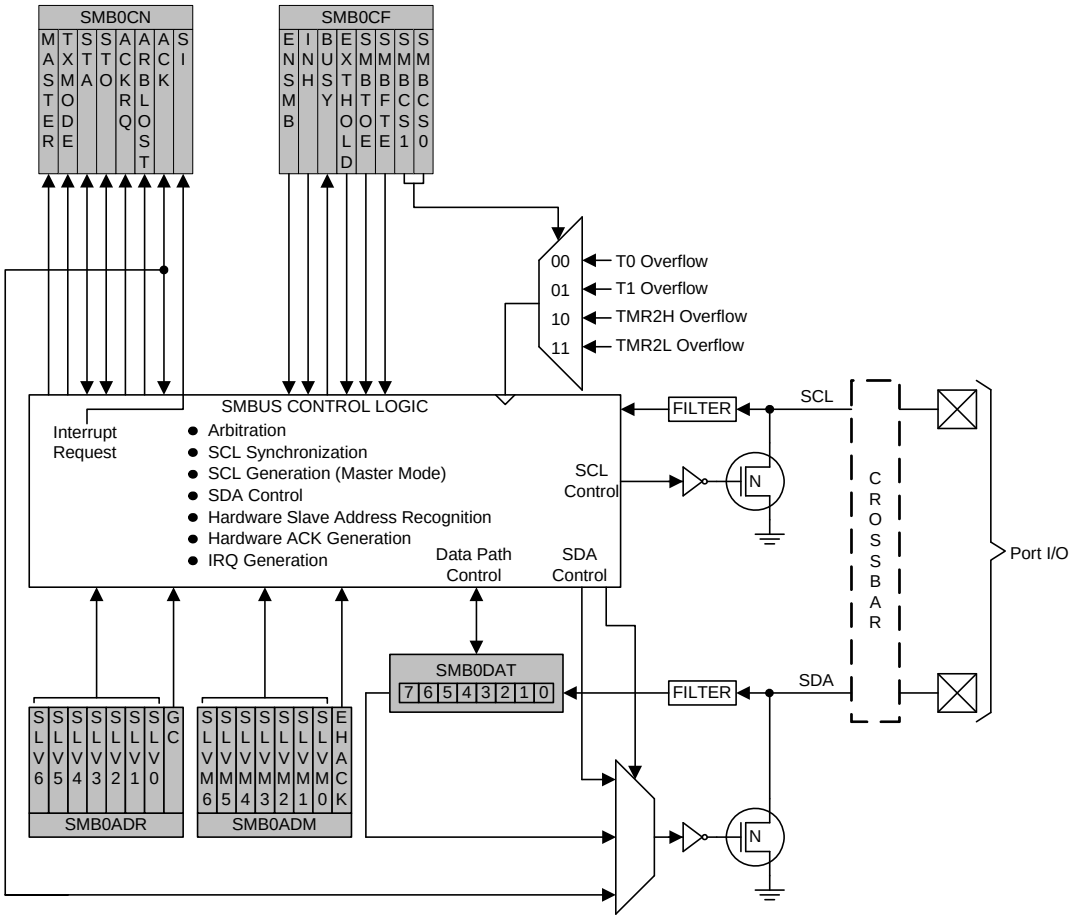

Figure 22.1. SMBus Block Diagram

22.1. Supporting Documents

It is assumed the reader is familiar with or has access to the following supporting documents:

1. The I^2C-Bus and How to Use It (including specifications), Philips Semiconductor.
2. The I^2C-Bus Specification—Version 2.0, Philips Semiconductor.
3. System Management Bus Specification—Version 1.1, SBS Implementers Forum.

22.2. SMBus Configuration

Figure 22.2 shows a typical SMBus configuration. The SMBus specification allows any recessive voltage between 3.0 V and 5.0 V; different devices on the bus may operate at different voltage levels. The bi-directional SCL (serial clock) and SDA (serial data) lines must be connected to a positive power supply voltage through a pullup resistor or similar circuit. Every device connected to the bus must have an open-drain or open-collector output for both the SCL and SDA lines, so that both are pulled high (recessive state) when the bus is free. The maximum number of devices on the bus is limited only by the requirement that the rise and fall times on the bus not exceed 300 ns and 1000 ns, respectively.

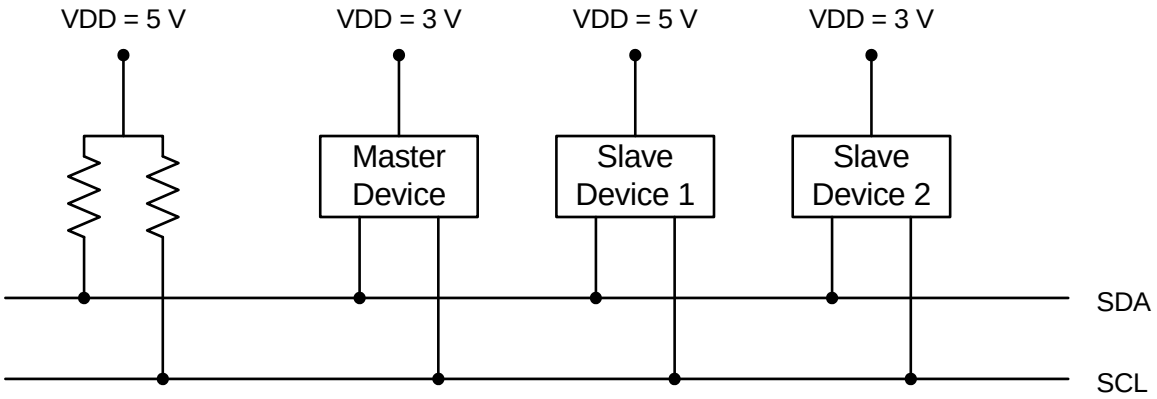

Figure 22.2. Typical SMBus Configuration

22.3. SMBus Operation

Two types of data transfers are possible: data transfers from a master transmitter to an addressed slave receiver (WRITE), and data transfers from an addressed slave transmitter to a master receiver (READ). The master device initiates both types of data transfers and provides the serial clock pulses on SCL. The SMBus interface may operate as a master or a slave, and multiple master devices on the same bus are supported. If two or more masters attempt to initiate a data transfer simultaneously, an arbitration scheme is employed with a single master always winning the arbitration. Note that it is not necessary to specify one device as the Master in a system; any device who transmits a START and a slave address becomes the master for the duration of that transfer.

A typical SMBus transaction consists of a START condition followed by an address byte (Bits7–1: 7-bit slave address; Bit0: R/W direction bit), one or more bytes of data, and a STOP condition. Bytes that are received (by a master or slave) are acknowledged (ACK) with a low SDA during a high SCL (see Figure 22.3). If the receiving device does not ACK, the transmitting device will read a NACK (not acknowledge), which is a high SDA during a high SCL.

The direction bit (R/W) occupies the least-significant bit position of the address byte. The direction bit is set to logic 1 to indicate a "READ" operation and cleared to logic 0 to indicate a "WRITE" operation.

All transactions are initiated by a master, with one or more addressed slave devices as the target. The master generates the START condition and then transmits the slave address and direction bit. If the transaction is a WRITE operation from the master to the slave, the master transmits the data a byte at a time waiting for an ACK from the slave at the end of each byte. For READ operations, the slave transmits the data waiting for an ACK from the master at the end of each byte. At the end of the data transfer, the master generates a STOP condition to terminate the transaction and free the bus. Figure 22.3 illustrates a typical SMBus transaction.

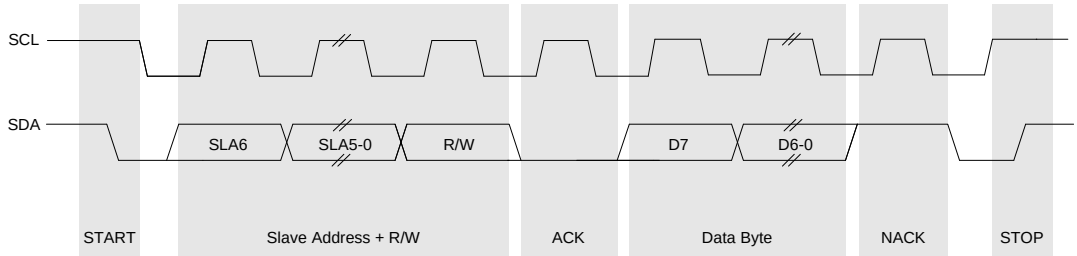

Figure 22.3. SMBus Transaction

22.3.1. Transmitter Vs. Receiver

On the SMBus communications interface, a device is the “transmitter” when it is sending an address or data byte to another device on the bus. A device is a “receiver” when an address or data byte is being sent to it from another device on the bus. The transmitter controls the SDA line during the address or data byte. After each byte of address or data information is sent by the transmitter, the receiver sends an ACK or NACK bit during the ACK phase of the transfer, during which time the receiver controls the SDA line.

22.3.2. Arbitration

A master may start a transfer only if the bus is free. The bus is free after a STOP condition or after the SCL and SDA lines remain high for a specified time (see Section “22.3.5. SCL High (SMBus Free) Timeout” on page 237). In the event that two or more devices attempt to begin a transfer at the same time, an arbitration scheme is employed to force one master to give up the bus. The master devices continue transmitting until one attempts a HIGH while the other transmits a LOW. Since the bus is open-drain, the bus will be pulled LOW. The master attempting the HIGH will detect a LOW SDA and lose the arbitration. The winning

master continues its transmission without interruption; the losing master becomes a slave and receives the rest of the transfer if addressed. This arbitration scheme is non-destructive: one device always wins, and no data is lost.

22.3.3. Clock Low Extension

SMBus provides a clock synchronization mechanism, similar to I^2C, which allows devices with different speed capabilities to coexist on the bus. A clock-low extension is used during a transfer in order to allow slower slave devices to communicate with faster masters. The slave may temporarily hold the SCL line LOW to extend the clock low period, effectively decreasing the serial clock frequency.

22.3.4. SCL Low Timeout

If the SCL line is held low by a slave device on the bus, no further communication is possible. Furthermore, the master cannot force the SCL line high to correct the error condition. To solve this problem, the SMBus protocol specifies that devices participating in a transfer must detect any clock cycle held low longer than 25 ms as a “timeout” condition. Devices that have detected the timeout condition must reset the communication no later than 10 ms after detecting the timeout condition.

When the SMBTOE bit in SMB0CF is set, Timer 3 is used to detect SCL low timeouts. Timer 3 is forced to reload when SCL is high, and allowed to count when SCL is low. With Timer 3 enabled and configured to overflow after 25 ms (and SMBTOE set), the Timer 3 interrupt service routine can be used to reset (disable and re-enable) the SMBus in the event of an SCL low timeout.

22.3.5. SCL High (SMBus Free) Timeout

The SMBus specification stipulates that if the SCL and SDA lines remain high for more that 50 µs, the bus is designated as free. When the SMBFTE bit in SMB0CF is set, the bus will be considered free if SCL and SDA remain high for more than 10 SMBus clock source periods (as defined by the timer configured for the SMBus clock source). If the SMBus is waiting to generate a Master START, the START will be generated following this timeout. Note that a clock source is required for free timeout detection, even in a slave-only implementation.

22.4. Using the SMBus

The SMBus can operate in both Master and Slave modes. The interface provides timing and shifting control for serial transfers; higher level protocol is determined by user software. The SMBus interface provides the following application-independent features:

- Byte-wise serial data transfers
- Clock signal generation on SCL (Master Mode only) and SDA data synchronization
- Timeout/bus error recognition, as defined by the SMB0CF configuration register
- START/STOP timing, detection, and generation
- Bus arbitration
- Interrupt generation
- Status information
- Optional hardware recognition of slave address and automatic acknowledgement of address/data

SMBus interrupts are generated for each data byte or slave address that is transferred. When hardware acknowledgement is disabled, the point at which the interrupt is generated depends on whether the hardware is acting as a data transmitter or receiver. When a transmitter (i.e. sending address/data, receiving an ACK), this interrupt is generated after the ACK cycle so that software may read the received ACK value; when receiving data (i.e. receiving address/data, sending an ACK), this interrupt is generated before the ACK cycle so that software may define the outgoing ACK value. If hardware acknowledgement is enabled, these interrupts are always generated after the ACK cycle. See Section 22.5 for more details on transmission sequences.

Interrupts are also generated to indicate the beginning of a transfer when a master (START generated), or the end of a transfer when a slave (STOP detected). Software should read the SMB0CN (SMBus Control register) to find the cause of the SMBus interrupt. The SMB0CN register is described in Section 22.4.2; Table 22.5 provides a quick SMB0CN decoding reference.

22.4.1. SMBus Configuration Register

The SMBus Configuration register (SMB0CF) is used to enable the SMBus Master and/or Slave modes, select the SMBus clock source, and select the SMBus timing and timeout options. When the ENSMB bit is set, the SMBus is enabled for all master and slave events. Slave events may be disabled by setting the INH bit. With slave events inhibited, the SMBus interface will still monitor the SCL and SDA pins; however, the interface will NACK all received addresses and will not generate any slave interrupts. When the INH bit is set, all slave events will be inhibited following the next START (interrupts will continue for the duration of the current transfer).

Table 22.1. SMBus Clock Source Selection

SMBCS1	SMBCS0	SMBus Clock Source
0	0	Timer 0 Overflow
0	1	Timer 1 Overflow
1	0	Timer 2 High Byte Overflow
1	1	Timer 2 Low Byte Overflow

The SMBCS1–0 bits select the SMBus clock source, which is used only when operating as a master or when the Free Timeout detection is enabled. When operating as a master, overflows from the selected source determine the absolute minimum SCL low and high times as defined in Equation 22.1. Note that the selected clock source may be shared by other peripherals so long as the timer is left running at all times. For example, Timer 1 overflows may generate the SMBus and UART baud rates simultaneously. Timer configuration is covered in Section “25. Timers” on page 279.

$$T_{HighMin} = T_{LowMin} = \frac{1}{f_{ClockSourceOverflow}}$$

Equation 22.1. Minimum SCL High and Low Times

The selected clock source should be configured to establish the minimum SCL High and Low times as per Equation 22.1. When the interface is operating as a master (and SCL is not driven or extended by any other devices on the bus), the typical SMBus bit rate is approximated by Equation 22.2.

$$BitRate = \frac{f_{ClockSourceOverflow}}{3}$$

Equation 22.2. Typical SMBus Bit Rate

Figure 22.4 shows the typical SCL generation described by Equation 22.2. Notice that T_{HIGH} is typically twice as large as T_{LOW}. The actual SCL output may vary due to other devices on the bus (SCL may be extended low by slower slave devices, or driven low by contending master devices). The bit rate when operating as a master will never exceed the limits defined by equation Equation 22.1.

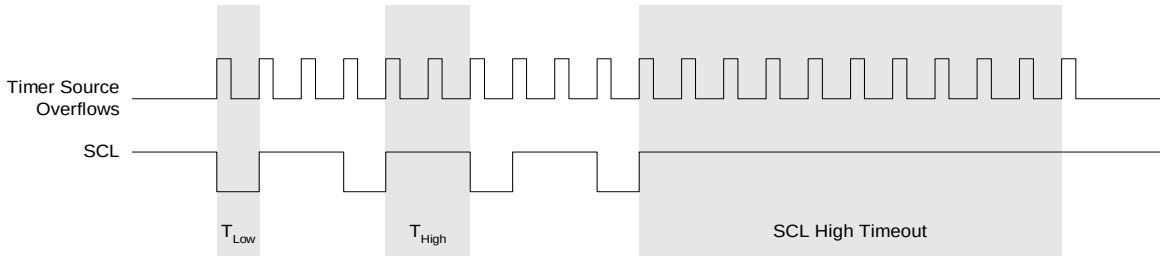

Figure 22.4. Typical SMBus SCL Generation

Setting the EXTHOLD bit extends the minimum setup and hold times for the SDA line. The minimum SDA setup time defines the absolute minimum time that SDA is stable before SCL transitions from low-to-high. The minimum SDA hold time defines the absolute minimum time that the current SDA value remains stable after SCL transitions from high-to-low. EXTHOLD should be set so that the minimum setup and hold times meet the SMBus Specification requirements of 250 ns and 300 ns, respectively. Table 22.2 shows the minimum setup and hold times for the two EXTHOLD settings. Setup and hold time extensions are typically necessary when SYSCLK is above 10 MHz.

Table 22.2. Minimum SDA Setup and Hold Times

EXTHOLD	Minimum SDA Setup Time	Minimum SDA Hold Time
0	T_{low} – 4 system clocks or 1 system clock + s/w delay*	3 system clocks
1	11 system clocks	12 system clocks
***Note:** Setup Time for ACK bit transmissions and the MSB of all data transfers. When using software acknowledgement, the s/w delay occurs between the time SMB0DAT or ACK is written and when SI is cleared. Note that if SI is cleared in the same write that defines the outgoing ACK value, s/w delay is zero.		

With the SMBTOE bit set, Timer 3 should be configured to overflow after 25 ms in order to detect SCL low timeouts (see Section “22.3.4. SCL Low Timeout” on page 237). The SMBus interface will force Timer 3 to reload while SCL is high, and allow Timer 3 to count when SCL is low. The Timer 3 interrupt service routine should be used to reset SMBus communication by disabling and re-enabling the SMBus.

SMBus Free Timeout detection can be enabled by setting the SMBFTE bit. When this bit is set, the bus will be considered free if SDA and SCL remain high for more than 10 SMBus clock source periods (see Figure 22.4).

SFR Definition 22.1. SMB0CF: SMBus Clock/Configuration

Bit	7	6	5	4	3	2	1	0
Name	ENSMB	INH	BUSY	EXTHOLD	SMBTOE	SMBFTE	SMBCS[1:0]	
Type	R/W	R/W	R	R/W	R/W	R/W	R/W	
Reset	0	0	0	0	0	0	0	0

SFR Page = 0x0; SFR Address = 0xC1

Bit	Name	Function
7	ENSMB	**SMBus Enable.** This bit enables the SMBus interface when set to 1. When enabled, the interface constantly monitors the SDA and SCL pins.
6	INH	**SMBus Slave Inhibit.** When this bit is set to logic 1, the SMBus does not generate an interrupt when slave events occur. This effectively removes the SMBus slave from the bus. Master Mode interrupts are not affected.
5	BUSY	**SMBus Busy Indicator.** This bit is set to logic 1 by hardware when a transfer is in progress. It is cleared to logic 0 when a STOP or free-timeout is sensed.
4	EXTHOLD	**SMBus Setup and Hold Time Extension Enable.** This bit controls the SDA setup and hold times according to Table 22.2. 0: SDA Extended Setup and Hold Times disabled. 1: SDA Extended Setup and Hold Times enabled.
3	SMBTOE	**SMBus SCL Timeout Detection Enable.** This bit enables SCL low timeout detection. If set to logic 1, the SMBus forces Timer 3 to reload while SCL is high and allows Timer 3 to count when SCL goes low. If Timer 3 is configured to Split Mode, only the High Byte of the timer is held in reload while SCL is high. Timer 3 should be programmed to generate interrupts at 25 ms, and the Timer 3 interrupt service routine should reset SMBus communication.
2	SMBFTE	**SMBus Free Timeout Detection Enable.** When this bit is set to logic 1, the bus will be considered free if SCL and SDA remain high for more than 10 SMBus clock source periods.
1:0	SMBCS[1:0]	**SMBus Clock Source Selection.** These two bits select the SMBus clock source, which is used to generate the SMBus bit rate. The selected device should be configured according to Equation 22.1. 00: Timer 0 Overflow 01: Timer 1 Overflow 10:Timer 2 High Byte Overflow 11: Timer 2 Low Byte Overflow

22.4.2. SMB0CN Control Register

SMB0CN is used to control the interface and to provide status information (see SFR Definition 22.2). The higher four bits of SMB0CN (MASTER, TXMODE, STA, and STO) form a status vector that can be used to jump to service routines. MASTER indicates whether a device is the master or slave during the current transfer. TXMODE indicates whether the device is transmitting or receiving data for the current byte.

STA and STO indicate that a START and/or STOP has been detected or generated since the last SMBus interrupt. STA and STO are also used to generate START and STOP conditions when operating as a master. Writing a 1 to STA will cause the SMBus interface to enter Master Mode and generate a START when the bus becomes free (STA is not cleared by hardware after the START is generated). Writing a 1 to STO while in Master Mode will cause the interface to generate a STOP and end the current transfer after the next ACK cycle. If STO and STA are both set (while in Master Mode), a STOP followed by a START will be generated.

The ARBLOST bit indicates that the interface has lost an arbitration. This may occur anytime the interface is transmitting (master or slave). A lost arbitration while operating as a slave indicates a bus error condition. ARBLOST is cleared by hardware each time SI is cleared.

The SI bit (SMBus Interrupt Flag) is set at the beginning and end of each transfer, after each byte frame, or when an arbitration is lost; see Table 22.3 for more details.

Important Note About the SI Bit: The SMBus interface is stalled while SI is set; thus SCL is held low, and the bus is stalled until software clears SI.

22.4.2.1.Software ACK Generation

When the EHACK bit in register SMB0ADM is cleared to 0, the firmware on the device must detect incoming slave addresses and ACK or NACK the slave address and incoming data bytes. As a receiver, writing the ACK bit defines the outgoing ACK value; as a transmitter, reading the ACK bit indicates the value received during the last ACK cycle. ACKRQ is set each time a byte is received, indicating that an outgoing ACK value is needed. When ACKRQ is set, software should write the desired outgoing value to the ACK bit before clearing SI. A NACK will be generated if software does not write the ACK bit before clearing SI. SDA will reflect the defined ACK value immediately following a write to the ACK bit; however SCL will remain low until SI is cleared. If a received slave address is not acknowledged, further slave events will be ignored until the next START is detected.

22.4.2.2.Hardware ACK Generation

When the EHACK bit in register SMB0ADM is set to 1, automatic slave address recognition and ACK generation is enabled. More detail about automatic slave address recognition can be found in Section 22.4.3. As a receiver, the value currently specified by the ACK bit will be automatically sent on the bus during the ACK cycle of an incoming data byte. As a transmitter, reading the ACK bit indicates the value received on the last ACK cycle. The ACKRQ bit is not used when hardware ACK generation is enabled. If a received slave address is NACKed by hardware, further slave events will be ignored until the next START is detected, and no interrupt will be generated.

Table 22.3 lists all sources for hardware changes to the SMB0CN bits. Refer to Table 22.5 for SMBus status decoding using the SMB0CN register.

SFR Definition 22.2. SMB0CN: SMBus Control

Bit	7	6	5	4	3	2	1	0
Name	MASTER	TXMODE	STA	STO	ACKRQ	ARBLOST	ACK	SI
Type	R	R	R/W	R/W	R	R	R/W	R/W
Reset	0	0	0	0	0	0	0	0

SFR Page = 0x0; SFR Address = 0xC0; Bit-Addressable

Bit	Name	Description	Read	Write
7	MASTER	**SMBus Master/Slave Indicator.** This read-only bit indicates when the SMBus is operating as a master.	0: SMBus operating in slave mode. 1: SMBus operating in master mode.	N/A
6	TXMODE	**SMBus Transmit Mode Indicator.** This read-only bit indicates when the SMBus is operating as a transmitter.	0: SMBus in Receiver Mode. 1: SMBus in Transmitter Mode.	N/A
5	STA	**SMBus Start Flag.**	0: No Start or repeated Start detected. 1: Start or repeated Start detected.	0: No Start generated. 1: When Configured as a Master, initiates a START or repeated START.
4	STO	**SMBus Stop Flag.**	0: No Stop condition detected. 1: Stop condition detected (if in Slave Mode) or pending (if in Master Mode).	0: No STOP condition is transmitted. 1: When configured as a Master, causes a STOP condition to be transmitted after the next ACK cycle. Cleared by Hardware.
3	ACKRQ	**SMBus Acknowledge Request.**	0: No Ack requested 1: ACK requested	N/A
2	ARBLOST	**SMBus Arbitration Lost Indicator.**	0: No arbitration error. 1: Arbitration Lost	N/A
1	ACK	**SMBus Acknowledge.**	0: NACK received. 1: ACK received.	0: Send NACK 1: Send ACK
0	SI	**SMBus Interrupt Flag.** This bit is set by hardware under the conditions listed in Table 15.3. SI must be cleared by software. While SI is set, SCL is held low and the SMBus is stalled.	**0: No interrupt pending** 1: Interrupt Pending	0: Clear interrupt, and initiate next state machine event. 1: Force interrupt.

Table 22.3. Sources for Hardware Changes to SMB0CN

Bit	Set by Hardware When:	Cleared by Hardware When:
MASTER	• A START is generated.	• A STOP is generated. • Arbitration is lost.
TXMODE	• START is generated. • SMB0DAT is written before the start of an SMBus frame.	• A START is detected. • Arbitration is lost. • SMB0DAT is not written before the start of an SMBus frame.
STA	• A START followed by an address byte is received.	• Must be cleared by software.
STO	• A STOP is detected while addressed as a slave. • Arbitration is lost due to a detected STOP.	• A pending STOP is generated.
ACKRQ	• A byte has been received and an ACK response value is needed (only when hardware ACK is not enabled).	• After each ACK cycle.
ARBLOST	• A repeated START is detected as a MASTER when STA is low (unwanted repeated START). • SCL is sensed low while attempting to generate a STOP or repeated START condition. • SDA is sensed low while transmitting a 1 (excluding ACK bits).	• Each time SI is cleared.
ACK	• The incoming ACK value is low (ACKNOWLEDGE).	• The incoming ACK value is high (NOT ACKNOWLEDGE).
SI	• A START has been generated. • Lost arbitration. • A byte has been transmitted and an ACK/NACK received. • A byte has been received. • A START or repeated START followed by a slave address + R/W has been received. • A STOP has been received.	• Must be cleared by software.

22.4.3. Hardware Slave Address Recognition

The SMBus hardware has the capability to automatically recognize incoming slave addresses and send an ACK without software intervention. Automatic slave address recognition is enabled by setting the EHACK bit in register SMB0ADM to 1. This will enable both automatic slave address recognition and automatic hardware ACK generation for received bytes (as a master or slave). More detail on automatic hardware ACK generation can be found in Section 22.4.2.2.

The registers used to define which address(es) are recognized by the hardware are the SMBus Slave Address register (SFR Definition 22.3) and the SMBus Slave Address Mask register (SFR Definition 22.4). A single address or range of addresses (including the General Call Address 0x00) can be specified using these two registers. The most-significant seven bits of the two registers are used to define which addresses will be ACKed. A 1 in bit positions of the slave address mask SLVM[6:0] enable a comparison between the received slave address and the hardware's slave address SLV[6:0] for those bits. A 0 in a bit of the slave address mask means that bit will be treated as a "don't care" for comparison purposes. In this case, either a 1 or a 0 value are acceptable on the incoming slave address. Additionally, if the GC bit in register SMB0ADR is set to 1, hardware will recognize the General Call Address (0x00). Table 22.4 shows some example parameter settings and the slave addresses that will be recognized by hardware under those conditions.

Table 22.4. Hardware Address Recognition Examples (EHACK = 1)

Hardware Slave Address SLV[6:0]	Slave Address Mask SLVM[6:0]	GC bit	Slave Addresses Recognized by Hardware
0x34	0x7F	0	0x34
0x34	0x7F	1	0x34, 0x00 (General Call)
0x34	0x7E	0	0x34, 0x35
0x34	0x7E	1	0x34, 0x35, 0x00 (General Call)
0x70	0x73	0	0x70, 0x74, 0x78, 0x7C

SFR Definition 22.3. SMB0ADR: SMBus Slave Address

Bit	7	6	5	4	3	2	1	0
Name	SLV[6:0]							GC
Type	R/W							R/W
Reset	0	0	0	0	0	0	0	0

SFR Page = 0x0; SFR Address = 0xF4

Bit	Name	Function
7:1	SLV[6:0]	**SMBus Hardware Slave Address.** Defines the SMBus Slave Address(es) for automatic hardware acknowledgement. Only address bits which have a 1 in the corresponding bit position in SLVM[6:0] are checked against the incoming address. This allows multiple addresses to be recognized.
0	GC	**General Call Address Enable.** When hardware address recognition is enabled (EHACK = 1), this bit will determine whether the General Call Address (0x00) is also recognized by hardware. 0: General Call Address is ignored. 1: General Call Address is recognized.

SFR Definition 22.4. SMB0ADM: SMBus Slave Address Mask

Bit	7	6	5	4	3	2	1	0
Name	SLVM[6:0]							EHACK
Type	R/W							R/W
Reset	1	1	1	1	1	1	1	0

SFR Page = 0x0; SFR Address = 0xF5

Bit	Name	Function
7:1	SLVM[6:0]	**SMBus Slave Address Mask.** Defines which bits of register SMB0ADR are compared with an incoming address byte, and which bits are ignored. Any bit set to 1 in SLVM[6:0] enables comparisons with the corresponding bit in SLV[6:0]. Bits set to 0 are ignored (can be either 0 or 1 in the incoming address).
0	EHACK	**Hardware Acknowledge Enable.** Enables hardware acknowledgement of slave address and received data bytes. 0: Firmware must manually acknowledge all incoming address and data bytes. 1: Automatic Slave Address Recognition and Hardware Acknowledge is Enabled.

22.4.4. Data Register

The SMBus Data register SMB0DAT holds a byte of serial data to be transmitted or one that has just been received. Software may safely read or write to the data register when the SI flag is set. Software should not attempt to access the SMB0DAT register when the SMBus is enabled and the SI flag is cleared to logic 0, as the interface may be in the process of shifting a byte of data into or out of the register.

Data in SMB0DAT is always shifted out MSB first. After a byte has been received, the first bit of received data is located at the MSB of SMB0DAT. While data is being shifted out, data on the bus is simultaneously being shifted in. SMB0DAT always contains the last data byte present on the bus. In the event of lost arbitration, the transition from master transmitter to slave receiver is made with the correct data or address in SMB0DAT.

SFR Definition 22.5. SMB0DAT: SMBus Data

Bit	7	6	5	4	3	2	1	0
Name	SMB0DAT[7:0]							
Type	R/W							
Reset	0	0	0	0	0	0	0	0

SFR Page = 0x0; SFR Address = 0xC2

Bit	Name	Function
7:0	SMB0DAT[7:0]	**SMBus Data.** The SMB0DAT register contains a byte of data to be transmitted on the SMBus serial interface or a byte that has just been received on the SMBus serial interface. The CPU can read from or write to this register whenever the SI serial interrupt flag (SMB0CN.0) is set to logic 1. The serial data in the register remains stable as long as the SI flag is set. When the SI flag is not set, the system may be in the process of shifting data in/out and the CPU should not attempt to access this register.

22.5. SMBus Transfer Modes

The SMBus interface may be configured to operate as master and/or slave. At any particular time, it will be operating in one of the following four modes: Master Transmitter, Master Receiver, Slave Transmitter, or Slave Receiver. The SMBus interface enters Master Mode any time a START is generated, and remains in Master Mode until it loses an arbitration or generates a STOP. An SMBus interrupt is generated at the end of all SMBus byte frames. Note that the position of the ACK interrupt when operating as a receiver depends on whether hardware ACK generation is enabled. As a receiver, the interrupt for an ACK occurs **before** the ACK with hardware ACK generation disabled, and **after** the ACK when hardware ACK generation is enabled. As a transmitter, interrupts occur **after** the ACK, regardless of whether hardware ACK generation is enabled or not.

22.5.1. Write Sequence (Master)

During a write sequence, an SMBus master writes data to a slave device. The master in this transfer will be a transmitter during the address byte, and a transmitter during all data bytes. The SMBus interface generates the START condition and transmits the first byte containing the address of the target slave and the data direction bit. In this case the data direction bit (R/W) will be logic 0 (WRITE). The master then transmits one or more bytes of serial data. After each byte is transmitted, an acknowledge bit is generated by the slave. The transfer is ended when the STO bit is set and a STOP is generated. Note that the interface will switch to Master Receiver Mode if SMB0DAT is not written following a Master Transmitter interrupt. Figure 22.5 shows a typical master write sequence. Two transmit data bytes are shown, though any number of bytes may be transmitted. Notice that all of the ‘data byte transferred’ interrupts occur **after** the ACK cycle in this mode, regardless of whether hardware ACK generation is enabled.

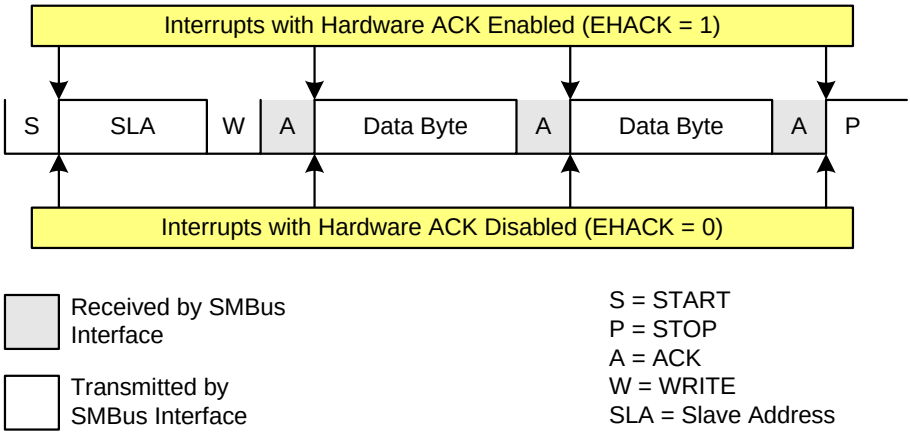

Figure 22.5. Typical Master Write Sequence

22.5.2. Read Sequence (Master)

During a read sequence, an SMBus master reads data from a slave device. The master in this transfer will be a transmitter during the address byte, and a receiver during all data bytes. The SMBus interface generates the START condition and transmits the first byte containing the address of the target slave and the data direction bit. In this case the data direction bit (R/W) will be logic 1 (READ). Serial data is then received from the slave on SDA while the SMBus outputs the serial clock. The slave transmits one or more bytes of serial data.

If hardware ACK generation is disabled, the ACKRQ is set to 1 and an interrupt is generated after each received byte. Software must write the ACK bit at that time to ACK or NACK the received byte.

With hardware ACK generation enabled, the SMBus hardware will automatically generate the ACK/NACK, and then post the interrupt. **It is important to note that the appropriate ACK or NACK value should be set up by the software prior to receiving the byte when hardware ACK generation is enabled.**

Writing a 1 to the ACK bit generates an ACK; writing a 0 generates a NACK. Software should write a 0 to the ACK bit for the last data transfer, to transmit a NACK. The interface exits Master Receiver Mode after the STO bit is set and a STOP is generated. The interface will switch to Master Transmitter Mode if SMB0DAT is written while an active Master Receiver. Figure 22.6 shows a typical master read sequence. Two received data bytes are shown, though any number of bytes may be received. Notice that the ‘data byte transferred’ interrupts occur at different places in the sequence, depending on whether hardware ACK generation is enabled. The interrupt occurs **before** the ACK with hardware ACK generation disabled, and **after** the ACK when hardware ACK generation is enabled.

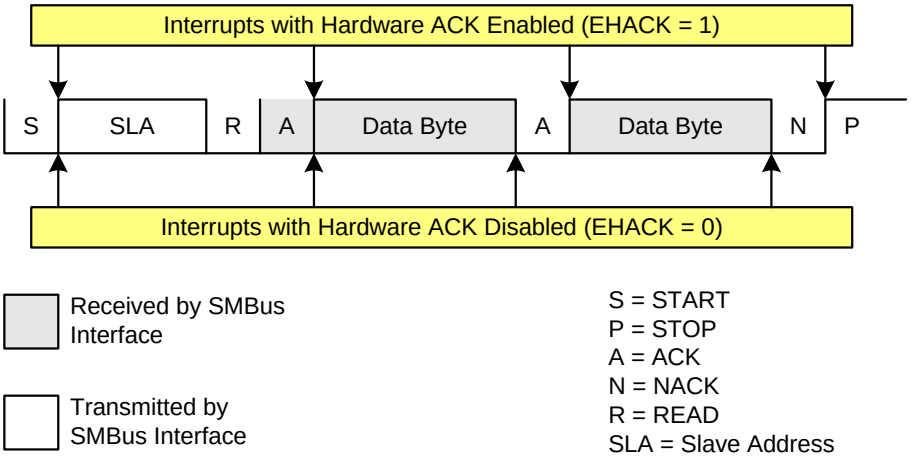

Figure 22.6. Typical Master Read Sequence

22.5.3. Write Sequence (Slave)

During a write sequence, an SMBus master writes data to a slave device. The slave in this transfer will be a receiver during the address byte, and a receiver during all data bytes. When slave events are enabled (INH = 0), the interface enters Slave Receiver Mode when a START followed by a slave address and direction bit (WRITE in this case) is received. If hardware ACK generation is disabled, upon entering Slave Receiver Mode, an interrupt is generated and the ACKRQ bit is set. The software must respond to the received slave address with an ACK, or ignore the received slave address with a NACK. If hardware ACK generation is enabled, the hardware will apply the ACK for a slave address which matches the criteria set up by SMB0ADR and SMB0ADM. The interrupt will occur after the ACK cycle.

If the received slave address is ignored (by software or hardware), slave interrupts will be inhibited until the next START is detected. If the received slave address is acknowledged, zero or more data bytes are received.

If hardware ACK generation is disabled, the ACKRQ is set to 1 and an interrupt is generated after each received byte. Software must write the ACK bit at that time to ACK or NACK the received byte.

With hardware ACK generation enabled, the SMBus hardware will automatically generate the ACK/NACK, and then post the interrupt. **It is important to note that the appropriate ACK or NACK value should be set up by the software prior to receiving the byte when hardware ACK generation is enabled.**

The interface exits Slave Receiver Mode after receiving a STOP. Note that the interface will switch to Slave Transmitter Mode if SMB0DAT is written while an active Slave Receiver. Figure 22.7 shows a typical slave write sequence. Two received data bytes are shown, though any number of bytes may be received. Notice that the ‘data byte transferred’ interrupts occur at different places in the sequence, depending on whether hardware ACK generation is enabled. The interrupt occurs **before** the ACK with hardware ACK generation disabled, and **after** the ACK when hardware ACK generation is enabled.

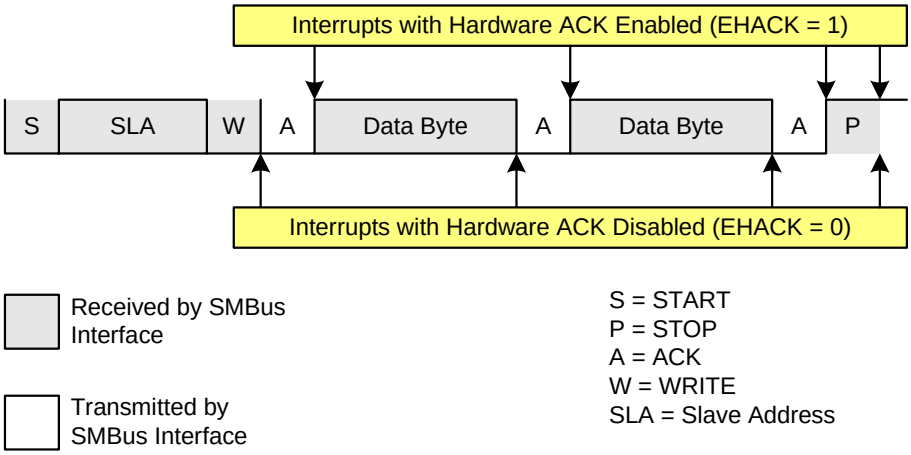

Figure 22.7. Typical Slave Write Sequence

22.5.4. Read Sequence (Slave)

During a read sequence, an SMBus master reads data from a slave device. The slave in this transfer will be a receiver during the address byte, and a transmitter during all data bytes. When slave events are enabled (INH = 0), the interface enters Slave Receiver Mode (to receive the slave address) when a START followed by a slave address and direction bit (READ in this case) is received. If hardware ACK generation is disabled, upon entering Slave Receiver Mode, an interrupt is generated and the ACKRQ bit is set. The software must respond to the received slave address with an ACK, or ignore the received slave address with a NACK. If hardware ACK generation is enabled, the hardware will apply the ACK for a slave address which matches the criteria set up by SMB0ADR and SMB0ADM. The interrupt will occur after the ACK cycle.

If the received slave address is ignored (by software or hardware), slave interrupts will be inhibited until the next START is detected. If the received slave address is acknowledged, zero or more data bytes are transmitted. If the received slave address is acknowledged, data should be written to SMB0DAT to be transmitted. The interface enters Slave Transmitter Mode, and transmits one or more bytes of data. After each byte is transmitted, the master sends an acknowledge bit; if the acknowledge bit is an ACK, SMB0DAT should be written with the next data byte. If the acknowledge bit is a NACK, SMB0DAT should not be written to before SI is cleared (Note: an error condition may be generated if SMB0DAT is written following a received NACK while in Slave Transmitter Mode). The interface exits Slave Transmitter Mode after receiving a STOP. Note that the interface will switch to Slave Receiver Mode if SMB0DAT is not written following a Slave Transmitter interrupt. Figure 22.8 shows a typical slave read sequence. Two transmitted data bytes are shown, though any number of bytes may be transmitted. Notice that all of the ‘data byte transferred’ interrupts occur **after** the ACK cycle in this mode, regardless of whether hardware ACK generation is enabled.

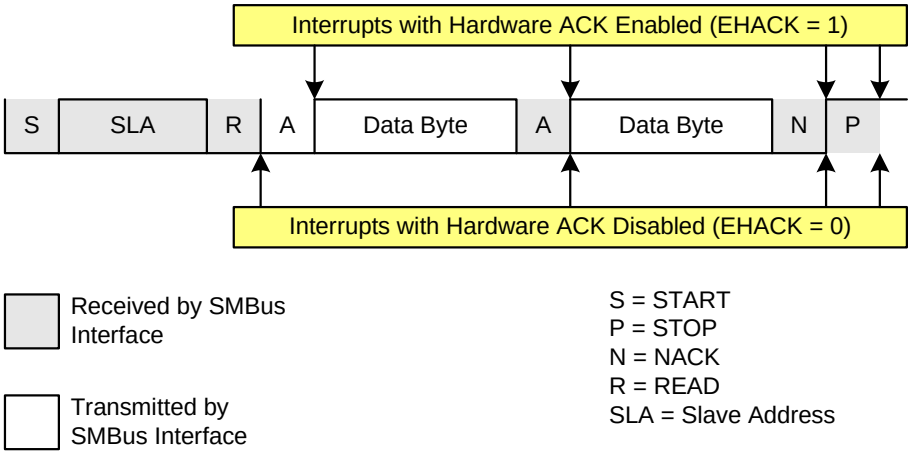

Figure 22.8. Typical Slave Read Sequence

22.6. SMBus Status Decoding

The current SMBus status can be easily decoded using the SMB0CN register. The appropriate actions to take in response to an SMBus event depend on whether hardware slave address recognition and ACK generation is enabled or disabled. Table 22.5 describes the typical actions when hardware slave address recognition and ACK generation is disabled. Table 22.6 describes the typical actions when hardware slave address recognition and ACK generation is enabled. In the tables, STATUS VECTOR refers to the four upper bits of SMB0CN: MASTER, TXMODE, STA, and STO. The shown response options are only the typical responses; application-specific procedures are allowed as long as they conform to the SMBus specification. Highlighted responses are allowed by hardware but do not conform to the SMBus specification.

Table 22.5. SMBus Status Decoding With Hardware ACK Generation Disabled (EHACK = 0)

Mode	Values Read				Current SMbus State	Typical Response Options	Values to Write			Next Status Vector Expected
	Status Vector	ACKRQ	ARBLOST	ACK			STA	STO	ACK	
Master Transmitter	1110	0	0	X	A master START was generated.	Load slave address + R/W into SMB0DAT.	0	0	X	1100
	1100	0	0	0	A master data or address byte was transmitted; NACK received.	Set STA to restart transfer.	1	0	X	1110
						Abort transfer.	0	1	X	-
		0	0	1	A master data or address byte was transmitted; ACK received.	Load next data byte into SMB0DAT.	0	0	X	1100
						End transfer with STOP.	0	1	X	-
						End transfer with STOP and start another transfer.	1	1	X	-
						Send repeated START.	1	0	X	1110
						Switch to Master Receiver Mode (clear SI without writing new data to SMB0DAT).	0	0	X	1000
Master Receiver	1000	1	0	X	A master data byte was received; ACK requested.	Acknowledge received byte; Read SMB0DAT.	0	0	1	1000
						Send NACK to indicate last byte, and send STOP.	0	1	0	-
						Send NACK to indicate last byte, and send STOP followed by START.	1	1	0	1110
						Send ACK followed by repeated START.	1	0	1	1110
						Send NACK to indicate last byte, and send repeated START.	1	0	0	1110
						Send ACK and switch to Master Transmitter Mode (write to SMB0DAT before clearing SI).	0	0	1	1100
						Send NACK and switch to Master Transmitter Mode (write to SMB0DAT before clearing SI).	0	0	0	1100

Table 22.5. SMBus Status Decoding With Hardware ACK Generation Disabled (EHACK = 0) (Continued)

Mode	Values Read				Current SMbus State	Typical Response Options	Values to Write			Next Status Vector Expected
	Status Vector	ACKRQ	ARBLOST	ACK			STA	STO	ACK	
Slave Transmitter	0100	0	0	0	A slave byte was transmitted; NACK received.	No action required (expecting STOP condition).	0	0	X	0001
		0	0	1	A slave byte was transmitted; ACK received.	Load SMB0DAT with next data byte to transmit.	0	0	X	0100
		0	1	X	A Slave byte was transmitted; error detected.	No action required (expecting Master to end transfer).	0	0	X	0001
	0101	0	X	X	An illegal STOP or bus error was detected while a Slave Transmission was in progress.	Clear STO.	0	0	X	-
Slave Receiver	0010	1	0	X	A slave address + R/W was received; ACK requested.	If Write, Acknowledge received address	0	0	1	0000
						If Read, Load SMB0DAT with data byte; ACK received address	0	0	1	0100
						NACK received address.	0	0	0	-
		1	1	X	Lost arbitration as master; slave address + R/W received; ACK requested.	If Write, Acknowledge received address	0	0	1	0000
						If Read, Load SMB0DAT with data byte; ACK received address	0	0	1	0100
						NACK received address.	0	0	0	-
						Reschedule failed transfer; NACK received address.	1	0	0	1110
	0001	0	0	X	A STOP was detected while addressed as a Slave Transmitter or Slave Receiver.	Clear STO.	0	0	X	-
		1	1	X	Lost arbitration while attempting a STOP.	No action required (transfer complete/aborted).	0	0	0	-
	0000	1	0	X	A slave byte was received; ACK requested.	Acknowledge received byte; Read SMB0DAT.	0	0	1	0000
						NACK received byte.	0	0	0	-
Bus Error Condition	0010	0	1	X	Lost arbitration while attempting a repeated START.	Abort failed transfer.	0	0	X	-
						Reschedule failed transfer.	1	0	X	1110
	0001	0	1	X	Lost arbitration due to a detected STOP.	Abort failed transfer.	0	0	X	-
						Reschedule failed transfer.	1	0	X	1110
	0000	1	1	X	Lost arbitration while transmitting a data byte as master.	Abort failed transfer.	0	0	0	-
						Reschedule failed transfer.	1	0	0	1110

Table 22.6. SMBus Status Decoding With Hardware ACK Generation Enabled (EHACK = 1)

Mode	Values Read				Current SMbus State	Typical Response Options	Values to Write			Next Status Vector Expected
	Status Vector	ACKRQ	ARBLOST	ACK			STA	STO	ACK	
Master Transmitter	1110	0	0	X	A master START was generated.	Load slave address + R/W into SMB0DAT.	0	0	X	1100
	1100	0	0	0	A master data or address byte was transmitted; NACK received.	Set STA to restart transfer.	1	0	X	1110
						Abort transfer.	0	1	X	-
		0	0	1	A master data or address byte was transmitted; ACK received.	Load next data byte into SMB0DAT.	0	0	X	1100
						End transfer with STOP.	0	1	X	-
						End transfer with STOP and start another transfer.	1	1	X	-
						Send repeated START.	1	0	X	1110
						Switch to Master Receiver Mode (clear SI without writing new data to SMB0DAT). Set ACK for initial data byte.	0	0	1	1000
Master Receiver	1000	0	0	1	A master data byte was received; ACK sent.	Set ACK for next data byte; Read SMB0DAT.	0	0	1	1000
						Set NACK to indicate next data byte as the last data byte; Read SMB0DAT.	0	0	0	1000
						Initiate repeated START.	1	0	0	1110
						Switch to Master Transmitter Mode (write to SMB0DAT before clearing SI).	0	0	X	1100
		0	0	0	A master data byte was received; NACK sent (last byte).	Read SMB0DAT; send STOP.	0	1	0	-
						Read SMB0DAT; Send STOP followed by START.	1	1	0	1110
						Initiate repeated START.	1	0	0	1110
						Switch to Master Transmitter Mode (write to SMB0DAT before clearing SI).	0	0	X	1100

Table 22.6. SMBus Status Decoding With Hardware ACK Generation Enabled (EHACK = 1) (Continued)

Mode	Values Read				Current SMbus State	Typical Response Options	Values to Write			Next Status Vector Expected
	Status Vector	ACKRQ	ARBLOST	ACK			STA	STO	ACK	
Slave Transmitter	0100	0	0	0	A slave byte was transmitted; NACK received.	No action required (expecting STOP condition).	0	0	X	0001
		0	0	1	A slave byte was transmitted; ACK received.	Load SMB0DAT with next data byte to transmit.	0	0	X	0100
		0	1	X	A Slave byte was transmitted; error detected.	No action required (expecting Master to end transfer).	0	0	X	0001
	0101	0	X	X	An illegal STOP or bus error was detected while a Slave Transmission was in progress.	Clear STO.	0	0	X	-
Slave Receiver	0010	0	0	X	A slave address + R/W was received; ACK sent.	If Write, Set ACK for first data byte.	0	0	1	0000
						If Read, Load SMB0DAT with data byte	0	0	X	0100
		0	1	X	Lost arbitration as master; slave address + R/W received; ACK sent.	If Write, Set ACK for first data byte.	0	0	1	0000
						If Read, Load SMB0DAT with data byte	0	0	X	0100
						Reschedule failed transfer	1	0	X	1110
	0001	0	0	X	A STOP was detected while addressed as a Slave Transmitter or Slave Receiver.	Clear STO.	0	0	X	-
		0	1	X	Lost arbitration while attempting a STOP.	No action required (transfer complete/aborted).	0	0	0	-
	0000	0	0	X	A slave byte was received.	Set ACK for next data byte; Read SMB0DAT.	0	0	1	0000
						Set NACK for next data byte; Read SMB0DAT.	0	0	0	0000
Bus Error Condition	0010	0	1	X	Lost arbitration while attempting a repeated START.	Abort failed transfer.	0	0	X	-
						Reschedule failed transfer.	1	0	X	1110
	0001	0	1	X	Lost arbitration due to a detected STOP.	Abort failed transfer.	0	0	X	-
						Reschedule failed transfer.	1	0	X	1110
	0000	0	1	X	Lost arbitration while transmitting a data byte as master.	Abort failed transfer.	0	0	X	-
						Reschedule failed transfer.	1	0	X	1110

23. UART0

UART0 is an asynchronous, full duplex serial port offering modes 1 and 3 of the standard 8051 UART. Enhanced baud rate support allows a wide range of clock sources to generate standard baud rates (details in Section “23.1. Enhanced Baud Rate Generation” on page 257). Received data buffering allows UART0 to start reception of a second incoming data byte before software has finished reading the previous data byte.

UART0 has two associated SFRs: Serial Control Register 0 (SCON0) and Serial Data Buffer 0 (SBUF0). The single SBUF0 location provides access to both transmit and receive registers. **Writes to SBUF0 always access the Transmit register. Reads of SBUF0 always access the buffered Receive register; it is not possible to read data from the Transmit register.**

With UART0 interrupts enabled, an interrupt is generated each time a transmit is completed (TI0 is set in SCON0), or a data byte has been received (RI0 is set in SCON0). The UART0 interrupt flags are not cleared by hardware when the CPU vectors to the interrupt service routine. They must be cleared manually by software, allowing software to determine the cause of the UART0 interrupt (transmit complete or receive complete).

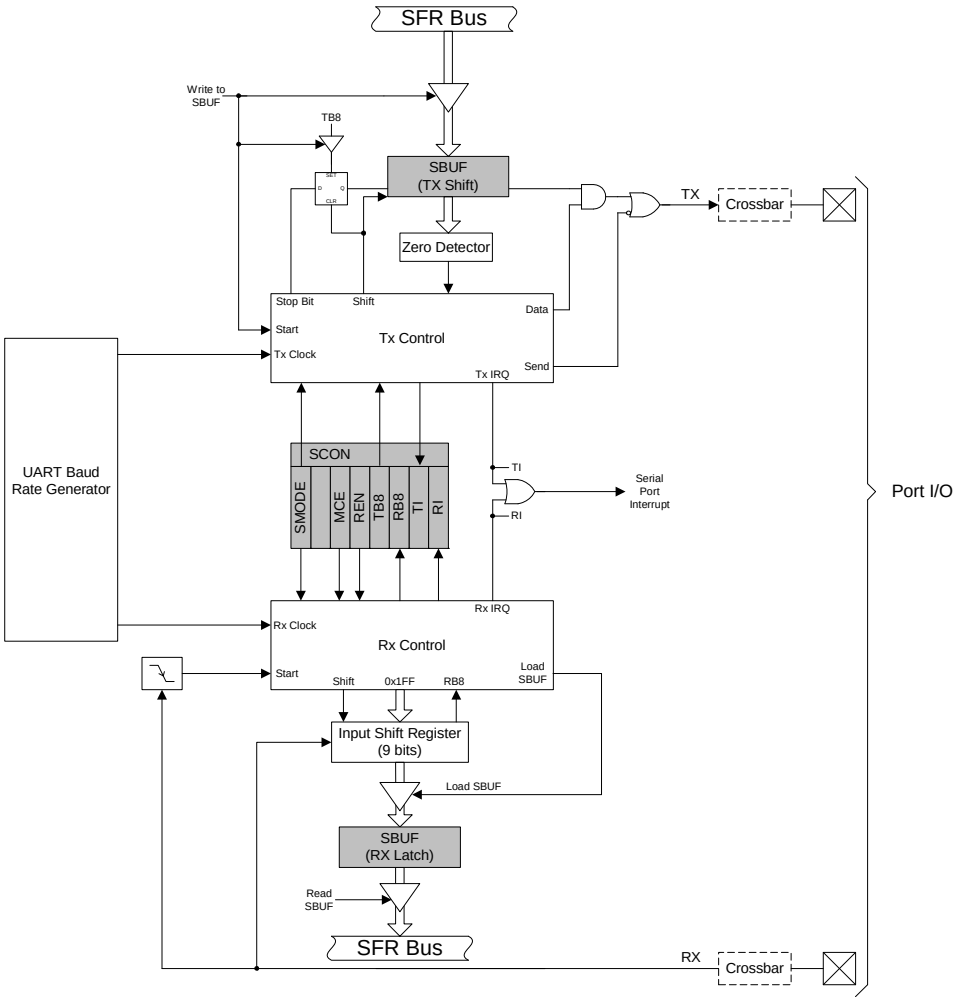

Figure 23.1. UART0 Block Diagram

23.1. Enhanced Baud Rate Generation

The UART0 baud rate is generated by Timer 1 in 8-bit auto-reload mode. The TX clock is generated by TL1; the RX clock is generated by a copy of TL1 (shown as RX Timer in Figure 23.2), which is not user-accessible. Both TX and RX Timer overflows are divided by two to generate the TX and RX baud rates. The RX Timer runs when Timer 1 is enabled, and uses the same reload value (TH1). However, an RX Timer reload is forced when a START condition is detected on the RX pin. This allows a receive to begin any time a START is detected, independent of the TX Timer state.

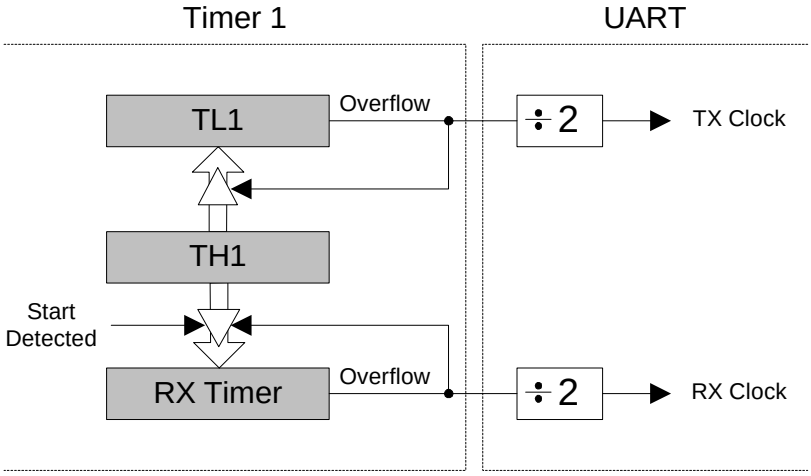

Figure 23.2. UART0 Baud Rate Logic

Timer 1 should be configured for Mode 2, 8-bit auto-reload (see Section “25.1.3. Mode 2: 8-bit Counter/Timer with Auto-Reload” on page 283). The Timer 1 reload value should be set so that overflows will occur at two times the desired UART baud rate frequency. Note that Timer 1 may be clocked by one of six sources: SYSCLK, SYSCLK / 4, SYSCLK / 12, SYSCLK / 48, the external oscillator clock / 8, or an external input T1. For any given Timer 1 clock source, the UART0 baud rate is determined by Equation 23.1-A and Equation 23.1-B.

A) $$\text{UartBaudRate} = \frac{1}{2} \times \text{T1_Overflow_Rate}$$

B) $$\text{T1_Overflow_Rate} = \frac{\text{T1}_{\text{CLK}}}{256 - \text{TH1}}$$

Equation 23.1. UART0 Baud Rate

Where $T1_{CLK}$ is the frequency of the clock supplied to Timer 1, and *T1H* is the high byte of Timer 1 (reload value). Timer 1 clock frequency is selected as described in Section “25.1. Timer 0 and Timer 1” on page 281. A quick reference for typical baud rates and system clock frequencies is given in Table 23.1 through Table 23.2. Note that the internal oscillator may still generate the system clock when the external oscillator is driving Timer 1.

23.2. Operational Modes

UART0 provides standard asynchronous, full duplex communication. The UART mode (8-bit or 9-bit) is selected by the S0MODE bit (SCON0.7). Typical UART connection options are shown below.

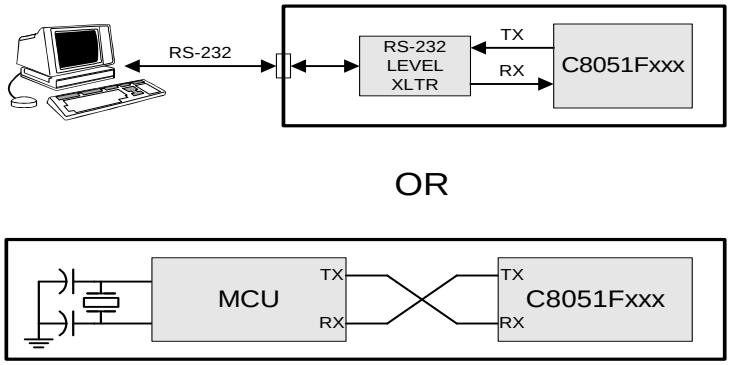

Figure 23.3. UART Interconnect Diagram

23.2.1. 8-Bit UART

8-Bit UART mode uses a total of 10 bits per data byte: one start bit, eight data bits (LSB first), and one stop bit. Data are transmitted LSB first from the TX0 pin and received at the RX0 pin. On receive, the eight data bits are stored in SBUF0 and the stop bit goes into RB80 (SCON0.2).

Data transmission begins when software writes a data byte to the SBUF0 register. The TI0 Transmit Interrupt Flag (SCON0.1) is set at the end of the transmission (the beginning of the stop-bit time). Data reception can begin any time after the REN0 Receive Enable bit (SCON0.4) is set to logic 1. After the stop bit is received, the data byte will be loaded into the SBUF0 receive register if the following conditions are met: RI0 must be logic 0, and if MCE0 is logic 1, the stop bit must be logic 1. In the event of a receive data overrun, the first received 8 bits are latched into the SBUF0 receive register and the following overrun data bits are lost.

If these conditions are met, the eight bits of data is stored in SBUF0, the stop bit is stored in RB80 and the RI0 flag is set. If these conditions are not met, SBUF0 and RB80 will not be loaded and the RI0 flag will not be set. An interrupt will occur if enabled when either TI0 or RI0 is set.

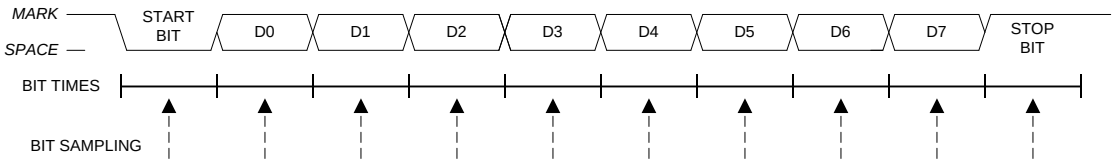

Figure 23.4. 8-Bit UART Timing Diagram

23.2.2. 9-Bit UART

9-bit UART mode uses a total of eleven bits per data byte: a start bit, 8 data bits (LSB first), a programmable ninth data bit, and a stop bit. The state of the ninth transmit data bit is determined by the value in TB80 (SCON0.3), which is assigned by user software. It can be assigned the value of the parity flag (bit P in register PSW) for error detection, or used in multiprocessor communications. On receive, the ninth data bit goes into RB80 (SCON0.2) and the stop bit is ignored.

Data transmission begins when an instruction writes a data byte to the SBUF0 register. The TI0 Transmit Interrupt Flag (SCON0.1) is set at the end of the transmission (the beginning of the stop-bit time). Data reception can begin any time after the REN0 Receive Enable bit (SCON0.4) is set to 1. After the stop bit is received, the data byte will be loaded into the SBUF0 receive register if the following conditions are met: (1) RI0 must be logic 0, and (2) if MCE0 is logic 1, the 9th bit must be logic 1 (when MCE0 is logic 0, the state of the ninth data bit is unimportant). If these conditions are met, the eight bits of data are stored in SBUF0, the ninth bit is stored in RB80, and the RI0 flag is set to 1. If the above conditions are not met, SBUF0 and RB80 will not be loaded and the RI0 flag will not be set to 1. A UART0 interrupt will occur if enabled when either TI0 or RI0 is set to 1.

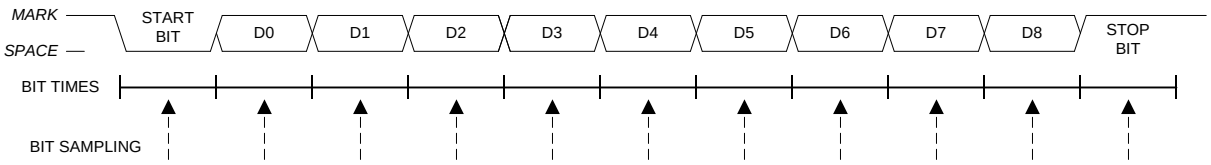

Figure 23.5. 9-Bit UART Timing Diagram

23.3. Multiprocessor Communications

9-Bit UART mode supports multiprocessor communication between a master processor and one or more slave processors by special use of the ninth data bit. When a master processor wants to transmit to one or more slaves, it first sends an address byte to select the target(s). An address byte differs from a data byte in that its ninth bit is logic 1; in a data byte, the ninth bit is always set to logic 0.

Setting the MCE0 bit (SCON0.5) of a slave processor configures its UART such that when a stop bit is received, the UART will generate an interrupt only if the ninth bit is logic 1 (RB80 = 1) signifying an address byte has been received. In the UART interrupt handler, software will compare the received address with the slave's own assigned 8-bit address. If the addresses match, the slave will clear its MCE0 bit to enable interrupts on the reception of the following data byte(s). Slaves that weren't addressed leave their MCE0 bits set and do not generate interrupts on the reception of the following data bytes, thereby ignoring the data. Once the entire message is received, the addressed slave resets its MCE0 bit to ignore all transmissions until it receives the next address byte.

Multiple addresses can be assigned to a single slave and/or a single address can be assigned to multiple slaves, thereby enabling "broadcast" transmissions to more than one slave simultaneously. The master processor can be configured to receive all transmissions or a protocol can be implemented such that the master/slave role is temporarily reversed to enable half-duplex transmission between the original master and slave(s).

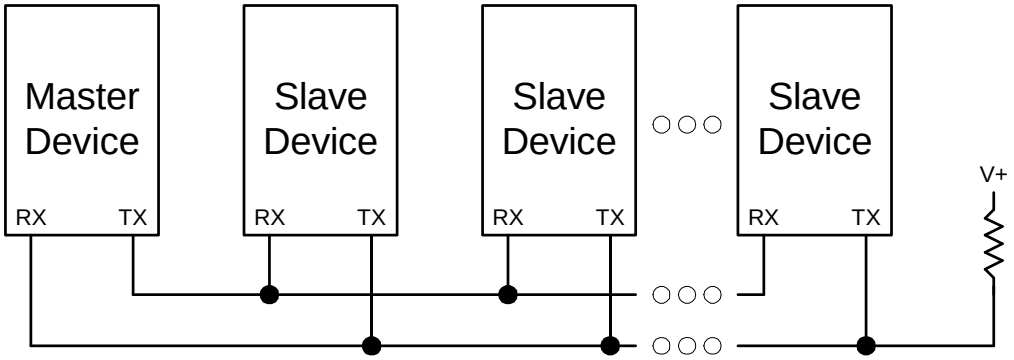

Figure 23.6. UART Multi-Processor Mode Interconnect Diagram

SFR Definition 23.1. SCON0: Serial Port 0 Control

Bit	7	6	5	4	3	2	1	0
Name	S0MODE		MCE0	REN0	TB80	RB80	TI0	RI0
Type	R/W	R	R/W	R/W	R/W	R/W	R/W	R/W
Reset	0	1	0	0	0	0	0	0

SFR Page = 0x0; SFR Address = 0x98; Bit-Addressable

Bit	Name	Function
7	S0MODE	**Serial Port 0 Operation Mode.** Selects the UART0 Operation Mode. 0: 8-bit UART with Variable Baud Rate. 1: 9-bit UART with Variable Baud Rate.
6	Unused	**Unused.** Read = 1b. Write = Don't Care.
5	MCE0	**Multiprocessor Communication Enable.** **For Mode 0 (8-bit UART): Checks for valid stop bit.** 0: Logic level of stop bit is ignored. 1: RI0 will only be activated if stop bit is logic level 1. **For Mode 1 (9-bit UART): Multiprocessor Communications Enable.** 0: Logic level of ninth bit is ignored. 1: RI0 is set and an interrupt is generated only when the ninth bit is logic 1.
4	REN0	**Receive Enable.** 0: UART0 reception disabled. 1: UART0 reception enabled.
3	TB80	**Ninth Transmission Bit.** The logic level of this bit will be sent as the ninth transmission bit in 9-bit UART Mode (Mode 1). Unused in 8-bit mode (Mode 0).
2	RB80	**Ninth Receive Bit.** RB80 is assigned the value of the STOP bit in Mode 0; it is assigned the value of the 9th data bit in Mode 1.
1	TI0	**Transmit Interrupt Flag.** Set by hardware when a byte of data has been transmitted by UART0 (after the 8th bit in 8-bit UART Mode, or at the beginning of the STOP bit in 9-bit UART Mode). When the UART0 interrupt is enabled, setting this bit causes the CPU to vector to the UART0 interrupt service routine. This bit must be cleared manually by software.
0	RI0	**Receive Interrupt Flag.** Set to 1 by hardware when a byte of data has been received by UART0 (set at the STOP bit sampling time). When the UART0 interrupt is enabled, setting this bit to 1 causes the CPU to vector to the UART0 interrupt service routine. This bit must be cleared manually by software.

SFR Definition 23.2. SBUF0: Serial (UART0) Port Data Buffer

Bit	7	6	5	4	3	2	1	0
Name	SBUF0[7:0]							
Type	R/W	R/W	R/W	R/W	R/W	R/W	R/W	R/W
Reset	0	0	0	0	0	0	0	0

SFR Page = 0x0; SFR Address = 0x99

Bit	Name	Function
7:0	SBUF0	**Serial Data Buffer Bits 7:0 (MSB–LSB).** This SFR accesses two registers; a transmit shift register and a receive latch register. When data is written to SBUF0, it goes to the transmit shift register and is held for serial transmission. Writing a byte to SBUF0 initiates the transmission. A read of SBUF0 returns the contents of the receive latch.

Table 23.1. Timer Settings for Standard Baud Rates Using The Internal 24.5 MHz Oscillator

	Frequency: 24.5 MHz						
	Target Baud Rate (bps)	Baud Rate % Error	Oscillator Divide Factor	Timer Clock Source	SCA1–SCA0 (pre-scale select)[1]	T1M[1]	Timer 1 Reload Value (hex)
SYSCLK from Internal Osc.	230400	–0.32%	106	SYSCLK	XX[2]	1	0xCB
	115200	–0.32%	212	SYSCLK	XX	1	0x96
	57600	0.15%	426	SYSCLK	XX	1	0x2B
	28800	–0.32%	848	SYSCLK/4	01	0	0x96
	14400	0.15%	1704	SYSCLK/12	00	0	0xB9
	9600	–0.32%	2544	SYSCLK/12	00	0	0x96
	2400	–0.32%	10176	SYSCLK/48	10	0	0x96
	1200	0.15%	20448	SYSCLK/48	10	0	0x2B

Notes:
1. SCA1–SCA0 and T1M bit definitions can be found in Section 25.1.
2. X = Don't care.

Table 23.2. Timer Settings for Standard Baud Rates Using an External 22.1184 MHz Oscillator

	Frequency: 22.1184 MHz						
	Target Baud Rate (bps)	Baud Rate % Error	Oscillator Divide Factor	Timer Clock Source	SCA1–SCA0 (pre-scale select)[1]	T1M[1]	Timer 1 Reload Value (hex)
SYSCLK from External Osc.	230400	0.00%	96	SYSCLK	XX[2]	1	0xD0
	115200	0.00%	192	SYSCLK	XX	1	0xA0
	57600	0.00%	384	SYSCLK	XX	1	0x40
	28800	0.00%	768	SYSCLK / 12	00	0	0xE0
	14400	0.00%	1536	SYSCLK / 12	00	0	0xC0
	9600	0.00%	2304	SYSCLK / 12	00	0	0xA0
	2400	0.00%	9216	SYSCLK / 48	10	0	0xA0
	1200	0.00%	18432	SYSCLK / 48	10	0	0x40
SYSCLK from Internal Osc.	230400	0.00%	96	EXTCLK / 8	11	0	0xFA
	115200	0.00%	192	EXTCLK / 8	11	0	0xF4
	57600	0.00%	384	EXTCLK / 8	11	0	0xE8
	28800	0.00%	768	EXTCLK / 8	11	0	0xD0
	14400	0.00%	1536	EXTCLK / 8	11	0	0xA0
	9600	0.00%	2304	EXTCLK / 8	11	0	0x70

Notes:
1. SCA1–SCA0 and T1M bit definitions can be found in Section 25.1.
2. X = Don't care.

24. Enhanced Serial Peripheral Interface (SPI0 and SPI1)

The enhanced serial peripheral interfaces (SPI0 and SPI1) provide access to two identical, flexible, full-duplex synchronous serial busses. Both SPI0 and SPI1 will be referred to collectively as SPIn. SPIn can operate as a master or slave device in both 3-wire or 4-wire modes, and supports multiple masters and slaves on a single SPI bus. The slave-select (NSS) signal can be configured as an input to select SPIn in slave mode, or to disable Master Mode operation in a multi-master environment, avoiding contention on the SPI bus when more than one master attempts simultaneous data transfers. NSS can also be configured as a chip-select output in master mode, or disabled for 3-wire operation. Additional general purpose port I/O pins can be used to select multiple slave devices in master mode.

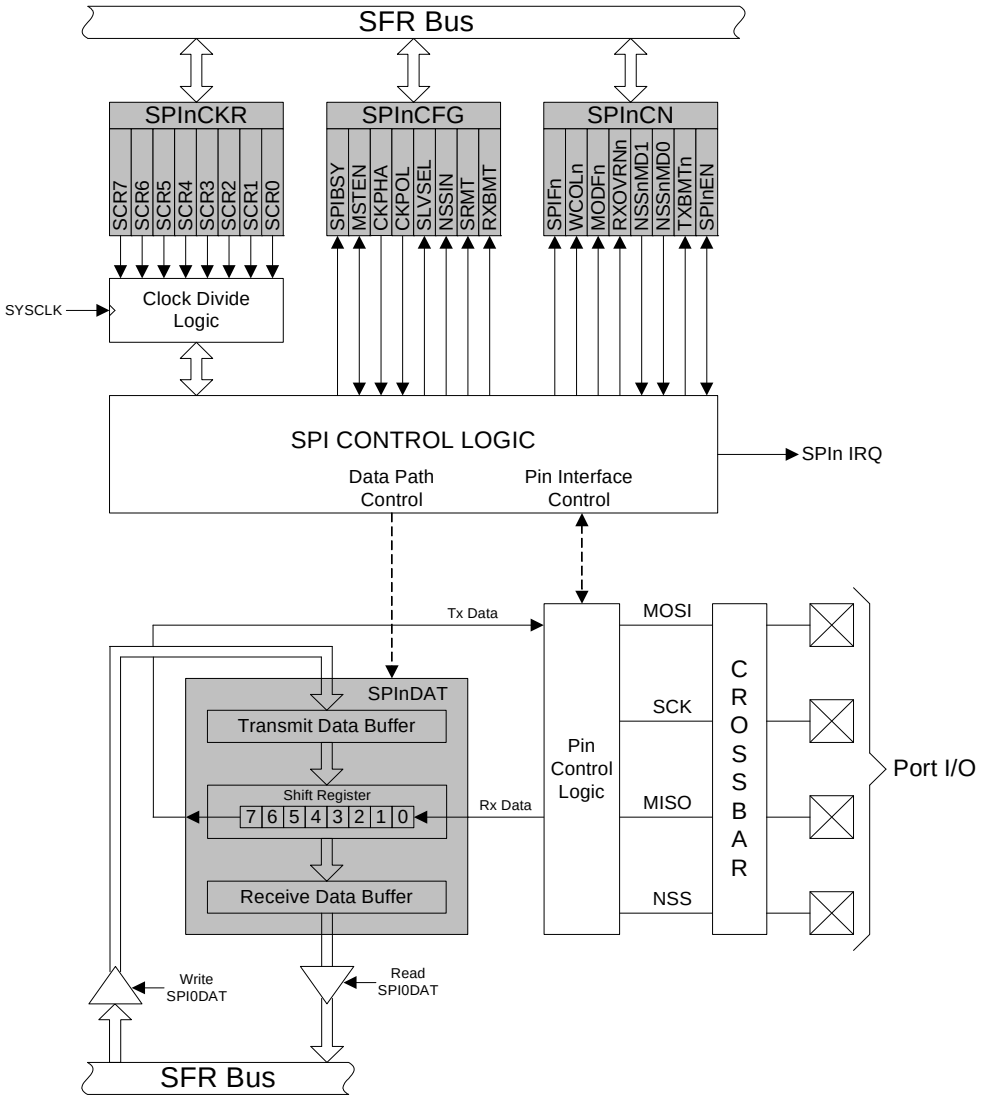

Figure 24.1. SPI Block Diagram

24.1. Signal Descriptions

The four signals used by each SPIn (MOSI, MISO, SCK, NSS) are described below.

24.1.1. Master Out, Slave In (MOSI)

The master-out, slave-in (MOSI) signal is an output from a master device and an input to slave devices. It is used to serially transfer data from the master to the slave. This signal is an output when SPIn is operating as a master anSPInd an input when SPIn is operating as a slave. Data is transferred most-significant bit first. When configured as a master, MOSI is driven by the MSB of the shift register in both 3- and 4-wire mode.

24.1.2. Master In, Slave Out (MISO)

The master-in, slave-out (MISO) signal is an output from a slave device and an input to the master device. It is used to serially transfer data from the slave to the master. This signal is an input when SPIn is operating as a master and an output when SPIn is operating as a slave. Data is transferred most-significant bit first. The MISO pin is placed in a high-impedance state when the SPI module is disabled and when the SPI operates in 4-wire mode as a slave that is not selected. When acting as a slave in 3-wire mode, MISO is always driven by the MSB of the shift register.

24.1.3. Serial Clock (SCK)

The serial clock (SCK) signal is an output from the master device and an input to slave devices. It is used to synchronize the transfer of data between the master and slave on the MOSI and MISO lines. SPIn generates this signal when operating as a master. The SCK signal is ignored by a SPI slave when the slave is not selected (NSS = 1) in 4-wire slave mode.

24.1.4. Slave Select (NSS)

The function of the slave-select (NSS) signal is dependent on the setting of the NSSnMD1 and NSSnMD0 bits in the SPInCN register. There are three possible modes that can be selected with these bits:

1. NSSMD[1:0] = 00: 3-Wire Master or 3-Wire Slave Mode: SPIn operates in 3-wire mode, and NSS is disabled. When operating as a slave device, SPIn is always selected in 3-wire mode. Since no select signal is present, SPIn must be the only slave on the bus in 3-wire mode. This is intended for point-to-point communication between a master and one slave.
2. NSSMD[1:0] = 01: 4-Wire Slave or Multi-Master Mode: SPIn operates in 4-wire mode, and NSS is enabled as an input. When operating as a slave, NSS selects the SPIn device. When operating as a master, a 1-to-0 transition of the NSS signal disables the master function of SPIn so that multiple master devices can be used on the same SPI bus.
3. NSSMD[1:0] = 1x: 4-Wire Master Mode: SPIn operates in 4-wire mode, and NSS is enabled as an output. The setting of NSSMD0 determines what logic level the NSS pin will output. This configuration should only be used when operating SPIn as a master device.

See Figure 24.2, Figure 24.3, and Figure 24.4 for typical connection diagrams of the various operational modes. **The setting of NSSMD bits affects the pinout of the device.** When in 3-wire master or 3-wire slave mode, the NSS pin will not be mapped by the crossbar. In all other modes, the NSS signal will be mapped to a pin on the device. See Section “21. Port Input/Output” on page 214 for general purpose port I/O and crossbar information.

24.2. SPI Master Mode Operation

A SPI master device initiates all data transfers on a SPI bus. SPIn is placed in master mode by setting the Master Enable flag (MSTENn, SPInCN.6). Writing a byte of data to the SPIn data register (SPInDAT) when in master mode writes to the transmit buffer. If the SPI shift register is empty, the byte in the transmit buffer is moved to the shift register, and a data transfer begins. The SPIn master immediately shifts out the data serially on the MOSI line while providing the serial clock on SCK. The SPIFn (SPInCN.7) flag is set to logic 1 at the end of the transfer. If interrupts are enabled, an interrupt request is generated when the SPIF flag is set. While the SPIn master transfers data to a slave on the MOSI line, the addressed SPI slave device simultaneously transfers the contents of its shift register to the SPI master on the MISO line in a full-duplex operation. Therefore, the SPIF flag serves as both a transmit-complete and receive-data-ready flag. The data byte received from the slave is transferred MSB-first into the master's shift register. When a byte is fully shifted into the register, it is moved to the receive buffer where it can be read by the processor by reading SPInDAT.

When configured as a master, SPIn can operate in one of three different modes: multi-master mode, 3-wire single-master mode, and 4-wire single-master mode. The default, multi-master mode is active when NSSnMD1 (SPInCN.3) = 0 and NSSnMD0 (SPInCN.2) = 1. In this mode, NSS is an input to the device, and is used to disable the master SPIn when another master is accessing the bus. When NSS is pulled low in this mode, MSTENn (SPInCN.6) and SPIENn (SPInCN.0) are set to 0 to disable the SPI master device, and a Mode Fault is generated (MODFn, SPInCN.5 = 1). Mode Fault will generate an interrupt if enabled. SPIn must be manually re-enabled in software under these circumstances. In multi-master systems, devices will typically default to being slave devices while they are not acting as the system master device. In multi-master mode, slave devices can be addressed individually (if needed) using general-purpose I/O pins. Figure 24.2 shows a connection diagram between two master devices in multiple-master mode.

3-wire single-master mode is active when NSSnMD1 (SPInCN.3) = 0 and NSSnMD0 (SPInCN.2) = 0. In this mode, NSS is not used, and is not mapped to an external port pin through the crossbar. Any slave devices that must be addressed in this mode should be selected using general-purpose I/O pins. Figure 24.3 shows a connection diagram between a master device in 3-wire master mode and a slave device.

4-wire single-master mode is active when NSSnMD1 (SPInCN.3) = 1. In this mode, NSS is configured as an output pin, and can be used as a slave-select signal for a single SPI device. In this mode, the output value of NSS is controlled (in software) with the bit NSSnMD0 (SPInCN.2). Additional slave devices can be addressed using general-purpose I/O pins. Figure 24.4 shows a connection diagram for a master device in 4-wire master mode and two slave devices.

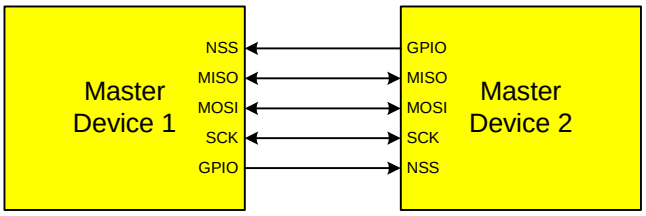

Figure 24.2. Multiple-Master Mode Connection Diagram

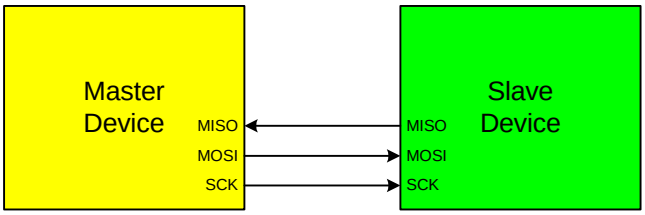

Figure 24.3. 3-Wire Single Master and 3-Wire Single Slave Mode Connection Diagram

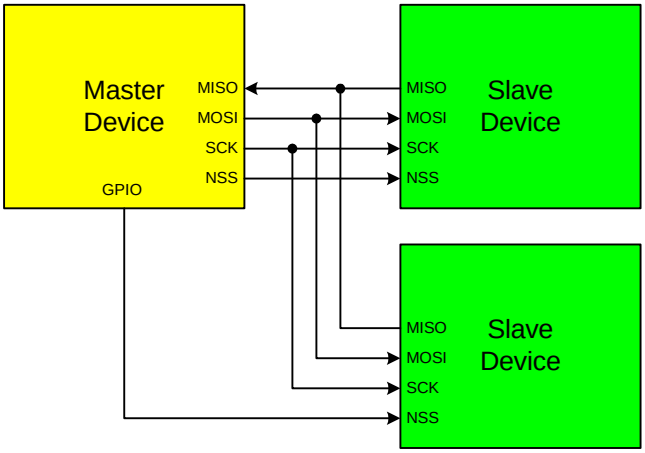

Figure 24.4. 4-Wire Single Master Mode and 4-Wire Slave Mode Connection Diagram

24.3. SPI Slave Mode Operation

When SPIn is enabled and not configured as a master, it will operate as a SPI slave. As a slave, bytes are shifted in through the MOSI pin and out through the MISO pin by a master device controlling the SCK signal. A bit counter in the SPIn logic counts SCK edges. When 8 bits have been shifted through the shift register, the SPIF flag is set to logic 1, and the byte is copied into the receive buffer. Data is read from the receive buffer by reading SPInDAT. A slave device cannot initiate transfers. Data to be transferred to the master device is pre-loaded into the shift register by writing to SPInDAT. Writes to SPInDAT are double-buffered, and are placed in the transmit buffer first. If the shift register is empty, the contents of the transmit buffer will immediately be transferred into the shift register. When the shift register already contains data, the SPI will load the shift register with the transmit buffer's contents after the last SCK edge of the next (or current) SPI transfer.

When configured as a slave, SPIn can be configured for 4-wire or 3-wire operation. The default, 4-wire slave mode, is active when NSSnMD1 (SPInCN.3) = 0 and NSSnMD0 (SPInCN.2) = 1. In 4-wire mode, the NSS signal is routed to a port pin and configured as a digital input. SPIn is enabled when NSS is logic 0, and disabled when NSS is logic 1. The bit counter is reset on a falling edge of NSS. Note that the NSS signal must be driven low at least 2 system clocks before the first active edge of SCK for each byte transfer. Figure 24.4 shows a connection diagram between two slave devices in 4-wire slave mode and a master device.

3-wire slave mode is active when NSSnMD1 (SPInCN.3) = 0 and NSSnMD0 (SPInCN.2) = 0. NSS is not used in this mode, and is not mapped to an external port pin through the crossbar. Since there is no way of uniquely addressing the device in 3-wire slave mode, SPIn must be the only slave device present on the bus. It is important to note that in 3-wire slave mode there is no external means of resetting the bit counter that determines when a full byte has been received. The bit counter can only be reset by disabling and re-enabling SPIn with the SPIEN bit. Figure 24.3 shows a connection diagram between a slave device in 3-wire slave mode and a master device.

24.4. SPI Interrupt Sources

When SPIn interrupts are enabled, the following four flags will generate an interrupt when they are set to logic 1:

All of the following bits must be cleared by software.

1. The SPI Interrupt Flag, SPIFn (SPInCN.7) is set to logic 1 at the end of each byte transfer. This flag can occur in all SPIn modes.
2. The Write Collision Flag, WCOLn (SPInCN.6) is set to logic 1 if a write to SPInDAT is attempted when the transmit buffer has not been emptied to the SPI shift register. When this occurs, the write to SPInDAT will be ignored, and the transmit buffer will not be written.This flag can occur in all SPIn modes.
3. The Mode Fault Flag MODFn (SPInCN.5) is set to logic 1 when SPIn is configured as a master, and for multi-master mode and the NSS pin is pulled low. When a Mode Fault occurs, the MSTENn and SPIENn bits in SPI0CN are set to logic 0 to disable SPIn and allow another master device to access the bus.
4. The Receive Overrun Flag RXOVRNn (SPInCN.4) is set to logic 1 when configured as a slave, and a transfer is completed and the receive buffer still holds an unread byte from a previous transfer. The new byte is not transferred to the receive buffer, allowing the previously received data byte to be read. The data byte which caused the overrun is lost.

24.5. Serial Clock Phase and Polarity

Four combinations of serial clock phase and polarity can be selected using the clock control bits in the SPI Configuration Register (SPInCFG). The CKPHA bit (SPInCFG.5) selects one of two clock phases (edge used to latch the data). The CKPOL bit (SPInCFG.4) selects between an active-high or active-low clock. Both master and slave devices must be configured to use the same clock phase and polarity. SPI0 should be disabled (by clearing the SPIENn bit, SPInCN.0) when changing the clock phase or polarity. The clock and data line relationships for master mode are shown in Figure 24.5. For slave mode, the clock and data relationships are shown in Figure 24.6 and Figure 24.7. Note that CKPHA must be set to 0 on both the master and slave SPI when communicating between two of the following devices: C8051F04x, C8051F06x, C8051F12x, C8051F31x, C8051F32x, and C8051F33x.

The SPIn Clock Rate Register (SPInCKR) as shown in SFR Definition 24.3 controls the master mode serial clock frequency. This register is ignored when operating in slave mode. When the SPI is configured as a master, the maximum data transfer rate (bits/sec) is one-half the system clock frequency or 12.5 MHz, whichever is slower. When the SPI is configured as a slave, the maximum data transfer rate (bits/sec) for full-duplex operation is 1/10 the system clock frequency, provided that the master issues SCK, NSS (in 4-wire slave mode), and the serial input data synchronously with the slave's system clock. If the master issues SCK, NSS, and the serial input data asynchronously, the maximum data transfer rate (bits/sec) must be less than 1/10 the system clock frequency. In the special case where the master only wants to transmit data to the slave and does not need to receive data from the slave (i.e. half-duplex operation), the SPI slave can receive data at a maximum data transfer rate (bits/sec) of 1/4 the system clock frequency. This is provided that the master issues SCK, NSS, and the serial input data synchronously with the slave's system clock.

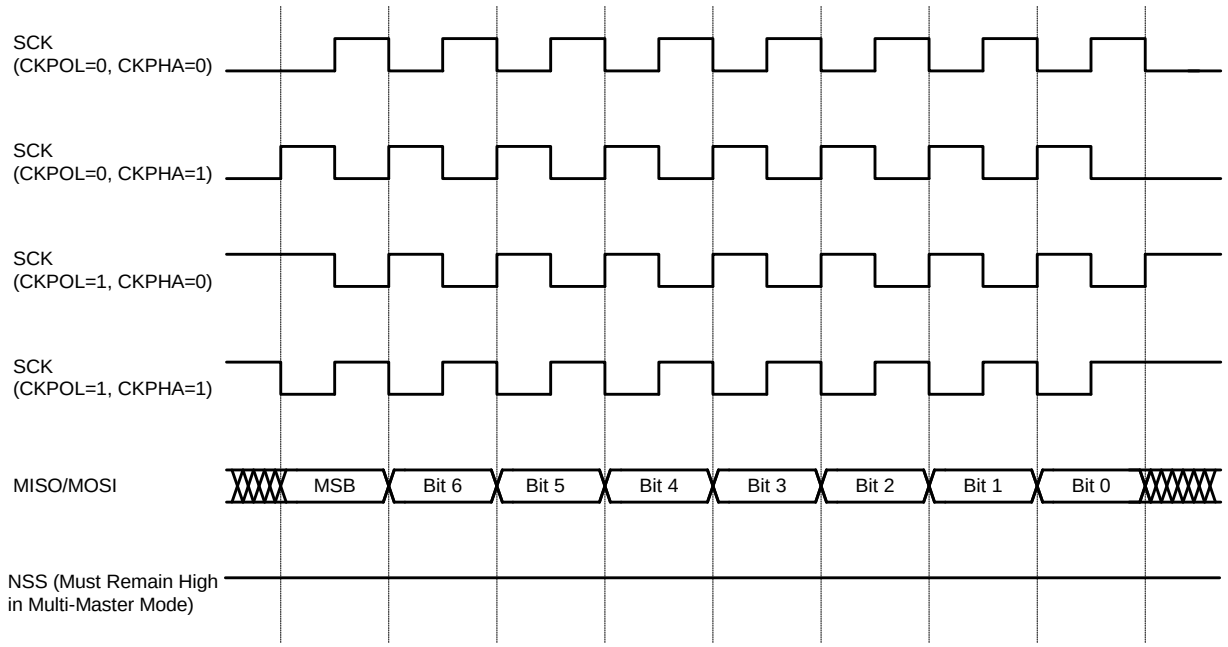

Figure 24.5. Master Mode Data/Clock Timing

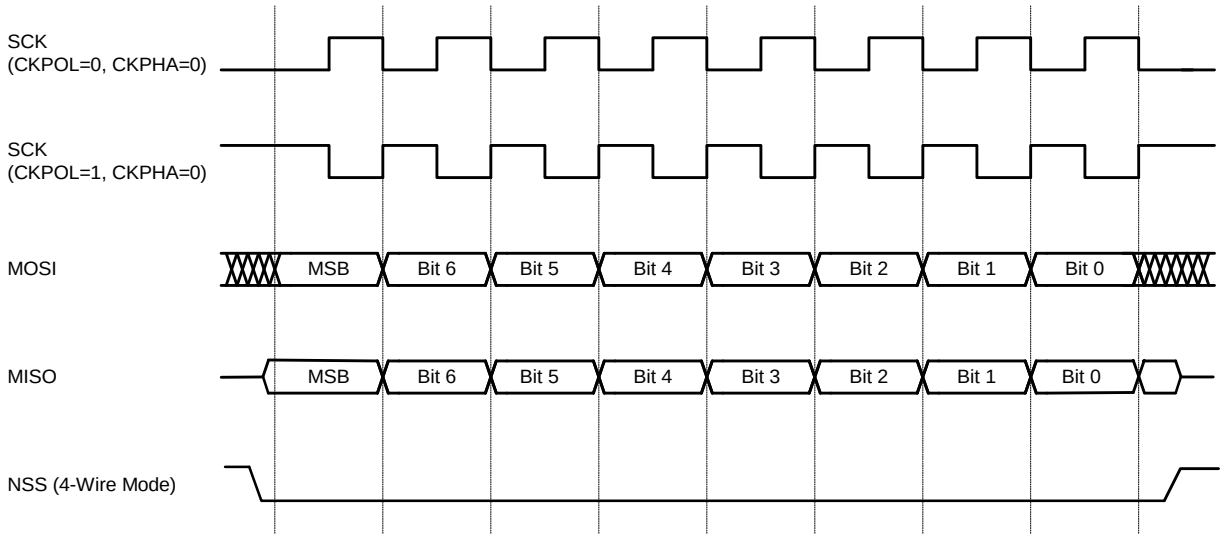

Figure 24.6. Slave Mode Data/Clock Timing (CKPHA = 0)

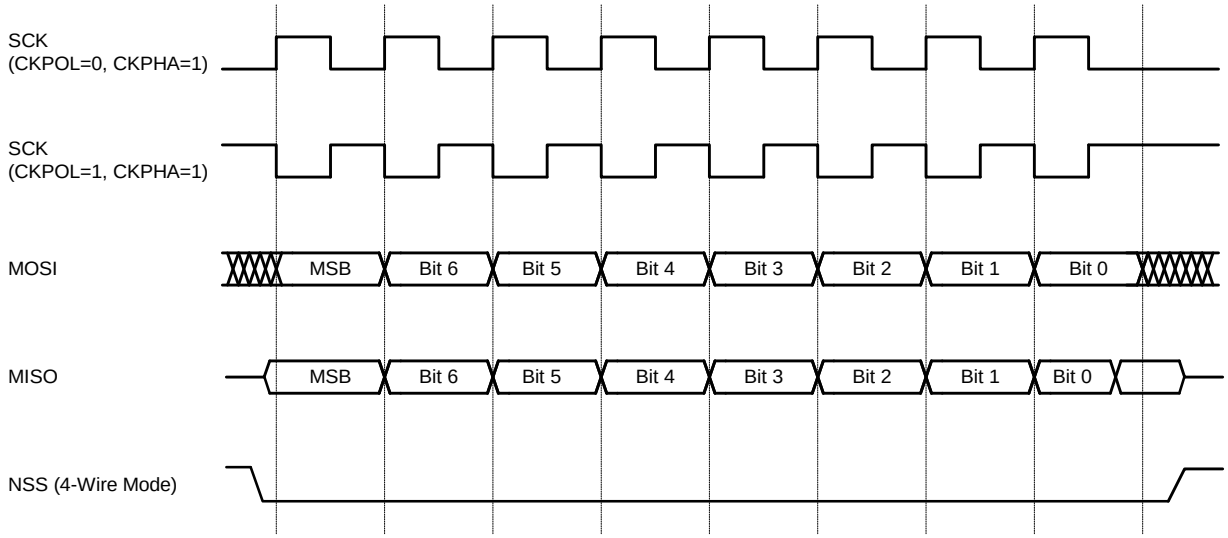

Figure 24.7. Slave Mode Data/Clock Timing (CKPHA = 1)

24.6. SPI Special Function Registers

SPI0 and SPI1 are accessed and controlled through four special function registers (8 registers total) in the system controller: SPInCN Control Register, SPInDAT Data Register, SPInCFG Configuration Register, and SPInCKR Clock Rate Register. The special function registers related to the operation of the SPI0 and SPI1 Bus are described in the following figures.

SFR Definition 24.1. SPInCFG: SPI Configuration

Bit	7	6	5	4	3	2	1	0
Name	SPIBSY	MSTEN	CKPHA	CKPOL	SLVSEL	NSSIN	SRMT	RXBMT
Type	R	R/W	R/W	R/W	R	R	R	R
Reset	0	0	0	0	0	1	1	1

SFR Addresses: SPI0CFG = 0xA1, SPI1CFG = 0x84
SFR Pages: SPI0CFG = 0x0, SPI1CFG = 0x0

Bit	Name	Function
7	SPIBSY	**SPI Busy.** This bit is set to logic 1 when a SPI transfer is in progress (master or slave mode).
6	MSTEN	**Master Mode Enable.** 0: Disable master mode. Operate in slave mode. 1: Enable master mode. Operate as a master.
5	CKPHA	**SPI Clock Phase.** 0: Data centered on first edge of SCK period.* 1: Data centered on second edge of SCK period.*
4	CKPOL	**SPI Clock Polarity.** 0: SCK line low in idle state. 1: SCK line high in idle state.
3	SLVSEL	**Slave Selected Flag.** Set to logic 1 whenever the NSS pin is low indicating SPI0 is the selected slave. It is cleared to logic 0 when NSS is high (slave not selected). This bit does not indicate the instantaneous value at the NSS pin, but rather a de-glitched version of the pin input.
2	NSSIN	**NSS Instantaneous Pin Input.** This bit mimics the instantaneous value that is present on the NSS port pin at the time that the register is read. This input is not de-glitched.
1	SRMT	**Shift Register Empty (valid in slave mode only).** Set to logic 1 when data has been transferred in/out of the shift register, and there is no data is available to read from the transmit buffer or write to the receive buffer. Set to logic 0 when a data byte is transferred to the shift register from the transmit buffer or by a transition on SCK. Note: SRMT = 1 in Master Mode.
0	RXBMT	**Receive Buffer Empty (valid in slave mode only).** Set to logic 1 when the receive buffer has been read and contains no new information. If there is new information available in the receive buffer that has not been read, this bit will return to logic 0. Note: RXBMT = 1 in Master Mode.

***Note:** In slave mode, data on MOSI is sampled in the center of each data bit. In master mode, data on MISO is sampled one SYSCLK before the end of each data bit, to provide maximum settling time for the slave device. See Table 24.1 for timing parameters.

SFR Definition 24.2. SPInCN: SPI Control

Bit	7	6	5	4	3	2	1	0
Name	SPIFn	WCOLn	MODFn	RXOVRNn	NSSnMD1	NSSnMD0	TXBMTn	SPInEN
Type	R/W	R/W	R/W	R/W	R/W	R/W	R	R/W
Reset	0	0	0	0	0	1	1	0

SFR Addresses: SPI0CN = 0xF8, Bit-Addressable; SPI1CN = 0xB0, Bit-Addressable
SFR Pages: SPI0CN = 0x0, SPI1CN = 0x0

Bit	Name	Function
7	SPIFn	**SPIn Interrupt Flag.** This bit is set to logic 1 by hardware at the end of a data transfer. If interrupts are enabled, setting this bit causes the CPU to vector to the SPIn interrupt service routine. This bit is not automatically cleared by hardware. It must be cleared by software.
6	WCOLn	**Write Collision Flag.** This bit is set to logic 1 by hardware (and generates a SPI0 interrupt) to indicate a write to the SPI0 data register was attempted while a data transfer was in progress. It must be cleared by software.
5	MODFn	**Mode Fault Flag.** This bit is set to logic 1 by hardware (and generates a SPI0 interrupt) when a master mode collision is detected (NSS is low, MSTEN = 1, and NSSMD[1:0] = 01). This bit is not automatically cleared by hardware. It must be cleared by software.
4	RXOVRNn	**Receive Overrun Flag (valid in slave mode only).** This bit is set to logic 1 by hardware (and generates a SPIn interrupt) when the receive buffer still holds unread data from a previous transfer and the last bit of the current transfer is shifted into the SPI shift register. This bit is not automatically cleared by hardware. It must be cleared by software.
3:2	NSSnMD[1:0]	**Slave Select Mode.** Selects between the following NSS operation modes: (See Section 24.2 and Section 24.3). 00: 3-Wire Slave or 3-Wire Master Mode. NSS signal is not routed to a port pin. 01: 4-Wire Slave or Multi-Master Mode (Default). NSS is an input to the device. 1x: 4-Wire Single-Master Mode. NSS signal is mapped as an output from the device and will assume the value of NSSMD0.
1	TXBMTn	**Transmit Buffer Empty.** This bit will be set to logic 0 when new data has been written to the transmit buffer. When data in the transmit buffer is transferred to the SPI shift register, this bit will be set to logic 1, indicating that it is safe to write a new byte to the transmit buffer.
0	SPInEN	**SPIn Enable.** 0: SPIn disabled. 1: SPIn enabled.

SFR Definition 24.3. SPInCKR: SPI Clock Rate

Bit	7	6	5	4	3	2	1	0
Name	SCRn[7:0]							
Type	R/W							
Reset	0	0	0	0	0	0	0	0

SFR Addresses: SPI0CKR = 0xA2, SPI1CKR = 0x85
SFR Pages: SPI0CKR = 0x0, SPI1CKR = 0x0

Bit	Name	Function
7:0	SCRn	**SPI Clock Rate.** These bits determine the frequency of the SCK output when the SPI module is configured for master mode operation. The SCK clock frequency is a divided version of the system clock, and is given in the following equation, where *SYSCLK* is the system clock frequency and *SPInCKR* is the 8-bit value held in the SPInCKR register. $f_{SCK} = \frac{SYSCLK}{2 \times (SPInCKR[7:0] + 1)}$ for 0 <= SPI0CKR <= 255 Example: If SYSCLK = 2 MHz and SPInCKR = 0x04, $f_{SCK} = \frac{2000000}{2 \times (4 + 1)}$ $f_{SCK} = 200kHz$

SFR Definition 24.4. SPInDAT: SPI Data

Bit	7	6	5	4	3	2	1	0
Name	SPInDAT[7:0]							
Type	R/W							
Reset	0	0	0	0	0	0	0	0

SFR Addresses: SPI0DAT = 0xA3, SPI1DAT = 0x86
SFR Pages: SPI0DAT = 0x0, SPI1DAT = 0x0

Bit	Name	Function
7:0	SPInDAT	**SPIn Transmit and Receive Data.** The SPInDAT register is used to transmit and receive SPIn data. Writing data to SPInDAT places the data into the transmit buffer and initiates a transfer when in Master Mode. A read of SPInDAT returns the contents of the receive buffer.

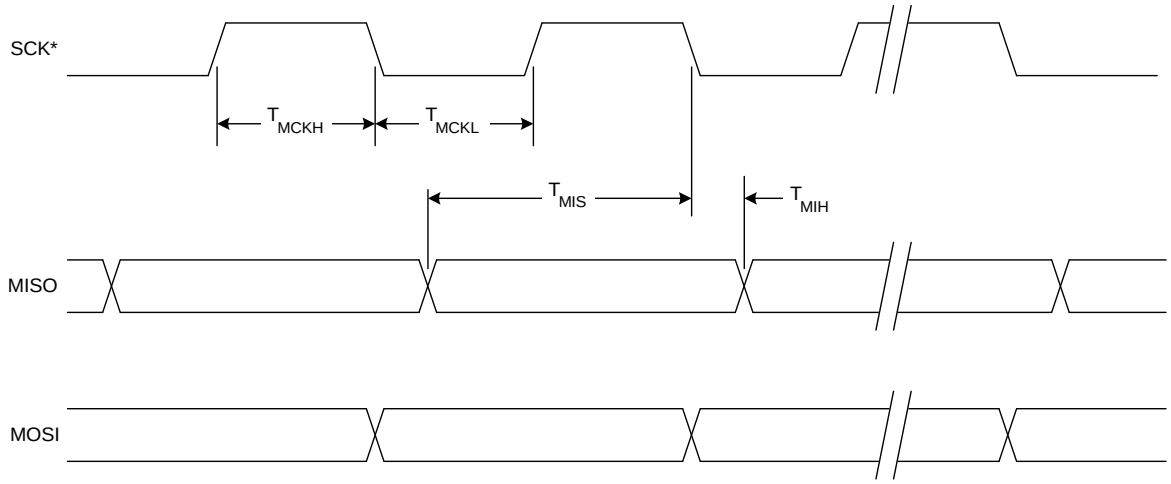

* SCK is shown for CKPOL = 0. SCK is the opposite polarity for CKPOL = 1.

Figure 24.8. SPI Master Timing (CKPHA = 0)

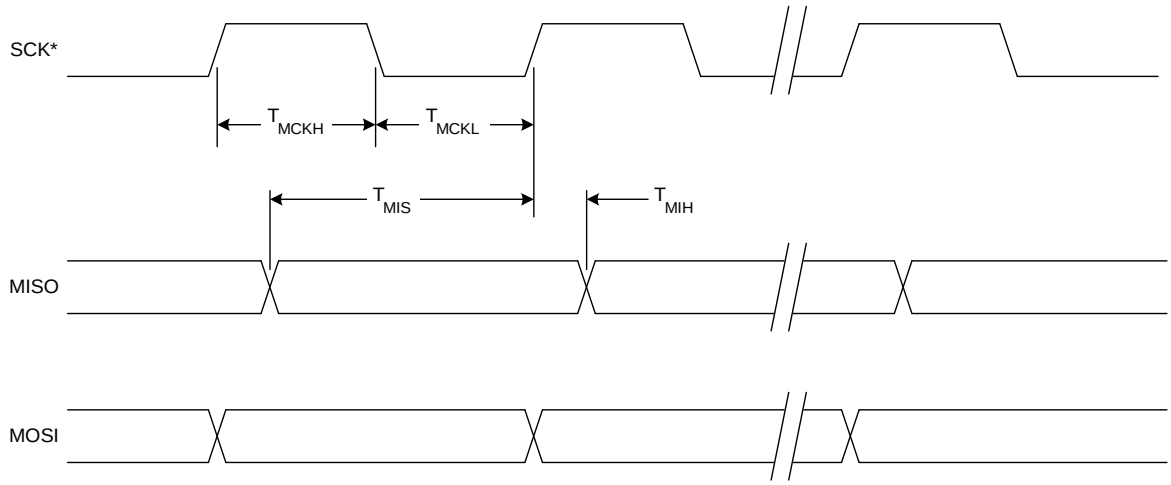

* SCK is shown for CKPOL = 0. SCK is the opposite polarity for CKPOL = 1.

Figure 24.9. SPI Master Timing (CKPHA = 1)

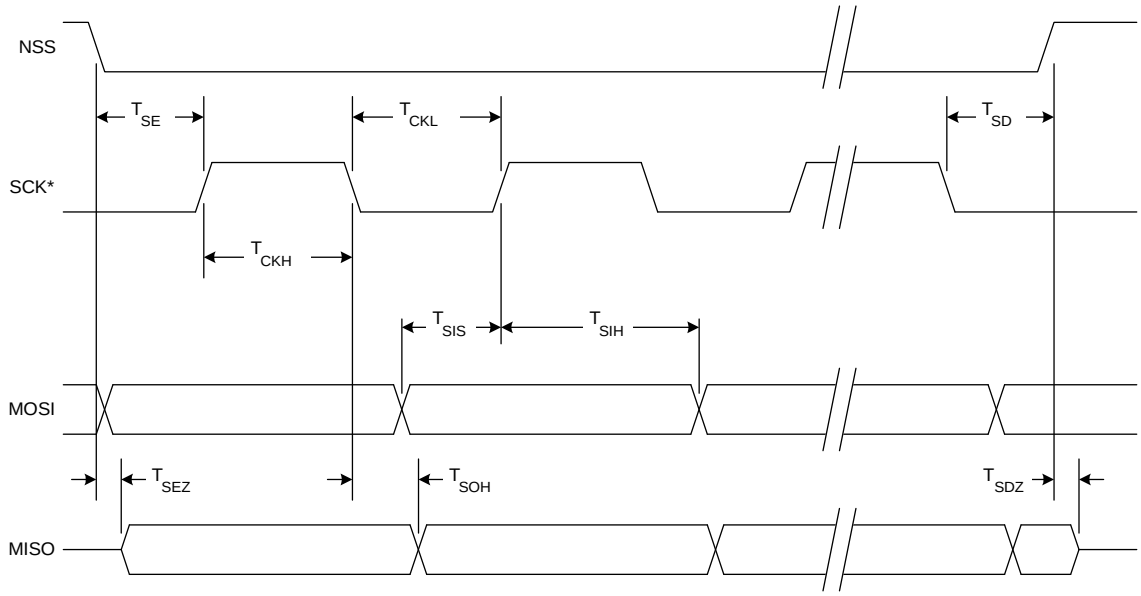

* SCK is shown for CKPOL = 0. SCK is the opposite polarity for CKPOL = 1.

Figure 24.10. SPI Slave Timing (CKPHA = 0)

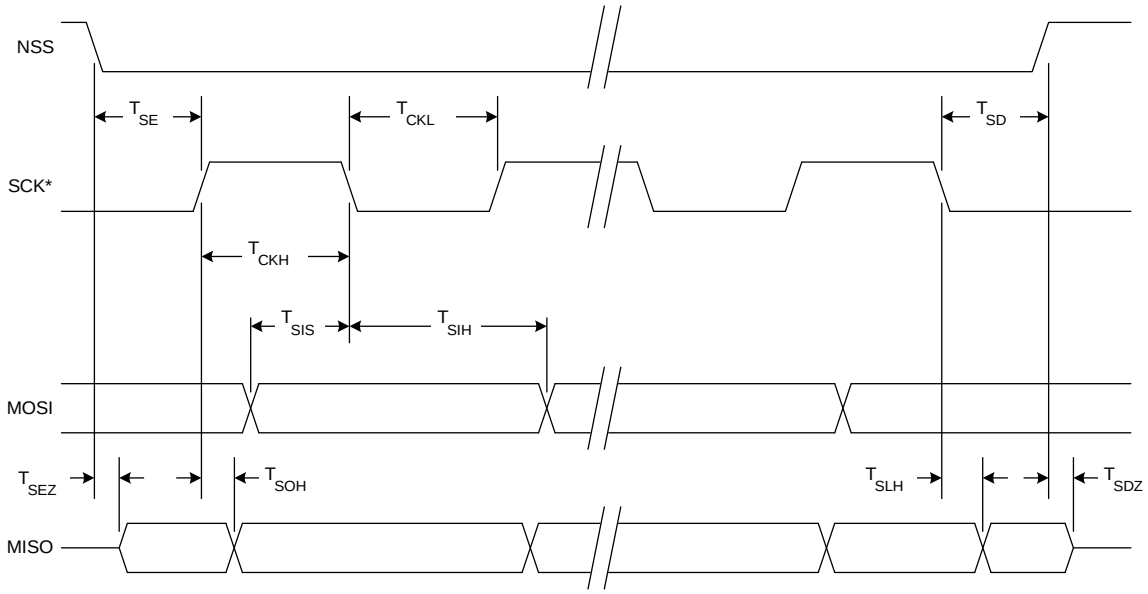

* SCK is shown for CKPOL = 0. SCK is the opposite polarity for CKPOL = 1.

Figure 24.11. SPI Slave Timing (CKPHA = 1)

Table 24.1. SPI Slave Timing Parameters

Parameter	Description	Min	Max	Units
Master Mode Timing* (See Figure 24.8 and Figure 24.9)				
T_{MCKH}	SCK High Time	1 x T_{SYSCLK}	—	ns
T_{MCKL}	SCK Low Time	1 x T_{SYSCLK}	—	ns
T_{MIS}	MISO Valid to SCK Shift Edge	1 x T_{SYSCLK} + 20	—	ns
T_{MIH}	SCK Shift Edge to MISO Change	0	—	ns
Slave Mode Timing* (See Figure 24.10 and Figure 24.11)				
T_{SE}	NSS Falling to First SCK Edge	2 x T_{SYSCLK}	—	ns
T_{SD}	Last SCK Edge to NSS Rising	2 x T_{SYSCLK}	—	ns
T_{SEZ}	NSS Falling to MISO Valid	—	4 x T_{SYSCLK}	ns
T_{SDZ}	NSS Rising to MISO High-Z	—	4 x T_{SYSCLK}	ns
T_{CKH}	SCK High Time	5 x T_{SYSCLK}	—	ns
T_{CKL}	SCK Low Time	5 x T_{SYSCLK}	—	ns
T_{SIS}	MOSI Valid to SCK Sample Edge	2 x T_{SYSCLK}	—	ns
T_{SIH}	SCK Sample Edge to MOSI Change	2 x T_{SYSCLK}	—	ns
T_{SOH}	SCK Shift Edge to MISO Change	—	4 x T_{SYSCLK}	ns
T_{SLH}	Last SCK Edge to MISO Change (CKPHA = 1 ONLY)	6 x T_{SYSCLK}	8 x T_{SYSCLK}	ns
***Note:** T_{SYSCLK} is equal to one period of the device system clock (SYSCLK).				

25. Timers

Each MCU includes four counter/timers: two are 16-bit counter/timers compatible with those found in the standard 8051, and two are 16-bit auto-reload timer for use with the ADC, SMBus, or for general purpose use. These timers can be used to measure time intervals, count external events and generate periodic interrupt requests. Timer 0 and Timer 1 are nearly identical and have four primary modes of operation. Timer 2 and Timer 3 offer 16-bit and split 8-bit timer functionality with auto-reload. Additionally, Timer 2 and Timer 3 have a Capture Mode that can be used to measure the SmaRTClock or a Comparator period with respect to another oscillator. This is particularly useful when using Capacitive Touch Switches. See Application Note AN338 for details on Capacitive Touch Switch sensing.

Timer 0 and Timer 1 Modes:	Timer 2 Modes:	Timer 3 Modes:
13-bit counter/timer	16-bit timer with auto-reload	16-bit timer with auto-reload
16-bit counter/timer		
8-bit counter/timer with auto-reload	Two 8-bit timers with auto-reload	Two 8-bit timers with auto-reload
Two 8-bit counter/timers (Timer 0 only)		

Timers 0 and 1 may be clocked by one of five sources, determined by the Timer Mode Select bits (T1M–T0M) and the Clock Scale bits (SCA1–SCA0). The Clock Scale bits define a pre-scaled clock from which Timer 0 and/or Timer 1 may be clocked (See SFR Definition 25.1 for pre-scaled clock selection).

Timer 0/1 may then be configured to use this pre-scaled clock signal or the system clock. Timer 2 and Timer 3 may be clocked by the system clock, the system clock divided by 12. Timer 2 may additionally be clocked by the SmaRTClock divided by 8 or the Comparator0 output. Timer 3 may additionally be clocked by the external oscillator clock source divided by 8 or the Comparator1 output.

Timer 0 and Timer 1 may also be operated as counters. When functioning as a counter, a counter/timer register is incremented on each high-to-low transition at the selected input pin (T0 or T1). Events with a frequency of up to one-fourth the system clock frequency can be counted. The input signal need not be periodic, but it should be held at a given level for at least two full system clock cycles to ensure the level is properly sampled.

SFR Definition 25.1. CKCON: Clock Control

Bit	7	6	5	4	3	2	1	0
Name	T3MH	T3ML	T2MH	T2ML	T1M	T0M	SCA[1:0]	
Type	R/W	R/W	R/W	R/W	R/W	R/W	R/W	
Reset	0	0	0	0	0	0	0	0

SFR Page = 0x0; SFR Address = 0x8E

Bit	Name	Function
7	T3MH	**Timer 3 High Byte Clock Select.** Selects the clock supplied to the Timer 3 high byte (split 8-bit timer mode only). 0: Timer 3 high byte uses the clock defined by the T3XCLK bit in TMR3CN. 1: Timer 3 high byte uses the system clock.
6	T3ML	**Timer 3 Low Byte Clock Select.** Selects the clock supplied to Timer 3. Selects the clock supplied to the lower 8-bit timer in split 8-bit timer mode. 0: Timer 3 low byte uses the clock defined by the T3XCLK bit in TMR3CN. 1: Timer 3 low byte uses the system clock.
5	T2MH	**Timer 2 High Byte Clock Select.** Selects the clock supplied to the Timer 2 high byte (split 8-bit timer mode only). 0: Timer 2 high byte uses the clock defined by the T2XCLK bit in TMR2CN. 1: Timer 2 high byte uses the system clock.
4	T2ML	**Timer 2 Low Byte Clock Select.** Selects the clock supplied to Timer 2. If Timer 2 is configured in split 8-bit timer mode, this bit selects the clock supplied to the lower 8-bit timer. 0: Timer 2 low byte uses the clock defined by the T2XCLK bit in TMR2CN. 1: Timer 2 low byte uses the system clock.
3	T1M	**Timer 1 Clock Select.** Selects the clock source supplied to Timer 1. Ignored when C/T1 is set to 1. 0: Timer 1 uses the clock defined by the prescale bits SCA[1:0]. 1: Timer 1 uses the system clock.
2	T0M	**Timer 0 Clock Select.** Selects the clock source supplied to Timer 0. Ignored when C/T0 is set to 1. 0: Counter/Timer 0 uses the clock defined by the prescale bits SCA[1:0]. 1: Counter/Timer 0 uses the system clock.
1:0	SCA[1:0]	**Timer 0/1 Prescale Bits.** These bits control the Timer 0/1 Clock Prescaler: 00: System clock divided by 12 01: System clock divided by 4 10: System clock divided by 48 11: External clock divided by 8 (synchronized with the system clock)

25.1. Timer 0 and Timer 1

Each timer is implemented as a 16-bit register accessed as two separate bytes: a low byte (TL0 or TL1) and a high byte (TH0 or TH1). The Counter/Timer Control register (TCON) is used to enable Timer 0 and Timer 1 as well as indicate status. Timer 0 interrupts can be enabled by setting the ET0 bit in the IE register (Section “12.5. Interrupt Register Descriptions” on page 129); Timer 1 interrupts can be enabled by setting the ET1 bit in the IE register (Section “12.5. Interrupt Register Descriptions” on page 129). Both counter/timers operate in one of four primary modes selected by setting the Mode Select bits T1M1–T0M0 in the Counter/Timer Mode register (TMOD). Each timer can be configured independently. Each operating mode is described below.

25.1.1. Mode 0: 13-bit Counter/Timer

Timer 0 and Timer 1 operate as 13-bit counter/timers in Mode 0. The following describes the configuration and operation of Timer 0. However, both timers operate identically, and Timer 1 is configured in the same manner as described for Timer 0.

The TH0 register holds the eight MSBs of the 13-bit counter/timer. TL0 holds the five LSBs in bit positions TL0.4–TL0.0. The three upper bits of TL0 (TL0.7–TL0.5) are indeterminate and should be masked out or ignored when reading. As the 13-bit timer register increments and overflows from 0x1FFF (all ones) to 0x0000, the timer overflow flag TF0 (TCON.5) is set and an interrupt will occur if Timer 0 interrupts are enabled.

The C/T0 bit (TMOD.2) selects the counter/timer's clock source. When C/T0 is set to logic 1, high-to-low transitions at the selected Timer 0 input pin (T0) increment the timer register (Refer to Section “21.3. Priority Crossbar Decoder” on page 218 for information on selecting and configuring external I/O pins). Clearing C/T selects the clock defined by the T0M bit (CKCON.3). When T0M is set, Timer 0 is clocked by the system clock. When T0M is cleared, Timer 0 is clocked by the source selected by the Clock Scale bits in CKCON (see SFR Definition 25.1).

Setting the TR0 bit (TCON.4) enables the timer when either GATE0 (TMOD.3) is logic 0 or the input signal $\overline{\text{INT0}}$ is active as defined by bit IN0PL in register IT01CF (see SFR Definition 12.7). Setting GATE0 to 1 allows the timer to be controlled by the external input signal $\overline{\text{INT0}}$ (see Section “12.5. Interrupt Register Descriptions” on page 129), facilitating pulse width measurements

Table 25.1. Timer 0 Running Modes

TR0	GATE0	$\overline{\text{INT0}}$	Counter/Timer
0	X	X	Disabled
1	0	X	Enabled
1	1	0	Disabled
1	1	1	Enabled
Note: X = Don't Care			

Setting TR0 does not force the timer to reset. The timer registers should be loaded with the desired initial value before the timer is enabled.

TL1 and TH1 form the 13-bit register for Timer 1 in the same manner as described above for TL0 and TH0. Timer 1 is configured and controlled using the relevant TCON and TMOD bits just as with Timer 0. The input signal $\overline{\text{INT1}}$ is used with Timer 1; the $\overline{\text{INT1}}$ polarity is defined by bit IN1PL in register IT01CF (see SFR Definition 12.7).

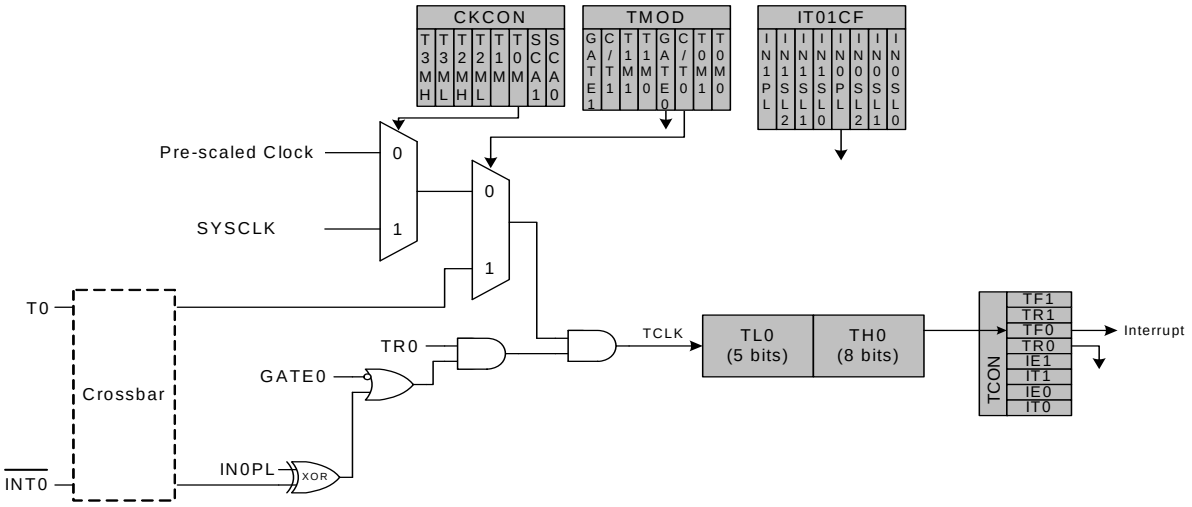

Figure 25.1. T0 Mode 0 Block Diagram

25.1.2. Mode 1: 16-bit Counter/Timer

Mode 1 operation is the same as Mode 0, except that the counter/timer registers use all 16 bits. The counter/timers are enabled and configured in Mode 1 in the same manner as for Mode 0.

25.1.3. Mode 2: 8-bit Counter/Timer with Auto-Reload

Mode 2 configures Timer 0 and Timer 1 to operate as 8-bit counter/timers with automatic reload of the start value. TL0 holds the count and TH0 holds the reload value. When the counter in TL0 overflows from all ones to 0x00, the timer overflow flag TF0 (TCON.5) is set and the counter in TL0 is reloaded from TH0. If Timer 0 interrupts are enabled, an interrupt will occur when the TF0 flag is set. The reload value in TH0 is not changed. TL0 must be initialized to the desired value before enabling the timer for the first count to be correct. When in Mode 2, Timer 1 operates identically to Timer 0.

Both counter/timers are enabled and configured in Mode 2 in the same manner as Mode 0. Setting the TR0 bit (TCON.4) enables the timer when either GATE0 (TMOD.3) is logic 0 or when the input signal $\overline{\text{INT0}}$ is active as defined by bit IN0PL in register IT01CF (see Section “12.6. External Interrupts INT0 and INT1” on page 136 for details on the external input signals $\overline{\text{INT0}}$ and $\overline{\text{INT1}}$).

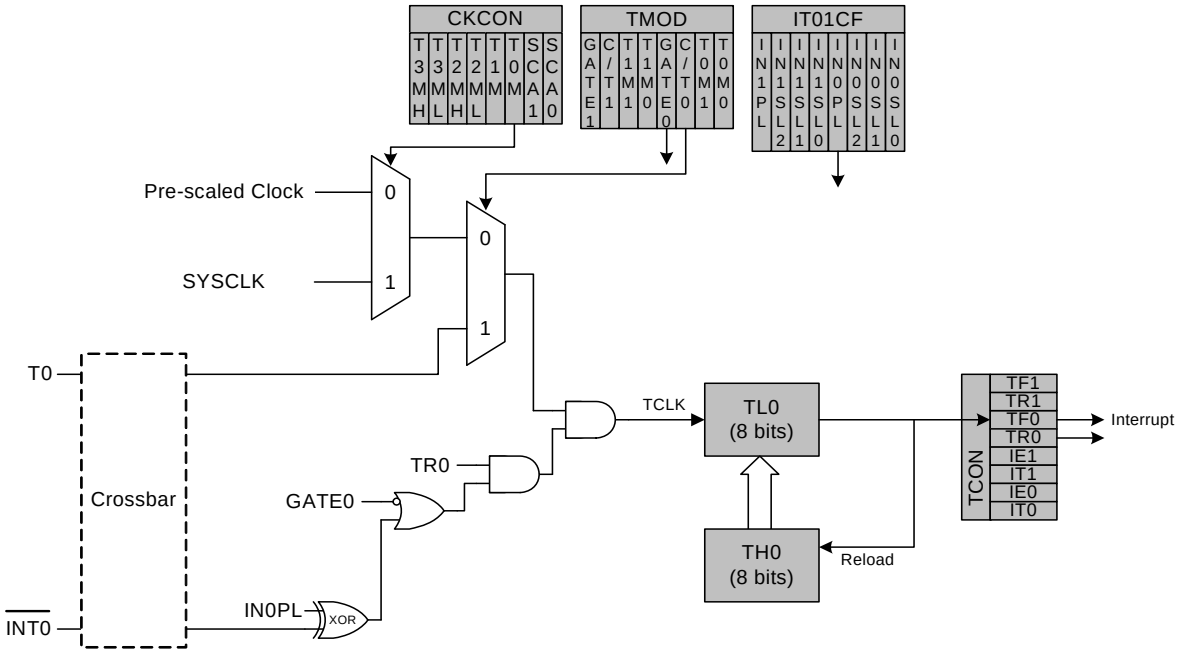

Figure 25.2. T0 Mode 2 Block Diagram

25.1.4. Mode 3: Two 8-bit Counter/Timers (Timer 0 Only)

In Mode 3, Timer 0 is configured as two separate 8-bit counter/timers held in TL0 and TH0. The counter/timer in TL0 is controlled using the Timer 0 control/status bits in TCON and TMOD: TR0, C/T0, GATE0 and TF0. TL0 can use either the system clock or an external input signal as its timebase. The TH0 register is restricted to a timer function sourced by the system clock or prescaled clock. TH0 is enabled using the Timer 1 run control bit TR1. TH0 sets the Timer 1 overflow flag TF1 on overflow and thus controls the Timer 1 interrupt.

Timer 1 is inactive in Mode 3. When Timer 0 is operating in Mode 3, Timer 1 can be operated in Modes 0, 1 or 2, but cannot be clocked by external signals nor set the TF1 flag and generate an interrupt. However, the Timer 1 overflow can be used to generate baud rates for the SMBus and/or UART, and/or initiate ADC conversions. While Timer 0 is operating in Mode 3, Timer 1 run control is handled through its mode settings. To run Timer 1 while Timer 0 is in Mode 3, set the Timer 1 Mode as 0, 1, or 2. To disable Timer 1, configure it for Mode 3.

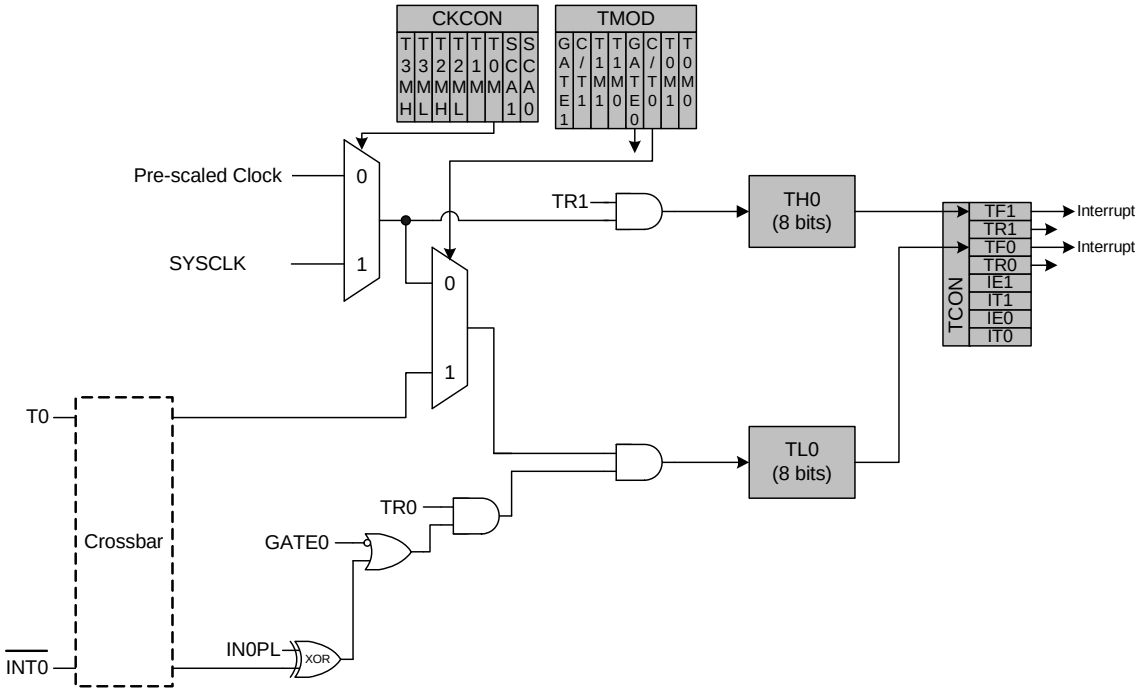

Figure 25.3. T0 Mode 3 Block Diagram

SFR Definition 25.2. TCON: Timer Control

Bit	7	6	5	4	3	2	1	0
Name	TF1	TR1	TF0	TR0	IE1	IT1	IE0	IT0
Type	R/W	R/W	R/W	R/W	R/W	R/W	R/W	R/W
Reset	0	0	0	0	0	0	0	0

SFR Page = 0x0; SFR Address = 0x88; Bit-Addressable

Bit	Name	Function
7	TF1	**Timer 1 Overflow Flag.** Set to 1 by hardware when Timer 1 overflows. This flag can be cleared by software but is automatically cleared when the CPU vectors to the Timer 1 interrupt service routine.
6	TR1	**Timer 1 Run Control.** Timer 1 is enabled by setting this bit to 1.
5	TF0	**Timer 0 Overflow Flag.** Set to 1 by hardware when Timer 0 overflows. This flag can be cleared by software but is automatically cleared when the CPU vectors to the Timer 0 interrupt service routine.
4	TR0	**Timer 0 Run Control.** Timer 0 is enabled by setting this bit to 1.
3	IE1	**External Interrupt 1.** This flag is set by hardware when an edge/level of type defined by IT1 is detected. It can be cleared by software but is automatically cleared when the CPU vectors to the External Interrupt 1 service routine in edge-triggered mode.
2	IT1	**Interrupt 1 Type Select.** This bit selects whether the configured $\overline{\text{INT1}}$ interrupt will be edge or level sensitive. $\overline{\text{INT1}}$ is configured active low or high by the IN1PL bit in the IT01CF register (see SFR Definition 12.7). 0: $\overline{\text{INT1}}$ is level triggered. 1: $\overline{\text{INT1}}$ is edge triggered.
1	IE0	**External Interrupt 0.** This flag is set by hardware when an edge/level of type defined by IT1 is detected. It can be cleared by software but is automatically cleared when the CPU vectors to the External Interrupt 0 service routine in edge-triggered mode.
0	IT0	**Interrupt 0 Type Select.** This bit selects whether the configured $\overline{\text{INT0}}$ interrupt will be edge or level sensitive. $\overline{\text{INT0}}$ is configured active low or high by the IN0PL bit in register IT01CF (see SFR Definition 12.7). 0: $\overline{\text{INT0}}$ is level triggered. 1: $\overline{\text{INT0}}$ is edge triggered.

SFR Definition 25.3. TMOD: Timer Mode

Bit	7	6	5	4	3	2	1	0
Name	GATE1	C/T1	T1M[1:0]		GATE0	C/T0	T0M[1:0]	
Type	R/W	R/W	R/W		R/W	R/W	R/W	
Reset	0	0	0	0	0	0	0	0

SFR Page = 0x0; SFR Address = 0x89

Bit	Name	Function
7	GATE1	**Timer 1 Gate Control.** 0: Timer 1 enabled when TR1 = 1 irrespective of $\overline{\text{INT1}}$ logic level. 1: Timer 1 enabled only when TR1 = 1 AND $\overline{\text{INT1}}$ is active as defined by bit IN1PL in register IT01CF (see SFR Definition 12.7).
6	C/T1	**Counter/Timer 1 Select.** 0: Timer: Timer 1 incremented by clock defined by T1M bit in register CKCON. 1: Counter: Timer 1 incremented by high-to-low transitions on external pin (T1).
5:4	T1M[1:0]	**Timer 1 Mode Select.** These bits select the Timer 1 operation mode. 00: Mode 0, 13-bit Counter/Timer 01: Mode 1, 16-bit Counter/Timer 10: Mode 2, 8-bit Counter/Timer with Auto-Reload 11: Mode 3, Timer 1 Inactive
3	GATE0	**Timer 0 Gate Control.** 0: Timer 0 enabled when TR0 = 1 irrespective of $\overline{\text{INT0}}$ logic level. 1: Timer 0 enabled only when TR0 = 1 AND $\overline{\text{INT0}}$ is active as defined by bit IN0PL in register IT01CF (see SFR Definition 12.7).
2	C/T0	**Counter/Timer 0 Select.** 0: Timer: Timer 0 incremented by clock defined by T0M bit in register CKCON. 1: Counter: Timer 0 incremented by high-to-low transitions on external pin (T0).
1:0	T0M[1:0]	**Timer 0 Mode Select.** These bits select the Timer 0 operation mode. 00: Mode 0, 13-bit Counter/Timer 01: Mode 1, 16-bit Counter/Timer 10: Mode 2, 8-bit Counter/Timer with Auto-Reload 11: Mode 3, Two 8-bit Counter/Timers

SFR Definition 25.4. TL0: Timer 0 Low Byte

Bit	7	6	5	4	3	2	1	0
Name	TL0[7:0]							
Type	R/W							
Reset	0	0	0	0	0	0	0	0

SFR Page = 0x0; SFR Address = 0x8A

Bit	Name	Function
7:0	TL0[7:0]	**Timer 0 Low Byte.** The TL0 register is the low byte of the 16-bit Timer 0.

SFR Definition 25.5. TL1: Timer 1 Low Byte

Bit	7	6	5	4	3	2	1	0
Name	TL1[7:0]							
Type	R/W							
Reset	0	0	0	0	0	0	0	0

SFR Page = 0x0; SFR Address = 0x8B

Bit	Name	Function
7:0	TL1[7:0]	**Timer 1 Low Byte.** The TL1 register is the low byte of the 16-bit Timer 1.

SFR Definition 25.6. TH0: Timer 0 High Byte

Bit	7	6	5	4	3	2	1	0
Name	TH0[7:0]							
Type	R/W							
Reset	0	0	0	0	0	0	0	0

SFR Page = 0x0; SFR Address = 0x8C

Bit	Name	Function
7:0	TH0[7:0]	**Timer 0 High Byte.** The TH0 register is the high byte of the 16-bit Timer 0.

SFR Definition 25.7. TH1: Timer 1 High Byte

Bit	7	6	5	4	3	2	1	0
Name	TH1[7:0]							
Type	R/W							
Reset	0	0	0	0	0	0	0	0

SFR Page = 0x0; SFR Address = 0x8D

Bit	Name	Function
7:0	TH1[7:0]	**Timer 1 High Byte.** The TH1 register is the high byte of the 16-bit Timer 1.

25.2. Timer 2

Timer 2 is a 16-bit timer formed by two 8-bit SFRs: TMR2L (low byte) and TMR2H (high byte). Timer 2 may operate in 16-bit auto-reload mode or (split) 8-bit auto-reload mode. The T2SPLIT bit (TMR2CN.3) defines the Timer 2 operation mode. Timer 2 can also be used in Capture Mode to measure the SmaRTClock or the Comparator 0 period with respect to another oscillator. The ability to measure the Comparator 0 period with respect to the system clock is makes using Touch Sense Switches very easy.

Timer 2 may be clocked by the system clock, the system clock divided by 12, SmaRTClock divided by 8, or Comparator 0 output. Note that the SmaRTClock divided by 8 and Comparator 0 output is synchronized with the system clock.

25.2.1. 16-bit Timer with Auto-Reload

When T2SPLIT (TMR2CN.3) is zero, Timer 2 operates as a 16-bit timer with auto-reload. Timer 2 can be clocked by SYSCLK, SYSCLK divided by 12, SmaRTClock divided by 8, or Comparator 0 output. As the 16-bit timer register increments and overflows from 0xFFFF to 0x0000, the 16-bit value in the Timer 2 reload registers (TMR2RLH and TMR2RLL) is loaded into the Timer 2 register as shown in Figure 25.4, and the Timer 2 High Byte Overflow Flag (TMR2CN.7) is set. If Timer 2 interrupts are enabled (if IE.5 is set), an interrupt will be generated on each Timer 2 overflow. Additionally, if Timer 2 interrupts are enabled and the TF2LEN bit is set (TMR2CN.5), an interrupt will be generated each time the lower 8 bits (TMR2L) overflow from 0xFF to 0x00.

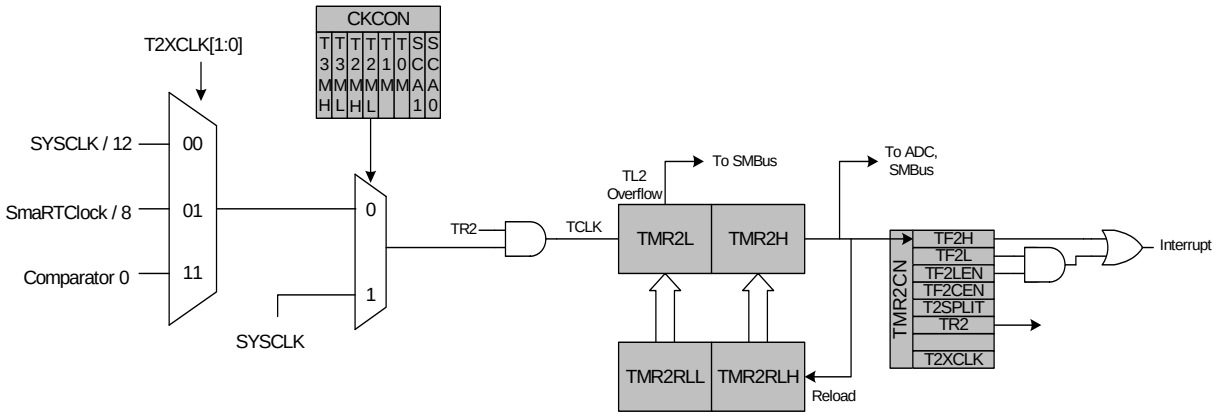

Figure 25.4. Timer 2 16-Bit Mode Block Diagram

25.2.2. 8-bit Timers with Auto-Reload

When T2SPLIT is set, Timer 2 operates as two 8-bit timers (TMR2H and TMR2L). Both 8-bit timers operate in auto-reload mode as shown in Figure 25.5. TMR2RLL holds the reload value for TMR2L; TMR2RLH holds the reload value for TMR2H. The TR2 bit in TMR2CN handles the run control for TMR2H. TMR2L is always running when configured for 8-bit Mode.

Each 8-bit timer may be configured to use SYSCLK, SYSCLK divided by 12, SmaRTClock divided by 8 or Comparator 0 output. The Timer 2 Clock Select bits (T2MH and T2ML in CKCON) select either SYSCLK or the clock defined by the Timer 2 External Clock Select bits (T2XCLK[1:0] in TMR2CN), as follows:

T2MH	T2XCLK[1:0]	TMR2H Clock Source
0	00	SYSCLK / 12
0	01	SmaRTClock / 8
0	10	Reserved
0	11	Comparator 0
1	X	SYSCLK

T2ML	T2XCLK[1:0]	TMR2L Clock Source
0	00	SYSCLK / 12
0	01	SmaRTClock / 8
0	10	Reserved
0	11	Comparator 0
1	X	SYSCLK

The TF2H bit is set when TMR2H overflows from 0xFF to 0x00; the TF2L bit is set when TMR2L overflows from 0xFF to 0x00. When Timer 2 interrupts are enabled (IE.5), an interrupt is generated each time TMR2H overflows. If Timer 2 interrupts are enabled and TF2LEN (TMR2CN.5) is set, an interrupt is generated each time either TMR2L or TMR2H overflows. When TF2LEN is enabled, software must check the TF2H and TF2L flags to determine the source of the Timer 2 interrupt. The TF2H and TF2L interrupt flags are not cleared by hardware and must be manually cleared by software.

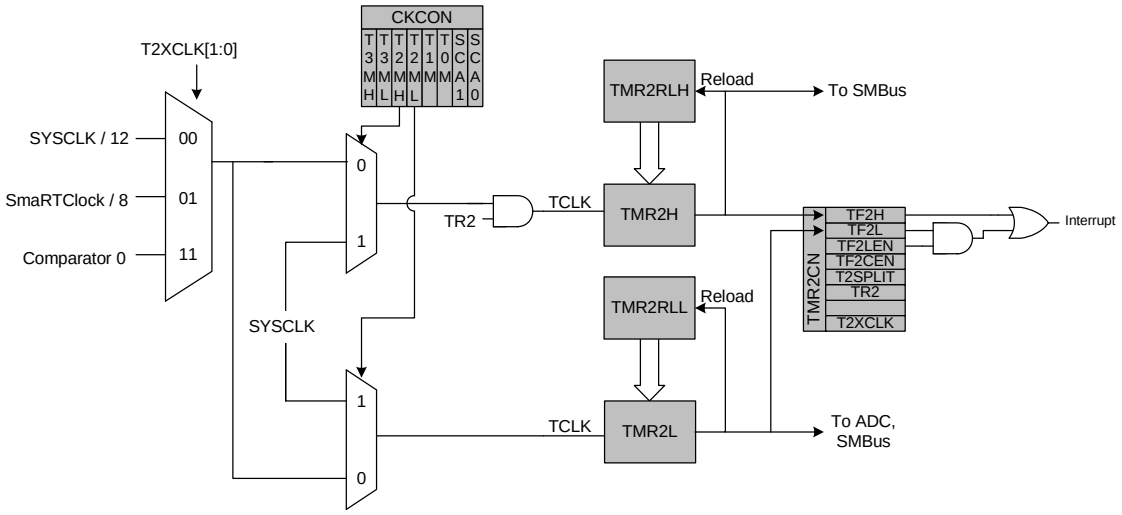

Figure 25.5. Timer 2 8-Bit Mode Block Diagram

25.2.3. Comparator 0/SmaRTClock Capture Mode

The Capture Mode in Timer 2 allows either Comparator 0 or the SmaRTClock period to be measured against the system clock or the system clock divided by 12. Comparator 0 and the SmaRTClock period can also be compared against each other. Timer 2 Capture Mode is enabled by setting TF2CEN to 1. Timer 2 should be in 16-bit auto-reload mode when using Capture Mode.

When Capture Mode is enabled, a capture event will be generated either every Comparator 0 rising edge or every 8 SmaRTClock clock cycles, depending on the T2XCLK1 setting. When the capture event occurs, the contents of Timer 2 (TMR2H:TMR2L) are loaded into the Timer 2 reload registers (TMR2RLH:TMR2RLL) and the TF2H flag is set (triggering an interrupt if Timer 2 interrupts are enabled). By recording the difference between two successive timer capture values, the Comparator 0 or SmaRTClock period can be determined with respect to the Timer 2 clock. The Timer 2 clock should be much faster than the capture clock to achieve an accurate reading.

For example, if T2ML = 1b, T2XCLK1 = 0b, and TF2CEN = 1b, Timer 2 will clock every SYSCLK and capture every SmaRTClock clock divided by 8. If the SYSCLK is 24.5 MHz and the difference between two successive captures is 5984, then the SmaRTClock clock is as follows:

24.5 MHz/(5984/8) = 0.032754 MHz or 32.754 kHz.

This mode allows software to determine the exact SmaRTClock frequency in self-oscillate mode and the time between consecutive Comparator 0 rising edges, which is useful for detecting changes in the capacitance of a Touch Sense Switch.

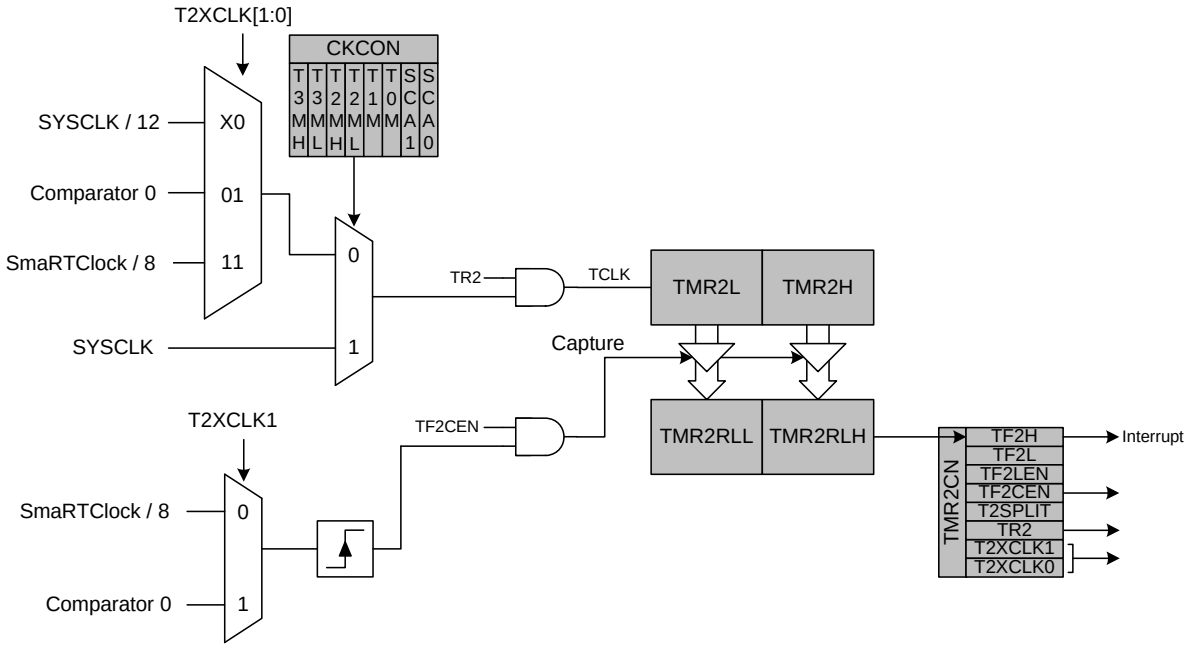

Figure 25.6. Timer 2 Capture Mode Block Diagram

SFR Definition 25.8. TMR2CN: Timer 2 Control

Bit	7	6	5	4	3	2	1	0
Name	TF2H	TF2L	TF2LEN	TF2CEN	T2SPLIT	TR2	T2XCLK[1:0]	
Type	R/W	R/W	R/W	R/W	R/W	R/W	R/W	
Reset	0	0	0	0	0	0	0	0

SFR Page = 0x0; SFR Address = 0xC8; Bit-Addressable

Bit	Name	Function
7	TF2H	**Timer 2 High Byte Overflow Flag.** Set by hardware when the Timer 2 high byte overflows from 0xFF to 0x00. In 16 bit mode, this will occur when Timer 2 overflows from 0xFFFF to 0x0000. When the Timer 2 interrupt is enabled, setting this bit causes the CPU to vector to the Timer 2 interrupt service routine. This bit is not automatically cleared by hardware.
6	TF2L	**Timer 2 Low Byte Overflow Flag.** Set by hardware when the Timer 2 low byte overflows from 0xFF to 0x00. TF2L will be set when the low byte overflows regardless of the Timer 2 mode. This bit is not automatically cleared by hardware.
5	TF2LEN	**Timer 2 Low Byte Interrupt Enable.** When set to 1, this bit enables Timer 2 Low Byte interrupts. If Timer 2 interrupts are also enabled, an interrupt will be generated when the low byte of Timer 2 overflows.
4	TF2CEN	**Timer 2 Capture Enable.** When set to 1, this bit enables Timer 2 Capture Mode.
3	T2SPLIT	**Timer 2 Split Mode Enable.** When set to 1, Timer 2 operates as two 8-bit timers with auto-reload. Otherwise, Timer 2 operates in 16-bit auto-reload mode.
2	TR2	**Timer 2 Run Control.** Timer 2 is enabled by setting this bit to 1. In 8-bit mode, this bit enables/disables TMR2H only; TMR2L is always enabled in split mode.
1:0	T2XCLK[1:0]	**Timer 2 External Clock Select.** This bit selects the “external” and “capture trigger” clock sources for Timer 2. If Timer 2 is in 8-bit mode, this bit selects the “external” clock source for both timer bytes. Timer 2 Clock Select bits (T2MH and T2ML in register CKCON) may still be used to select between the “external” clock and the system clock for either timer. Note: External clock sources are synchronized with the system clock. 00: External Clock is SYSCLK/12. Capture trigger is SmaRTClock/8. 01: External Clock is Comparator 0. Capture trigger is SmaRTClock/8. 10: External Clock is SYSCLK/12. Capture trigger is Comparator 0. 11: External Clock is SmaRTClock/8. Capture trigger is Comparator 0.

SFR Definition 25.9. TMR2RLL: Timer 2 Reload Register Low Byte

Bit	7	6	5	4	3	2	1	0
Name	TMR2RLL[7:0]							
Type	R/W							
Reset	0	0	0	0	0	0	0	0

SFR Page = 0x0; SFR Address = 0xCA

Bit	Name	Function
7:0	TMR2RLL[7:0]	**Timer 2 Reload Register Low Byte.** TMR2RLL holds the low byte of the reload value for Timer 2.

SFR Definition 25.10. TMR2RLH: Timer 2 Reload Register High Byte

Bit	7	6	5	4	3	2	1	0
Name	TMR2RLH[7:0]							
Type	R/W							
Reset	0	0	0	0	0	0	0	0

SFR Page = 0x0; SFR Address = 0xCB

Bit	Name	Function
7:0	TMR2RLH[7:0]	**Timer 2 Reload Register High Byte.** TMR2RLH holds the high byte of the reload value for Timer 2.

SFR Definition 25.11. TMR2L: Timer 2 Low Byte

Bit	7	6	5	4	3	2	1	0
Name	TMR2L[7:0]							
Type	R/W							
Reset	0	0	0	0	0	0	0	0

SFR Page = 0x0; SFR Address = 0xCC

Bit	Name	Function
7:0	TMR2L[7:0]	**Timer 2 Low Byte.** In 16-bit mode, the TMR2L register contains the low byte of the 16-bit Timer 2. In 8-bit mode, TMR2L contains the 8-bit low byte timer value.

SFR Definition 25.12. TMR2H Timer 2 High Byte

Bit	7	6	5	4	3	2	1	0
Name	TMR2H[7:0]							
Type	R/W							
Reset	0	0	0	0	0	0	0	0

SFR Page = 0x0; SFR Address = 0xCD

Bit	Name	Function
7:0	TMR2H[7:0]	**Timer 2 Low Byte.** In 16-bit mode, the TMR2H register contains the high byte of the 16-bit Timer 2. In 8-bit mode, TMR2H contains the 8-bit high byte timer value.

25.3. Timer 3

Timer 3 is a 16-bit timer formed by two 8-bit SFRs: TMR3L (low byte) and TMR3H (high byte). Timer 3 may operate in 16-bit auto-reload mode or (split) 8-bit auto-reload mode. The T3SPLIT bit (TMR2CN.3) defines the Timer 3 operation mode. Timer 3 can also be used in Capture Mode to measure the external oscillator source or the Comparator 1 period with respect to another oscillator. The ability to measure the Comparator 1 period with respect to the system clock is makes using Touch Sense Switches very easy.

Timer 3 may be clocked by the system clock, the system clock divided by 12, external oscillator source divided by 8, or Comparator 1 output. The external oscillator source divided by 8 and Comparator 1 output is synchronized with the system clock.

25.3.1. 16-bit Timer with Auto-Reload

When T3SPLIT (TMR3CN.3) is zero, Timer 3 operates as a 16-bit timer with auto-reload. Timer 3 can be clocked by SYSCLK, SYSCLK divided by 12, external oscillator clock source divided by 8, or Comparator 1 output. As the 16-bit timer register increments and overflows from 0xFFFF to 0x0000, the 16-bit value in the Timer 3 reload registers (TMR3RLH and TMR3RLL) is loaded into the Timer 3 register as shown in Figure 25.7, and the Timer 3 High Byte Overflow Flag (TMR3CN.7) is set. If Timer 3 interrupts are enabled (if EIE1.7 is set), an interrupt will be generated on each Timer 3 overflow. Additionally, if Timer 3 interrupts are enabled and the TF3LEN bit is set (TMR3CN.5), an interrupt will be generated each time the lower 8 bits (TMR3L) overflow from 0xFF to 0x00.

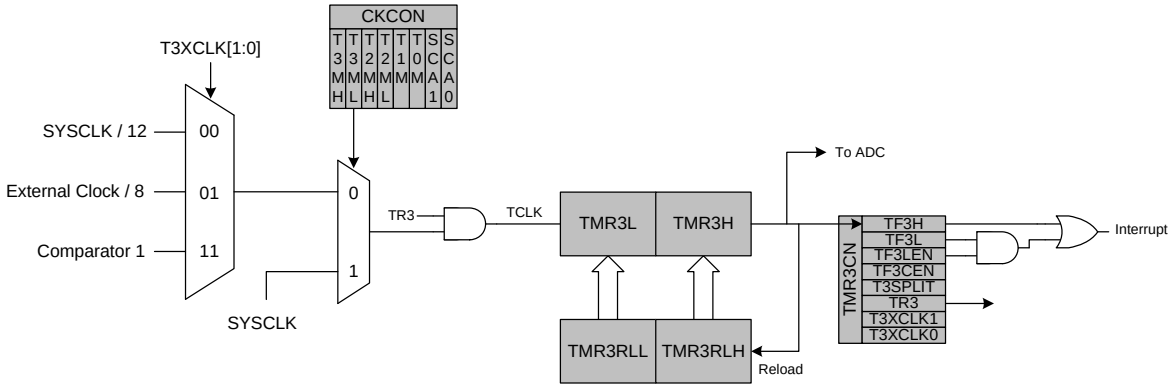

Figure 25.7. Timer 3 16-Bit Mode Block Diagram

25.3.2. 8-bit Timers with Auto-Reload

When T3SPLIT is set, Timer 3 operates as two 8-bit timers (TMR3H and TMR3L). Both 8-bit timers operate in auto-reload mode as shown in Figure 25.8. TMR3RLL holds the reload value for TMR3L; TMR3RLH holds the reload value for TMR3H. The TR3 bit in TMR3CN handles the run control for TMR3H. TMR3L is always running when configured for 8-bit Mode.

Each 8-bit timer may be configured to use SYSCLK, SYSCLK divided by 12, the external oscillator clock source divided by 8, or Comparator 1. The Timer 3 Clock Select bits (T3MH and T3ML in CKCON) select either SYSCLK or the clock defined by the Timer 3 External Clock Select bits (T3XCLK[1:0] in TMR3CN), as follows:

T3MH	T3XCLK[1:0]	TMR3H Clock Source
0	00	SYSCLK / 12
0	01	Comparator 1
0	10	Reserved
0	11	External Clock / 8
1	X	SYSCLK

T3ML	T3XCLK[1:0]	TMR3L Clock Source
0	00	SYSCLK / 12
0	01	Comparator 1
0	10	Reserved
0	11	External Clock / 8
1	X	SYSCLK

The TF3H bit is set when TMR3H overflows from 0xFF to 0x00; the TF3L bit is set when TMR3L overflows from 0xFF to 0x00. When Timer 3 interrupts are enabled, an interrupt is generated each time TMR3H overflows. If Timer 3 interrupts are enabled and TF3LEN (TMR3CN.5) is set, an interrupt is generated each time either TMR3L or TMR3H overflows. When TF3LEN is enabled, software must check the TF3H and TF3L flags to determine the source of the Timer 3 interrupt. The TF3H and TF3L interrupt flags are not cleared by hardware and must be manually cleared by software.

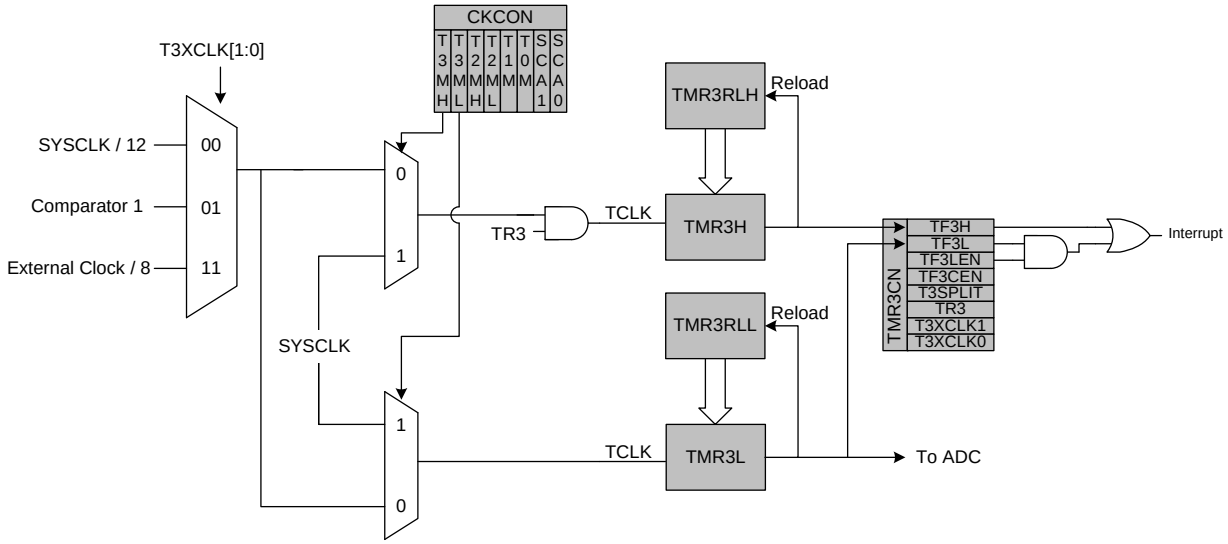

Figure 25.8. Timer 3 8-Bit Mode Block Diagram.

25.3.3. Comparator 1/External Oscillator Capture Mode

The Capture Mode in Timer 3 allows either Comparator 1 or the external oscillator period to be measured against the system clock or the system clock divided by 12. Comparator 1 and the external oscillator period can also be compared against each other.

Setting TF3CEN to 1 enables the Comparator 1/External Oscillator Capture Mode for Timer 3. In this mode, T3SPLIT should be set to 0, as the full 16-bit timer is used.

When Capture Mode is enabled, a capture event will be generated either every Comparator 1 rising edge or every 8 external clock cycles, depending on the T3XCLK1 setting. When the capture event occurs, the contents of Timer 3 (TMR3H:TMR3L) are loaded into the Timer 3 reload registers (TMR3RLH:TMR3RLL) and the TF3H flag is set (triggering an interrupt if Timer 3 interrupts are enabled). By recording the difference between two successive timer capture values, the Comparator 1 or external clock period can be determined with respect to the Timer 3 clock. The Timer 3 clock should be much faster than the capture clock to achieve an accurate reading.

For example, if T3ML = 1b, T3XCLK1 = 0b, and TF3CEN = 1b, Timer 3 will clock every SYSCLK and capture every Comparator 1 rising edge. If SYSCLK is 24.5 MHz and the difference between two successive captures is 350 counts, then the Comparator 1 period is:

350 x (1 / 24.5 MHz) = 14.2 µs.

This mode allows software to determine the exact frequency of the external oscillator in C and RC mode or the time between consecutive Comparator 0 rising edges, which is useful for detecting changes in the capacitance of a Touch Sense Switch.

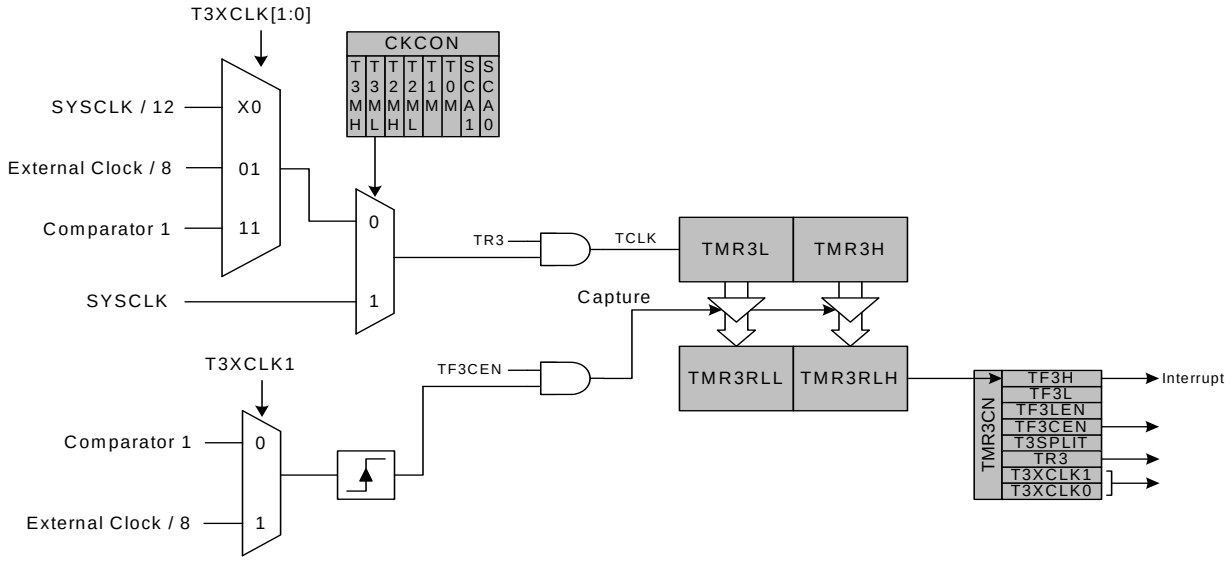

Figure 25.9. Timer 3 Capture Mode Block Diagram

SFR Definition 25.13. TMR3CN: Timer 3 Control

Bit	7	6	5	4	3	2	1	0
Name	TF3H	TF3L	TF3LEN	TF3CEN	T3SPLIT	TR3	T3XCLK[1:0]	
Type	R/W	R/W	R/W	R/W	R/W	R/W	R/W	
Reset	0	0	0	0	0	0	0	0

SFR Page = 0x0; SFR Address = 0x91

Bit	Name	Function
7	TF3H	**Timer 3 High Byte Overflow Flag.** Set by hardware when the Timer 3 high byte overflows from 0xFF to 0x00. In 16 bit mode, this will occur when Timer 3 overflows from 0xFFFF to 0x0000. When the Timer 3 interrupt is enabled, setting this bit causes the CPU to vector to the Timer 3 interrupt service routine. This bit is not automatically cleared by hardware.
6	TF3L	**Timer 3 Low Byte Overflow Flag.** Set by hardware when the Timer 3 low byte overflows from 0xFF to 0x00. TF3L will be set when the low byte overflows regardless of the Timer 3 mode. This bit is not automatically cleared by hardware.
5	TF3LEN	**Timer 3 Low Byte Interrupt Enable.** When set to 1, this bit enables Timer 3 Low Byte interrupts. If Timer 3 interrupts are also enabled, an interrupt will be generated when the low byte of Timer 3 overflows.
4	TF3CEN	**Timer 3 Comparator 1/External Oscillator Capture Enable.** When set to 1, this bit enables Timer 3 Capture Mode.
3	T3SPLIT	**Timer 3 Split Mode Enable.** When this bit is set, Timer 3 operates as two 8-bit timers with auto-reload. 0: Timer 3 operates in 16-bit auto-reload mode. 1: Timer 3 operates as two 8-bit auto-reload timers.
2	TR3	**Timer 3 Run Control.** Timer 3 is enabled by setting this bit to 1. In 8-bit mode, this bit enables/disables TMR3H only; TMR3L is always enabled in split mode.
1:0	T3XCLK[1:0]	**Timer 3 External Clock Select.** This bit selects the “external” and “capture trigger” clock sources for Timer 3. If Timer 3 is in 8-bit mode, this bit selects the “external” clock source for both timer bytes. Timer 3 Clock Select bits (T3MH and T3ML in register CKCON) may still be used to select between the “external” clock and the system clock for either timer. Note: External clock sources are synchronized with the system clock. 00: External Clock is SYSCLK /12. Capture trigger is Comparator 1. 01: External Clock is External Oscillator/8. Capture trigger is Comparator 1. 10: External Clock is SYSCLK/12. Capture trigger is External Oscillator/8. 11: External Clock is Comparator 1. Capture trigger is External Oscillator/8.

SFR Definition 25.14. TMR3RLL: Timer 3 Reload Register Low Byte

Bit	7	6	5	4	3	2	1	0
Name	TMR3RLL[7:0]							
Type	R/W							
Reset	0	0	0	0	0	0	0	0

SFR Page = 0x0; SFR Address = 0x92

Bit	Name	Function
7:0	TMR3RLL[7:0]	**Timer 3 Reload Register Low Byte.** TMR3RLL holds the low byte of the reload value for Timer 3.

SFR Definition 25.15. TMR3RLH: Timer 3 Reload Register High Byte

Bit	7	6	5	4	3	2	1	0
Name	TMR3RLH[7:0]							
Type	R/W							
Reset	0	0	0	0	0	0	0	0

SFR Page = 0x0; SFR Address = 0x93

Bit	Name	Function
7:0	TMR3RLH[7:0]	**Timer 3 Reload Register High Byte.** TMR3RLH holds the high byte of the reload value for Timer 3.

SFR Definition 25.16. TMR3L: Timer 3 Low Byte

Bit	7	6	5	4	3	2	1	0
Name	TMR3L[7:0]							
Type	R/W							
Reset	0	0	0	0	0	0	0	0

SFR Page = 0x0; SFR Address = 0x94

Bit	Name	Function
7:0	TMR3L[7:0]	**Timer 3 Low Byte.** In 16-bit mode, the TMR3L register contains the low byte of the 16-bit Timer 3. In 8-bit mode, TMR3L contains the 8-bit low byte timer value.

SFR Definition 25.17. TMR3H Timer 3 High Byte

Bit	7	6	5	4	3	2	1	0
Name	TMR3H[7:0]							
Type	R/W							
Reset	0	0	0	0	0	0	0	0

SFR Page = 0x0; SFR Address = 0x95

Bit	Name	Function
7:0	TMR3H[7:0]	**Timer 3 High Byte.** In 16-bit mode, the TMR3H register contains the high byte of the 16-bit Timer 3. In 8-bit mode, TMR3H contains the 8-bit high byte timer value.

26. Programmable Counter Array

The Programmable Counter Array (PCA0) provides enhanced timer functionality while requiring less CPU intervention than the standard 8051 counter/timers. The PCA consists of a dedicated 16-bit counter/timer and six 16-bit capture/compare modules. Each capture/compare module has its own associated I/O line (CEXn) which is routed through the Crossbar to Port I/O when enabled. The counter/timer is driven by a programmable timebase that can select between seven sources: system clock, system clock divided by four, system clock divided by twelve, the external oscillator clock source divided by 8, SmaRTClock divided by 8 ('F912 and 'F902 devices only), Timer 0 overflows, or an external clock signal on the ECI input pin. Each capture/compare module may be configured to operate independently in one of six modes: Edge-Triggered Capture, Software Timer, High-Speed Output, Frequency Output, 8 to 11-Bit PWM, or 16-Bit PWM (each mode is described in Section “26.3. Capture/Compare Modules” on page 305). The external oscillator clock option is ideal for real-time clock (RTC) functionality, allowing the PCA to be clocked by a precision external oscillator while the internal oscillator drives the system clock. The PCA is configured and controlled through the system controller's Special Function Registers. The PCA block diagram is shown in Figure 26.1.

Important Note: The PCA Module 5 may be used as a watchdog timer (WDT), and is enabled in this mode following a system reset. **Access to certain PCA registers is restricted while WDT mode is enabled**. See Section 26.4 for details.

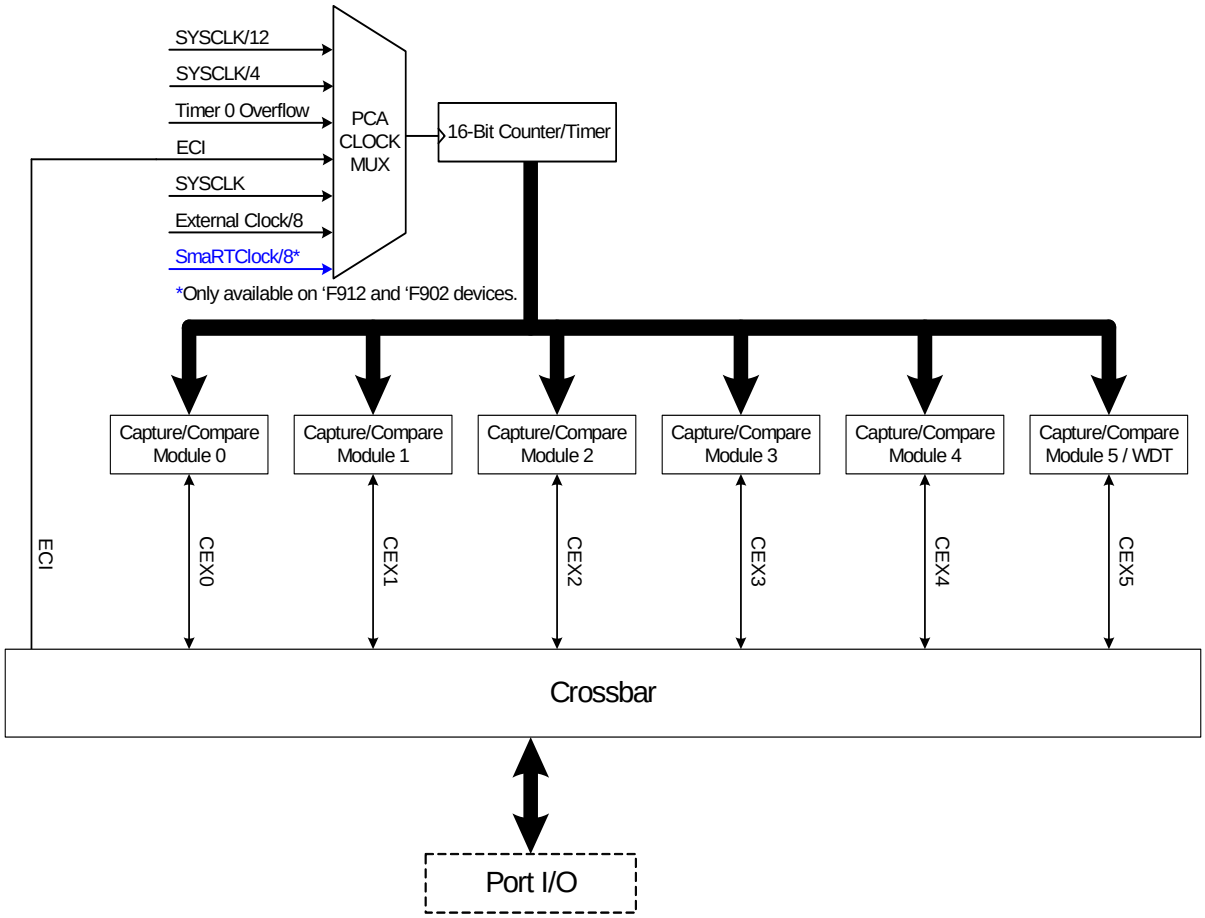

Figure 26.1. PCA Block Diagram

26.1. PCA Counter/Timer

The 16-bit PCA counter/timer consists of two 8-bit SFRs: PCA0L and PCA0H. PCA0H is the high byte (MSB) of the 16-bit counter/timer and PCA0L is the low byte (LSB). Reading PCA0L automatically latches the value of PCA0H into a “snapshot” register; the following PCA0H read accesses this “snapshot” register. **Reading the PCA0L Register first guarantees an accurate reading of the entire 16-bit PCA0 counter.** Reading PCA0H or PCA0L does not disturb the counter operation. The CPS2–CPS0 bits in the PCA0MD register select the timebase for the counter/timer as shown in Table 26.1.

When the counter/timer overflows from 0xFFFF to 0x0000, the Counter Overflow Flag (CF) in PCA0MD is set to logic 1 and an interrupt request is generated if CF interrupts are enabled. Setting the ECF bit in PCA0MD to logic 1 enables the CF flag to generate an interrupt request. The CF bit is not automatically cleared by hardware when the CPU vectors to the interrupt service routine, and must be cleared by software. Clearing the CIDL bit in the PCA0MD register allows the PCA to continue normal operation while the CPU is in Idle mode.

Table 26.1. PCA Timebase Input Options

CPS2	CPS1	CPS0	Timebase
0	0	0	System clock divided by 12
0	0	1	System clock divided by 4
0	1	0	Timer 0 overflow
0	1	1	High-to-low transitions on ECI (max rate = system clock divided by 4)
1	0	0	System clock
1	0	1	External oscillator source divided by 8[1]
1	1	0	SmaRTClock oscillator source divided by 8[2]
1	1	1	Reserved

Notes:
1. External oscillator source divided by 8 is synchronized with the system clock.
2. SmaRTClock oscillator source divided by 8 is synchronized with the system clock and is only available on 'F912 and 'F902 devices. This setting is reserved on all other devices.

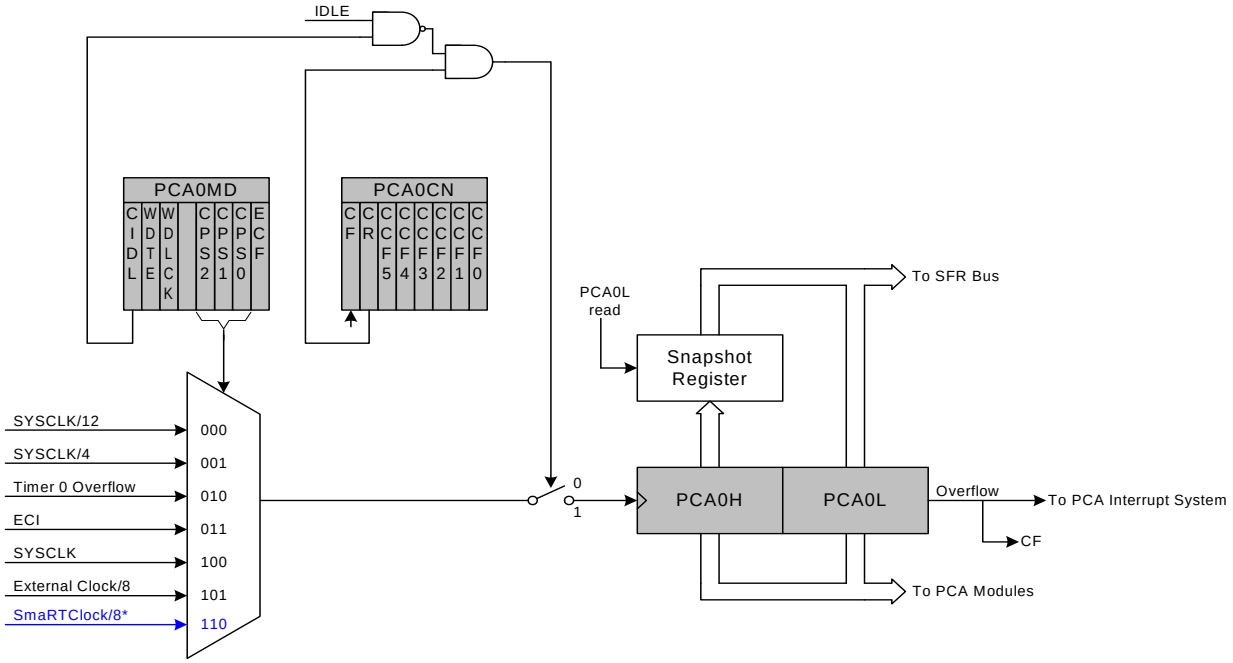

*Only available on 'F912 and 'F902 devices.

Figure 26.2. PCA Counter/Timer Block Diagram

26.2. PCA0 Interrupt Sources

Figure 26.3 shows a diagram of the PCA interrupt tree. There are eight independent event flags that can be used to generate a PCA0 interrupt. They are: the main PCA counter overflow flag (CF), which is set upon a 16-bit overflow of the PCA0 counter, an intermediate overflow flag (COVF), which can be set on an overflow from the 8th, 9th, 10th, or 11th bit of the PCA0 counter, and the individual flags for each PCA channel (CCF0, CCF1, CCF2, CCF3, CCF4, and CCF5), which are set according to the operation mode of that module. These event flags are always set when the trigger condition occurs. Each of these flags can be individually selected to generate a PCA0 interrupt, using the corresponding interrupt enable flag (ECF for CF, ECOV for COVF, and ECCFn for each CCFn). PCA0 interrupts must be globally enabled before any individual interrupt sources are recognized by the processor. PCA0 interrupts are globally enabled by setting the EA bit and the EPCA0 bit to logic 1.

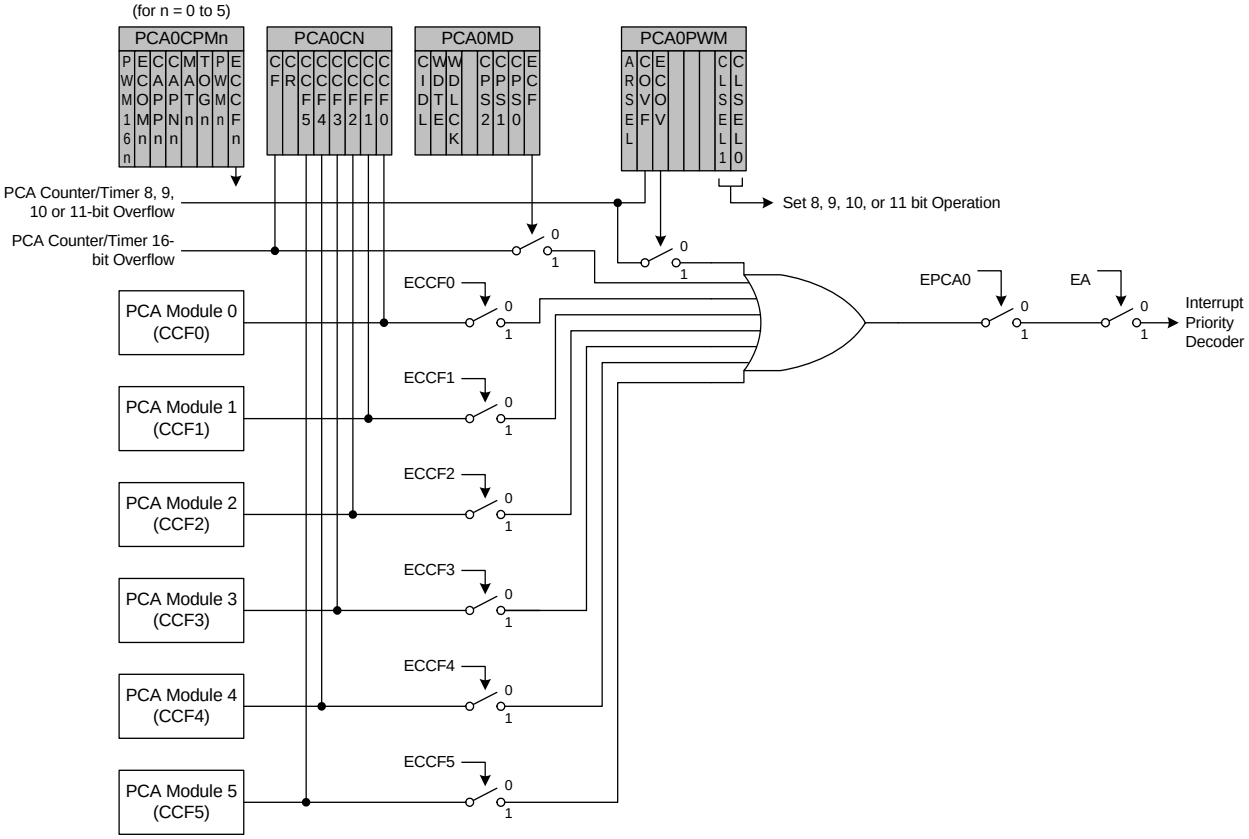

Figure 26.3. PCA Interrupt Block Diagram

26.3. Capture/Compare Modules

Each module can be configured to operate independently in one of six operation modes: edge-triggered capture, software timer, high speed output, frequency output, 8 to 11-bit pulse width modulator, or 16-bit pulse width modulator. Each module has special function registers (SFRs) associated with it in the CIP-51 system controller. These registers are used to exchange data with a module and configure the module's mode of operation. Table 26.2 summarizes the bit settings in the PCA0CPMn and PCA0PWM registers used to select the PCA capture/compare module's operating mode. Note that all modules set to use 8, 9, 10, or 11-bit PWM mode must use the same cycle length (8-11 bits). Setting the ECCFn bit in a PCA0CPMn register enables the module's CCFn interrupt.

Table 26.2. PCA0CPM and PCA0PWM Bit Settings for PCA Capture/Compare Modules

Operational Mode	PCA0CPMn								PCA0PWM				
Bit Number	7	6	5	4	3	2	1	0	7	6	5	4-2	1–0
Capture triggered by positive edge on CEXn	X	X	1	0	0	0	0	A	0	X	B	XXX	XX
Capture triggered by negative edge on CEXn	X	X	0	1	0	0	0	A	0	X	B	XXX	XX
Capture triggered by any transition on CEXn	X	X	1	1	0	0	0	A	0	X	B	XXX	XX
Software Timer	X	C	0	0	1	0	0	A	0	X	B	XXX	XX
High-Speed Output	X	C	0	0	1	1	0	A	0	X	B	XXX	XX
Frequency Output	X	C	0	0	0	1	1	A	0	X	B	XXX	XX
8-Bit Pulse Width Modulator (Note 7)	0	C	0	0	E	0	1	A	0	X	B	XXX	00
9-Bit Pulse Width Modulator (Note 7)	0	C	0	0	E	0	1	A	D	X	B	XXX	01
10-Bit Pulse Width Modulator (Note 7)	0	C	0	0	E	0	1	A	D	X	B	XXX	10
11-Bit Pulse Width Modulator (Note 7)	0	C	0	0	E	0	1	A	D	X	B	XXX	11
16-Bit Pulse Width Modulator	1	C	0	0	E	0	1	A	0	X	B	XXX	XX

Notes:
1. X = Don't Care (no functional difference for individual module if 1 or 0).
2. A = Enable interrupts for this module (PCA interrupt triggered on CCFn set to 1).
3. B = Enable 8th, 9th, 10th or 11th bit overflow interrupt (Depends on setting of CLSEL[1:0]).
4. C = When set to 0, the digital comparator is off. For high speed and frequency output modes, the associated pin will not toggle. In any of the PWM modes, this generates a 0% duty cycle (output = 0).
5. D = Selects whether the Capture/Compare register (0) or the Auto-Reload register (1) for the associated channel is accessed via addresses PCA0CPHn and PCA0CPLn.
6. E = When set, a match event will cause the CCFn flag for the associated channel to be set.
7. All modules set to 8, 9, 10 or 11-bit PWM mode use the same cycle length setting.

26.3.1. Edge-triggered Capture Mode

In this mode, a valid transition on the CEXn pin causes the PCA to capture the value of the PCA counter/timer and load it into the corresponding module's 16-bit capture/compare register (PCA0CPLn and PCA0CPHn). The CAPPn and CAPNn bits in the PCA0CPMn register are used to select the type of transition that triggers the capture: low-to-high transition (positive edge), high-to-low transition (negative edge), or either transition (positive or negative edge). When a capture occurs, the Capture/Compare Flag (CCFn) in PCA0CN is set to logic 1. An interrupt request is generated if the CCFn interrupt for that module is enabled. The CCFn bit is not automatically cleared by hardware when the CPU vectors to the interrupt service routine, and must be cleared by software. If both CAPPn and CAPNn bits are set to logic 1, then the state of the Port pin associated with CEXn can be read directly to determine whether a rising-edge or falling-edge caused the capture.

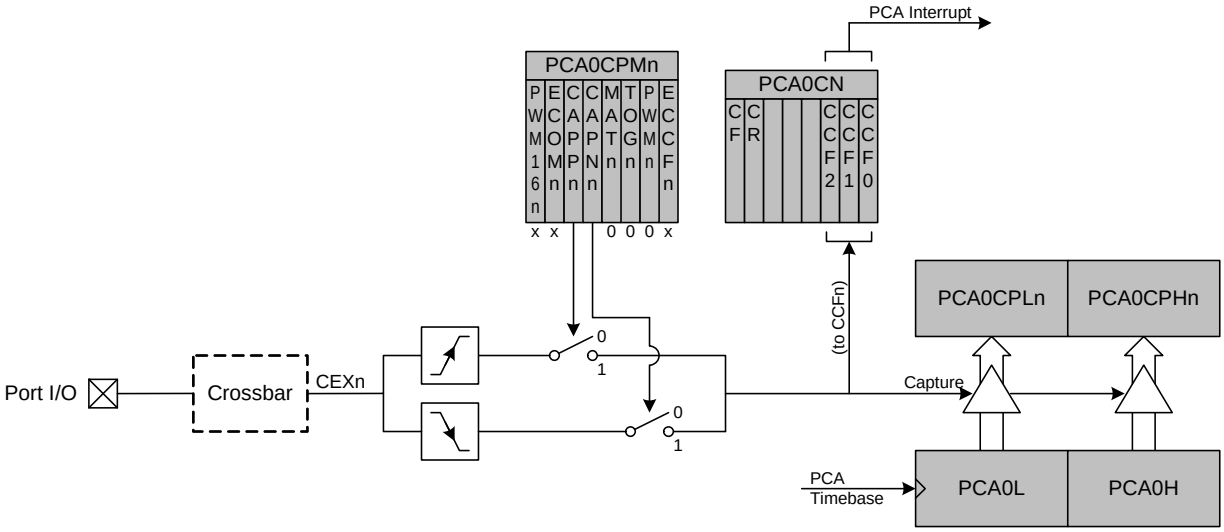

Figure 26.4. PCA Capture Mode Diagram

Note: The CEXn input signal must remain high or low for at least 2 system clock cycles to be recognized by the hardware.

26.3.2. Software Timer (Compare) Mode

In Software Timer mode, the PCA counter/timer value is compared to the module's 16-bit capture/compare register (PCA0CPHn and PCA0CPLn). When a match occurs, the Capture/Compare Flag (CCFn) in PCA0CN is set to logic 1. An interrupt request is generated if the CCFn interrupt for that module is enabled. The CCFn bit is not automatically cleared by hardware when the CPU vectors to the interrupt service routine, and must be cleared by software. Setting the ECOMn and MATn bits in the PCA0CPMn register enables Software Timer mode.

Important Note About Capture/Compare Registers: When writing a 16-bit value to the PCA0 Capture/Compare registers, the low byte should always be written first. Writing to PCA0CPLn clears the ECOMn bit to 0; writing to PCA0CPHn sets ECOMn to 1.

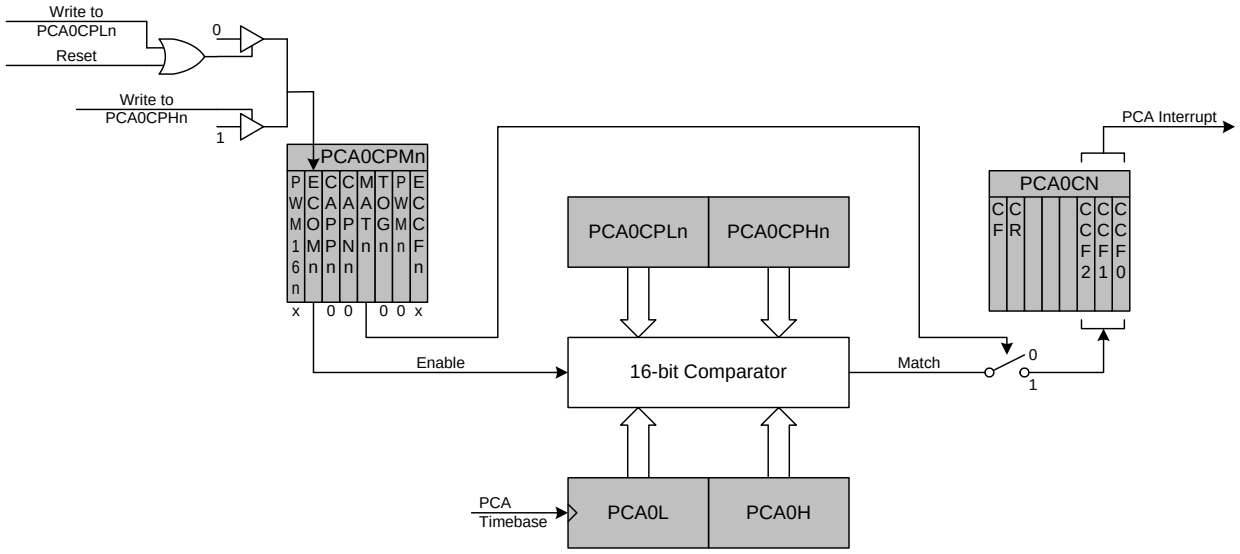

Figure 26.5. PCA Software Timer Mode Diagram

26.3.3. High-Speed Output Mode

In High-speed output mode, a module's associated CEXn pin is toggled each time a match occurs between the PCA Counter and the module's 16-bit capture/compare register (PCA0CPHn and PCA0CPLn). When a match occurs, the Capture/Compare Flag (CCFn) in PCA0CN is set to logic 1. An interrupt request is generated if the CCFn interrupt for that module is enabled. The CCFn bit is not automatically cleared by hardware when the CPU vectors to the interrupt service routine, and must be cleared by software. Setting the TOGn, MATn, and ECOMn bits in the PCA0CPMn register enables the High-Speed Output mode. If ECOMn is cleared, the associated pin will retain its state, and not toggle on the next match event.

Important Note About Capture/Compare Registers: When writing a 16-bit value to the PCA0 Capture/Compare registers, the low byte should always be written first. Writing to PCA0CPLn clears the ECOMn bit to 0; writing to PCA0CPHn sets ECOMn to 1.

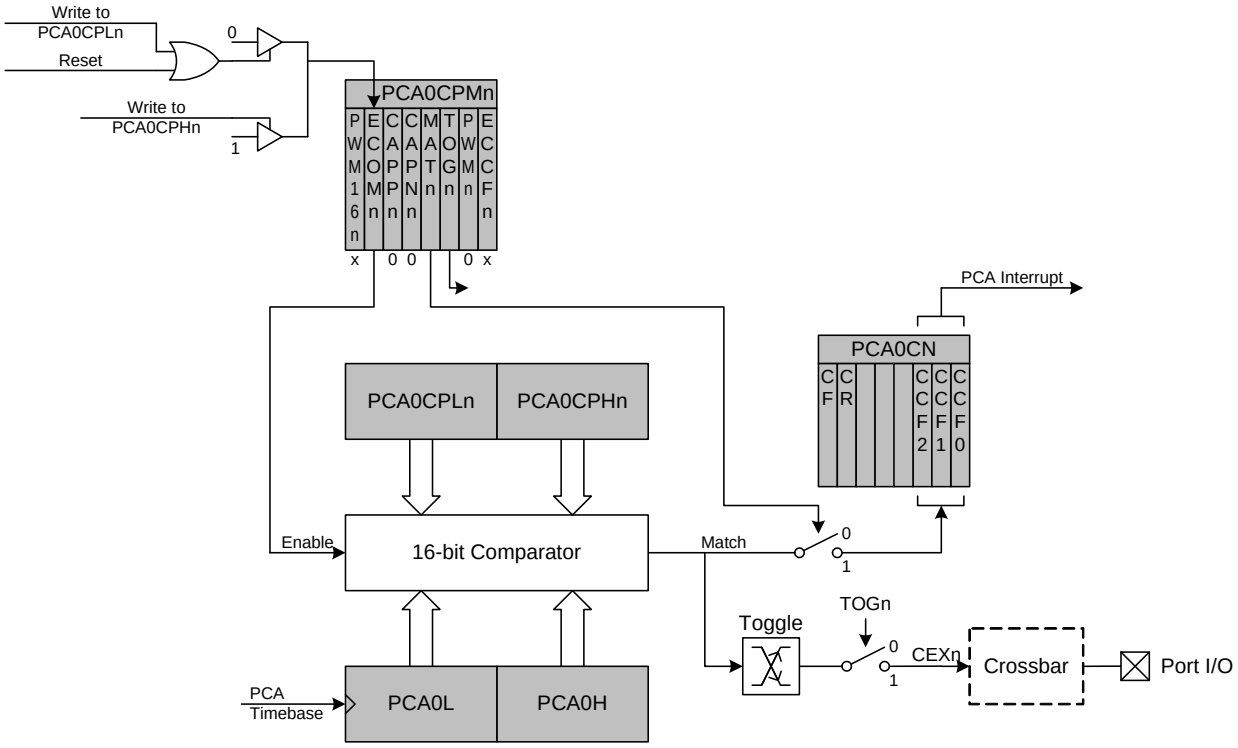

Figure 26.6. PCA High-Speed Output Mode Diagram

26.3.4. Frequency Output Mode

Frequency Output Mode produces a programmable-frequency square wave on the module's associated CEXn pin. The capture/compare module high byte holds the number of PCA clocks to count before the output is toggled. The frequency of the square wave is then defined by Equation 26.1.

$$F_{CEXn} = \frac{F_{PCA}}{2 \times PCA0CPHn}$$

Note: A value of 0x00 in the PCA0CPHn register is equal to 256 for this equation.

Equation 26.1. Square Wave Frequency Output

Where F_{PCA} is the frequency of the clock selected by the CPS2–0 bits in the PCA mode register, PCA0MD. The lower byte of the capture/compare module is compared to the PCA counter low byte; on a match, CEXn is toggled and the offset held in the high byte is added to the matched value in PCA0CPLn. Frequency Output Mode is enabled by setting the ECOMn, TOGn, and PWMn bits in the PCA0CPMn register. Note that the MATn bit should normally be set to 0 in this mode. If the MATn bit is set to 1, the CCFn flag for the channel will be set when the 16-bit PCA0 counter and the 16-bit capture/compare register for the channel are equal.

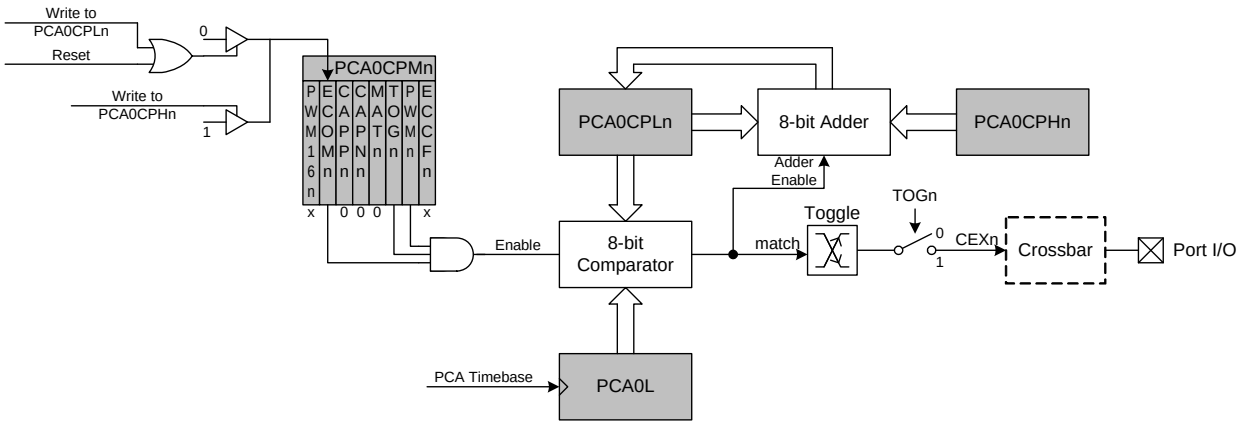

Figure 26.7. PCA Frequency Output Mode

26.3.5. 8-Bit, 9-Bit, 10-Bit and 11-Bit Pulse Width Modulator Modes

Each module can be used independently to generate a pulse width modulated (PWM) output on its associated CEXn pin. The frequency of the output is dependent on the timebase for the PCA counter/timer, and the setting of the PWM cycle length (8, 9, 10 or 11-bits). For backwards-compatibility with the 8-bit PWM mode available on other devices, the 8-bit PWM mode operates slightly different than 9, 10 and 11-bit PWM modes. **It is important to note that all channels configured for 8/9/10/11-bit PWM mode will use the same cycle length.** It is not possible to configure one channel for 8-bit PWM mode and another for 11-bit mode (for example). However, other PCA channels can be configured to Pin Capture, High-Speed Output, Software Timer, Frequency Output, or 16-bit PWM mode independently.

26.3.5.1. 8-Bit Pulse Width Modulator Mode

The duty cycle of the PWM output signal in 8-bit PWM mode is varied using the module's PCA0CPLn capture/compare register. When the value in the low byte of the PCA counter/timer (PCA0L) is equal to the value in PCA0CPLn, the output on the CEXn pin will be set. When the count value in PCA0L overflows, the CEXn output will be reset (see Figure 26.8). Also, when the counter/timer low byte (PCA0L) overflows from 0xFF to 0x00, PCA0CPLn is reloaded automatically with the value stored in the module's capture/compare high byte (PCA0CPHn) without software intervention. Setting the ECOMn and PWMn bits in the PCA0CPMn register, and setting the CLSEL bits in register PCA0PWM to 00b enables 8-Bit Pulse Width Modulator mode. If the MATn bit is set to 1, the CCFn flag for the module will be set each time an 8-bit comparator match (rising edge) occurs. The COVF flag in PCA0PWM can be used to detect the overflow (falling edge), which will occur every 256 PCA clock cycles. The duty cycle for 8-Bit PWM Mode is given in Equation 26.2.

Important Note About Capture/Compare Registers: When writing a 16-bit value to the PCA0 Capture/Compare registers, the low byte should always be written first. Writing to PCA0CPLn clears the ECOMn bit to 0; writing to PCA0CPHn sets ECOMn to 1.

$$\text{Duty Cycle} = \frac{(256 - PCA0CPHn)}{256}$$

Equation 26.2. 8-Bit PWM Duty Cycle

Using Equation 26.2, the largest duty cycle is 100% (PCA0CPHn = 0), and the smallest duty cycle is 0.39% (PCA0CPHn = 0xFF). A 0% duty cycle may be generated by clearing the ECOMn bit to 0.

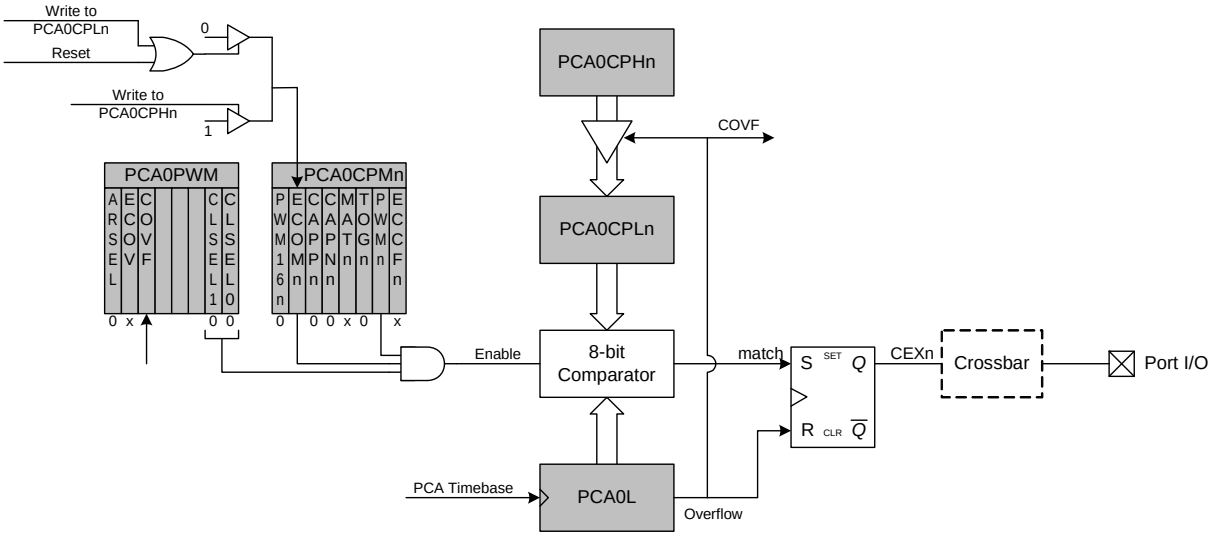

Figure 26.8. PCA 8-Bit PWM Mode Diagram

26.3.5.2. 9/10/11-bit Pulse Width Modulator Mode

The duty cycle of the PWM output signal in 9/10/11-bit PWM mode should be varied by writing to an “Auto-Reload” Register, which is dual-mapped into the PCA0CPHn and PCA0CPLn register locations. The data written to define the duty cycle should be right-justified in the registers. The auto-reload registers are accessed (read or written) when the bit ARSEL in PCA0PWM is set to 1. The capture/compare registers are accessed when ARSEL is set to 0.

When the least-significant N bits of the PCA0 counter match the value in the associated module’s capture/compare register (PCA0CPn), the output on CEXn is asserted high. When the counter overflows from the Nth bit, CEXn is asserted low (see Figure 26.9). Upon an overflow from the Nth bit, the COVF flag is set, and the value stored in the module’s auto-reload register is loaded into the capture/compare register. The value of N is determined by the CLSEL bits in register PCA0PWM.

The 9, 10 or 11-bit PWM mode is selected by setting the ECOMn and PWMn bits in the PCA0CPMn register, and setting the CLSEL bits in register PCA0PWM to the desired cycle length (other than 8-bits). If the MATn bit is set to 1, the CCFn flag for the module will be set each time a comparator match (rising edge) occurs. The COVF flag in PCA0PWM can be used to detect the overflow (falling edge), which will occur every 512 (9-bit), 1024 (10-bit) or 2048 (11-bit) PCA clock cycles. The duty cycle for 9/10/11-Bit PWM Mode is given in Equation 26.2, where N is the number of bits in the PWM cycle.

Important Note About PCA0CPHn and PCA0CPLn Registers: When writing a 16-bit value to the PCA0CPn registers, the low byte should always be written first. Writing to PCA0CPLn clears the ECOMn bit to 0; writing to PCA0CPHn sets ECOMn to 1.

$$\text{Duty Cycle} = \frac{(2^N - PCA0CPn)}{2^N}$$

Equation 26.3. 9, 10, and 11-Bit PWM Duty Cycle

A 0% duty cycle may be generated by clearing the ECOMn bit to 0.

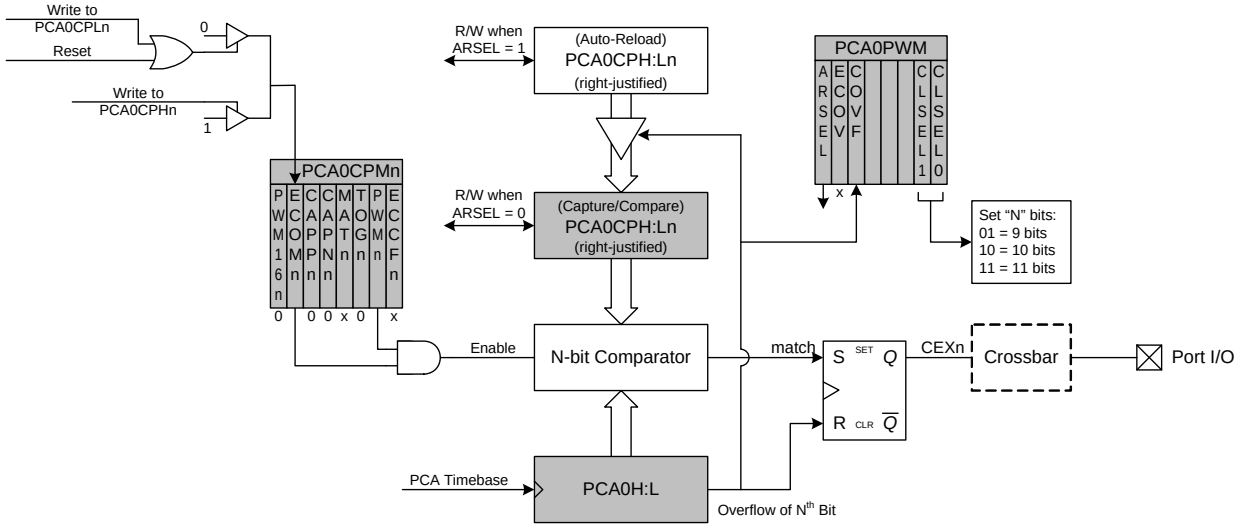

Figure 26.9. PCA 9, 10 and 11-Bit PWM Mode Diagram

26.3.6. 16-Bit Pulse Width Modulator Mode

A PCA module may also be operated in 16-Bit PWM mode. 16-bit PWM mode is independent of the other (8/9/10/11-bit) PWM modes. In this mode, the 16-bit capture/compare module defines the number of PCA clocks for the low time of the PWM signal. When the PCA counter matches the module contents, the output on CEXn is asserted high; when the 16-bit counter overflows, CEXn is asserted low. To output a varying duty cycle, new value writes should be synchronized with PCA CCFn match interrupts. 16-Bit PWM Mode is enabled by setting the ECOMn, PWMn, and PWM16n bits in the PCA0CPMn register. For a varying duty cycle, match interrupts should be enabled (ECCFn = 1 AND MATn = 1) to help synchronize the capture/compare register writes. If the MATn bit is set to 1, the CCFn flag for the module will be set each time a 16-bit comparator match (rising edge) occurs. The CF flag in PCA0CN can be used to detect the overflow (falling edge). The duty cycle for 16-Bit PWM Mode is given by Equation 26.4.

Important Note About Capture/Compare Registers: When writing a 16-bit value to the PCA0 Capture/Compare registers, the low byte should always be written first. Writing to PCA0CPLn clears the ECOMn bit to 0; writing to PCA0CPHn sets ECOMn to 1.

$$\text{Duty Cycle} = \frac{(65536 - PCA0CPn)}{65536}$$

Equation 26.4. 16-Bit PWM Duty Cycle

Using Equation 26.4, the largest duty cycle is 100% (PCA0CPn = 0), and the smallest duty cycle is 0.0015% (PCA0CPn = 0xFFFF). A 0% duty cycle may be generated by clearing the ECOMn bit to 0.

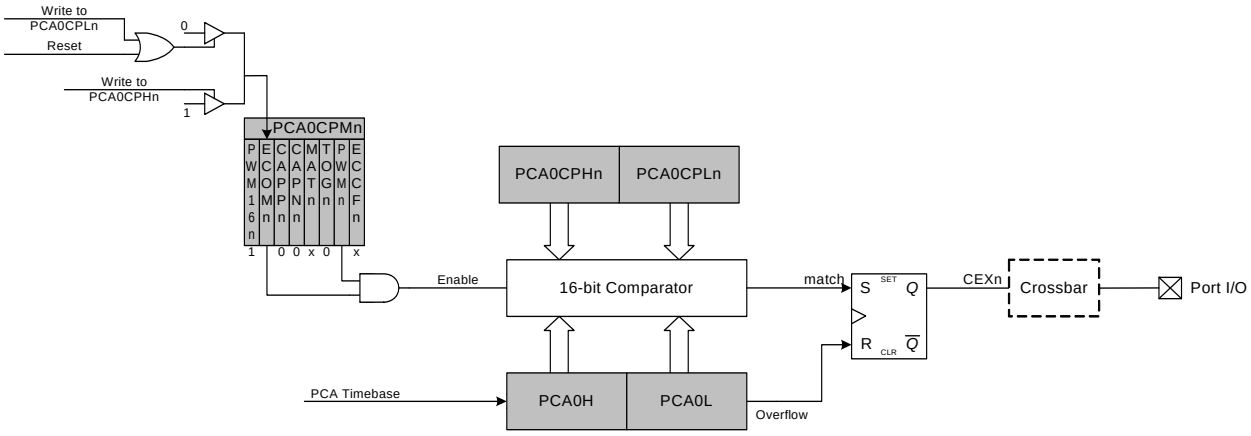

Figure 26.10. PCA 16-Bit PWM Mode

26.4. Watchdog Timer Mode

A programmable watchdog timer (WDT) function is available through the PCA Module 5. The WDT is used to generate a reset if the time between writes to the WDT update register (PCA0CPH2) exceed a specified limit. The WDT can be configured and enabled/disabled as needed by software.

With the WDTE bit set in the PCA0MD register, Module 5 operates as a watchdog timer (WDT). The Module 5 high byte is compared to the PCA counter high byte; the Module 5 low byte holds the offset to be used when WDT updates are performed. **The Watchdog Timer is enabled on reset. Writes to some PCA registers are restricted while the Watchdog Timer is enabled.** The WDT will generate a reset shortly after code begins execution. To avoid this reset, the WDT should be explicitly disabled (and optionally re-configured and re-enabled if it is used in the system).

26.4.1. Watchdog Timer Operation

While the WDT is enabled:

- PCA counter is forced on.
- Writes to PCA0L and PCA0H are not allowed.
- PCA clock source bits (CPS2–CPS0) are frozen.
- PCA Idle control bit (CIDL) is frozen.
- Module 5 is forced into software timer mode.
- Writes to the Module 5 mode register (PCA0CPM5) are disabled.

While the WDT is enabled, writes to the CR bit will not change the PCA counter state; the counter will run until the WDT is disabled. The PCA counter run control bit (CR) will read zero if the WDT is enabled but user software has not enabled the PCA counter. If a match occurs between PCA0CPH5 and PCA0H while the WDT is enabled, a reset will be generated. To prevent a WDT reset, the WDT may be updated with a write of any value to PCA0CPH5. Upon a PCA0CPH5 write, PCA0H plus the offset held in PCA0CPL5 is loaded into PCA0CPH5 (See Figure 26.11).

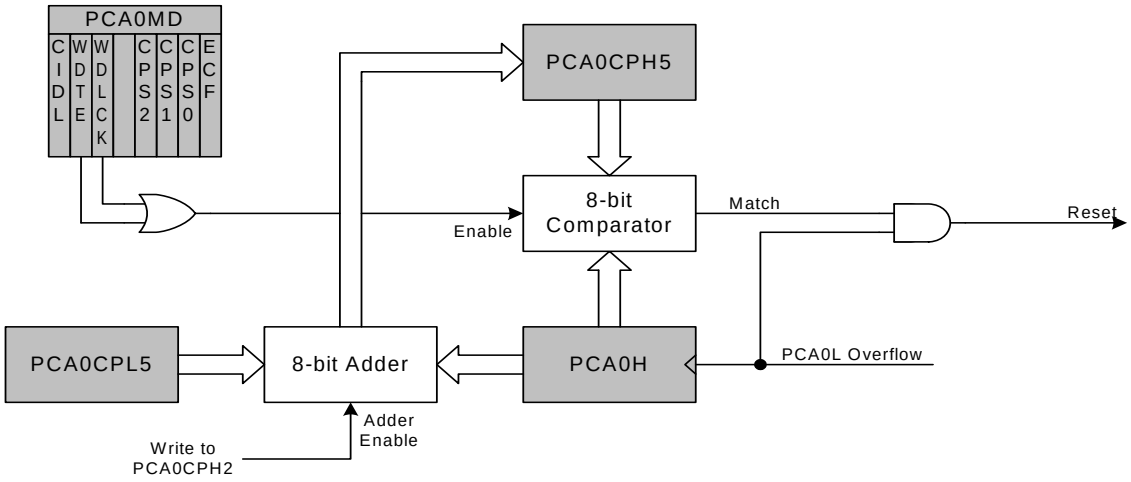

Figure 26.11. PCA Module 5 with Watchdog Timer Enabled

The 8-bit offset held in PCA0CPH5 is compared to the upper byte of the 16-bit PCA counter. This offset value is the number of PCA0L overflows before a reset. Up to 256 PCA clocks may pass before the first PCA0L overflow occurs, depending on the value of the PCA0L when the update is performed. The total offset is then given (in PCA clocks) by Equation 26.5, where PCA0L is the value of the PCA0L register at the time of the update.

$$Offset = (256 \times PCA0CPL5) + (256 - PCA0L)$$

Equation 26.5. Watchdog Timer Offset in PCA Clocks

The WDT reset is generated when PCA0L overflows while there is a match between PCA0CPH5 and PCA0H. Software may force a WDT reset by writing a 1 to the CCF5 flag (PCA0CN.5) while the WDT is enabled.

26.4.2. Watchdog Timer Usage

To configure the WDT, perform the following tasks:

- Disable the WDT by writing a 0 to the WDTE bit.
- Select the desired PCA clock source (with the CPS2–CPS0 bits).
- Load PCA0CPL5 with the desired WDT update offset value.
- Configure the PCA Idle mode (set CIDL if the WDT should be suspended while the CPU is in Idle mode).
- Enable the WDT by setting the WDTE bit to 1.
- Reset the WDT timer by writing to PCA0CPH5.

The PCA clock source and Idle mode select cannot be changed while the WDT is enabled. The watchdog timer is enabled by setting the WDTE or WDLCK bits in the PCA0MD register. When WDLCK is set, the WDT cannot be disabled until the next system reset. If WDLCK is not set, the WDT is disabled by clearing the WDTE bit.

The WDT is enabled following any reset. The PCA0 counter clock defaults to the system clock divided by 12, PCA0L defaults to 0x00, and PCA0CPL5 defaults to 0x00. Using Equation 26.5, this results in a WDT timeout interval of 256 PCA clock cycles, or 3072 system clock cycles. Table 26.3 lists some example timeout intervals for typical system clocks.

Table 26.3. Watchdog Timer Timeout Intervals[1]

System Clock (Hz)	PCA0CPL5	Timeout Interval (ms)
24,500,000	255	32.1
24,500,000	128	16.2
24,500,000	32	4.1
3,062,500[2]	255	257
3,062,500[2]	128	129.5
3,062,500[2]	32	33.1
32,000	255	24576
32,000	128	12384
32,000	32	3168

Notes:
1. Assumes SYSCLK/12 as the PCA clock source, and a PCA0L value of 0x00 at the update time.
2. Internal SYSCLK reset frequency = Internal Oscillator divided by 8.

26.5. Register Descriptions for PCA0

Following are detailed descriptions of the special function registers related to the operation of the PCA.

SFR Definition 26.1. PCA0CN: PCA Control

Bit	7	6	5	4	3	2	1	0
Name	CF	CR	CCF5	CCF4	CCF3	CCF2	CCF1	CCF0
Type	R/W	R/W	R/W	R/W	R/W	R/W	R/W	R/W
Reset	0	0	0	0	0	0	0	0

SFR Page = 0x0; SFR Address = 0xD8; Bit-Addressable

Bit	Name	Function
7	CF	**PCA Counter/Timer Overflow Flag.** Set by hardware when the PCA Counter/Timer overflows from 0xFFFF to 0x0000. When the Counter/Timer Overflow (CF) interrupt is enabled, setting this bit causes the CPU to vector to the PCA interrupt service routine. This bit is not automatically cleared by hardware and must be cleared by software.
6	CR	**PCA Counter/Timer Run Control.** This bit enables/disables the PCA Counter/Timer. 0: PCA Counter/Timer disabled. 1: PCA Counter/Timer enabled.
5:0	CCF[5:0]	**PCA Module n Capture/Compare Flag.** These bits are set by hardware when a match or capture occurs in the associated PCA Module n. When the CCFn interrupt is enabled, setting this bit causes the CPU to vector to the PCA interrupt service routine. This bit is not automatically cleared by hardware and must be cleared by software.

SFR Definition 26.2. PCA0MD: PCA Mode

Bit	7	6	5	4	3	2	1	0
Name	CIDL	WDTE	WDLCK		CPS2	CPS1	CPS0	ECF
Type	R/W	R/W	R/W	R	R/W	R/W	R/W	R/W
Reset	0	1	0	0	0	0	0	0

SFR Page = 0x0; SFR Address = 0xD9

Bit	Name	Function
7	CIDL	**PCA Counter/Timer Idle Control.** Specifies PCA behavior when CPU is in Idle Mode. 0: PCA continues to function normally while the system controller is in Idle Mode. 1: PCA operation is suspended while the system controller is in Idle Mode.
6	WDTE	**Watchdog Timer Enable.** If this bit is set, PCA Module 2 is used as the watchdog timer. 0: Watchdog Timer disabled. 1: PCA Module 2 enabled as Watchdog Timer.
5	WDLCK	**Watchdog Timer Lock.** This bit locks/unlocks the Watchdog Timer Enable. When WDLCK is set, the Watchdog Timer may not be disabled until the next system reset. 0: Watchdog Timer Enable unlocked. 1: Watchdog Timer Enable locked.
4	Unused	Read = 0b, Write = don't care.
3:1	CPS[2:0]	**PCA Counter/Timer Pulse Select.** These bits select the timebase source for the PCA counter 000: System clock divided by 12 001: System clock divided by 4 010: Timer 0 overflow 011: High-to-low transitions on ECI (max rate = system clock divided by 4) 100: System clock 101: External clock divided by 8 (synchronized with the system clock) **110: SmaRTClock divided by 8** (synchronized with the system clock and only available on ‘F912 and ‘F902 devices -- this setting is reserved on all other devices) 111: Reserved
0	ECF	**PCA Counter/Timer Overflow Interrupt Enable.** This bit sets the masking of the PCA Counter/Timer Overflow (CF) interrupt. 0: Disable the CF interrupt. 1: Enable a PCA Counter/Timer Overflow interrupt request when CF (PCA0CN.7) is set.
Note: When the WDTE bit is set to 1, the other bits in the PCA0MD register cannot be modified. To change the contents of the PCA0MD register, the Watchdog Timer must first be disabled.		

SFR Definition 26.3. PCA0PWM: PCA PWM Configuration

Bit	7	6	5	4	3	2	1	0
Name	ARSEL	ECOV	COVF				CLSEL[1:0]	
Type	R/W	R/W	R/W	R	R	R	R/W	
Reset	0	0	0	0	0	0	0	0

SFR Page = 0x0; SFR Address = 0xDF

Bit	Name	Function
7	ARSEL	**Auto-Reload Register Select.** This bit selects whether to read and write the normal PCA capture/compare registers (PCA0CPn), or the Auto-Reload registers at the same SFR addresses. This function is used to define the reload value for 9, 10, and 11-bit PWM modes. In all other modes, the Auto-Reload registers have no function. 0: Read/Write Capture/Compare Registers at PCA0CPHn and PCA0CPLn. 1: Read/Write Auto-Reload Registers at PCA0CPHn and PCA0CPLn.
6	ECOV	**Cycle Overflow Interrupt Enable.** This bit sets the masking of the Cycle Overflow Flag (COVF) interrupt. 0: COVF will not generate PCA interrupts. 1: A PCA interrupt will be generated when COVF is set.
5	COVF	**Cycle Overflow Flag.** This bit indicates an overflow of the 8th, 9th, 10th, or 11th bit of the main PCA counter (PCA0). The specific bit used for this flag depends on the setting of the Cycle Length Select bits. The bit can be set by hardware or software, but must be cleared by software. 0: No overflow has occurred since the last time this bit was cleared. 1: An overflow has occurred since the last time this bit was cleared.
4:2	Unused	**Unused.** Read = 000b; Write = don’t care.
1:0	CLSEL[1:0]	**Cycle Length Select.** When 16-bit PWM mode is not selected, these bits select the length of the PWM cycle, between 8, 9, 10, or 11 bits. This affects all channels configured for PWM which are not using 16-bit PWM mode. These bits are ignored for individual channels configured to16-bit PWM mode. 00: 8 bits. 01: 9 bits. 10: 10 bits. 11: 11 bits.

SFR Definition 26.4. PCA0CPMn: PCA Capture/Compare Mode

Bit	7	6	5	4	3	2	1	0
Name	PWM16n	ECOMn	CAPPn	CAPNn	MATn	TOGn	PWMn	ECCFn
Type	R/W	R/W	R/W	R/W	R/W	R/W	R/W	R/W
Reset	0	0	0	0	0	0	0	0

SFR Address, Page: PCA0CPM0 = 0xDA, 0x0; PCA0CPM1 = 0xDB, 0x0; PCA0CPM2 = 0xDC, 0x0
PCA0CPM3 = 0xDD, 0x0; PCA0CPM4 = 0xDE, 0x0; PCA0CPM5 = 0xCE, 0x0

Bit	Name	Function
7	PWM16n	**16-bit Pulse Width Modulation Enable.** This bit enables 16-bit mode when Pulse Width Modulation mode is enabled. 0: 8 to 11-bit PWM selected. 1: 16-bit PWM selected.
6	ECOMn	**Comparator Function Enable.** This bit enables the comparator function for PCA module n when set to 1.
5	CAPPn	**Capture Positive Function Enable.** This bit enables the positive edge capture for PCA module n when set to 1.
4	CAPNn	**Capture Negative Function Enable.** This bit enables the negative edge capture for PCA module n when set to 1.
3	MATn	**Match Function Enable.** This bit enables the match function for PCA module n when set to 1. When enabled, matches of the PCA counter with a module's capture/compare register cause the CCFn bit in PCA0MD register to be set to logic 1.
2	TOGn	**Toggle Function Enable.** This bit enables the toggle function for PCA module n when set to 1. When enabled, matches of the PCA counter with a module's capture/compare register cause the logic level on the CEXn pin to toggle. If the PWMn bit is also set to logic 1, the module operates in Frequency Output Mode.
1	PWMn	**Pulse Width Modulation Mode Enable.** This bit enables the PWM function for PCA module n when set to 1. When enabled, a pulse width modulated signal is output on the CEXn pin. 8 to 11-bit PWM is used if PWM16n is cleared; 16-bit mode is used if PWM16n is set to logic 1. If the TOGn bit is also set, the module operates in Frequency Output Mode.
0	ECCFn	**Capture/Compare Flag Interrupt Enable.** This bit sets the masking of the Capture/Compare Flag (CCFn) interrupt. 0: Disable CCFn interrupts. 1: Enable a Capture/Compare Flag interrupt request when CCFn is set.
Note: When the WDTE bit is set to 1, the PCA0CPM5 register cannot be modified, and module 5 acts as the watchdog timer. To change the contents of the PCA0CPM5 register or the function of module 5, the Watchdog Timer must be disabled.		

SFR Definition 26.5. PCA0L: PCA Counter/Timer Low Byte

Bit	7	6	5	4	3	2	1	0
Name	PCA0[7:0]							
Type	R/W	R/W	R/W	R/W	R/W	R/W	R/W	R/W
Reset	0	0	0	0	0	0	0	0

SFR Page = 0x0; SFR Address = 0xF9

Bit	Name	Function
7:0	PCA0[7:0]	**PCA Counter/Timer Low Byte.** The PCA0L register holds the low byte (LSB) of the 16-bit PCA Counter/Timer.
Note: When the WDTE bit is set to 1, the PCA0L register cannot be modified by software. To change the contents of the PCA0L register, the Watchdog Timer must first be disabled.		

SFR Definition 26.6. PCA0H: PCA Counter/Timer High Byte

Bit	7	6	5	4	3	2	1	0
Name	PCA0[15:8]							
Type	R/W	R/W	R/W	R/W	R/W	R/W	R/W	R/W
Reset	0	0	0	0	0	0	0	0

SFR Page = 0x0; SFR Address = 0xFA

Bit	Name	Function
7:0	PCA0[15:8]	**PCA Counter/Timer High Byte.** The PCA0H register holds the high byte (MSB) of the 16-bit PCA Counter/Timer. Reads of this register will read the contents of a “snapshot” register, whose contents are updated only when the contents of PCA0L are read (see Section 26.1).
Note: When the WDTE bit is set to 1, the PCA0H register cannot be modified by software. To change the contents of the PCA0H register, the Watchdog Timer must first be disabled.		

SFR Definition 26.7. PCA0CPLn: PCA Capture Module Low Byte

Bit	7	6	5	4	3	2	1	0
Name	PCA0CPn[7:0]							
Type	R/W	R/W	R/W	R/W	R/W	R/W	R/W	R/W
Reset	0	0	0	0	0	0	0	0

SFR Addresses: PCA0CPL0 = 0xFB, PCA0CPL1 = 0xE9, PCA0CPL2 = 0xEB,
PCA0CPL3 = 0xED, PCA0CPL4 = 0xFD, PCA0CPL5 = 0xD2

SFR Pages: PCA0CPL0 = 0x0, PCA0CPL1 = 0x0, PCA0CPL2 = 0x0,
PCA0CPL3 = 0x0, PCA0CPL4 = 0x0, PCA0CPL5 = 0x0

Bit	Name	Function
7:0	PCA0CPn[7:0]	**PCA Capture Module Low Byte.** The PCA0CPLn register holds the low byte (LSB) of the 16-bit capture module n. This register address also allows access to the low byte of the corresponding PCA channel's auto-reload value for 9, 10, or 11-bit PWM mode. The ARSEL bit in register PCA0PWM controls which register is accessed.
Note: A write to this register will clear the module's ECOMn bit to a 0.		

SFR Definition 26.8. PCA0CPHn: PCA Capture Module High Byte

Bit	7	6	5	4	3	2	1	0
Name	PCA0CPn[15:8]							
Type	R/W	R/W	R/W	R/W	R/W	R/W	R/W	R/W
Reset	0	0	0	0	0	0	0	0

SFR Addresses: PCA0CPH0 = 0xFC, PCA0CPH1 = 0xEA, PCA0CPH2 = 0xEC,
PCA0CPH3 = 0xEE, PCA0CPH4 = 0xFE, PCA0CPH5 = 0xD3

SFR Pages: PCA0CPH0 = 0x0, PCA0CPH1 = 0x0, PCA0CPH2 = 0x0,
PCA0CPH3 = 0x0, PCA0CPH4 = 0x0, PCA0CPH5 = 0x0

Bit	Name	Function
7:0	PCA0CPn[15:8]	**PCA Capture Module High Byte.** The PCA0CPHn register holds the high byte (MSB) of the 16-bit capture module n. This register address also allows access to the high byte of the corresponding PCA channel's auto-reload value for 9, 10, or 11-bit PWM mode. The ARSEL bit in register PCA0PWM controls which register is accessed.
Note: A write to this register will set the module's ECOMn bit to a 1.		

27. C2 Interface

C8051F91x-C8051F90x devices include an on-chip Silicon Labs 2-Wire (C2) debug interface to allow Flash programming and in-system debugging with the production part installed in the end application. The C2 interface uses a clock signal (C2CK) and a bi-directional C2 data signal (C2D) to transfer information between the device and a host system. See the C2 Interface Specification for details on the C2 protocol.

27.1. C2 Interface Registers

The following describes the C2 registers necessary to perform Flash programming through the C2 interface. All C2 registers are accessed through the C2 interface as described in the C2 Interface Specification.

C2 Register Definition 27.1. C2ADD: C2 Address

Bit	7	6	5	4	3	2	1	0
Name	C2ADD[7:0]							
Type	R/W							
Reset	0	0	0	0	0	0	0	0

Bit	Name	Function	
7:0	C2ADD[7:0]	**C2 Address.** The C2ADD register is accessed via the C2 interface to select the target Data register for C2 Data Read and Data Write commands.	
		Address	**Description**
		0x00	Selects the Device ID register for Data Read instructions
		0x01	Selects the Revision ID register for Data Read instructions
		0x02	Selects the C2 Flash Programming Control register for Data Read/Write instructions
		0xB4	Selects the C2 Flash Programming Data register for Data Read/Write instructions

C2 Register Definition 27.2. DEVICEID: C2 Device ID

Bit	7	6	5	4	3	2	1	0
Name	DEVICEID[7:0]							
Type	R/W							
Reset	0	0	0	1	0	1	0	0

C2 Address: 0x00

Bit	Name	Function
7:0	DEVICEID[7:0]	**Device ID.** This read-only register returns the 8-bit device ID: 0x1F.

C2 Register Definition 27.3. REVID: C2 Revision ID

Bit	7	6	5	4	3	2	1	0
Name	REVID[7:0]							
Type	R/W							
Reset	Varies	Varies	Varies	Varies	Varies	Varies	Varies	Varies

C2 Address: 0x01

Bit	Name	Function
7:0	REVID[7:0]	**Revision ID.** This read-only register returns the 8-bit revision ID. For example: 0x00 = Revision A.

C2 Register Definition 27.4. FPCTL: C2 Flash Programming Control

Bit	7	6	5	4	3	2	1	0
Name	FPCTL[7:0]							
Type	R/W							
Reset	0	0	0	0	0	0	0	0

C2 Address: 0x02

Bit	Name	Function
7:0	FPCTL[7:0]	**Flash Programming Control Register.** This register is used to enable Flash programming via the C2 interface. To enable C2 Flash programming, the following codes must be written in order: 0x02, 0x01. Note that once C2 Flash programming is enabled, a system reset must be issued to resume normal operation.

C2 Register Definition 27.5. FPDAT: C2 Flash Programming Data

Bit	7	6	5	4	3	2	1	0
Name	FPDAT[7:0]							
Type	R/W							
Reset	0	0	0	0	0	0	0	0

C2 Address: 0xB4

Bit	Name	Function	
7:0	FPDAT[7:0]	**C2 Flash Programming Data Register.** This register is used to pass Flash commands, addresses, and data during C2 Flash accesses. Valid commands are listed below.	
		Code	**Command**
		0x06	Flash Block Read
		0x07	Flash Block Write
		0x08	Flash Page Erase
		0x03	Device Erase

27.2. C2 Pin Sharing

The C2 protocol allows the C2 pins to be shared with user functions so that in-system debugging and Flash programming may be performed. This is possible because C2 communication is typically performed when the device is in the halt state, where all on-chip peripherals and user software are stalled. In this halted state, the C2 interface can safely “borrow” the C2CK ($\overline{RST}$) and C2D pins. In most applications, external resistors are required to isolate C2 interface traffic from the user application. A typical isolation configuration is shown in Figure 27.1.

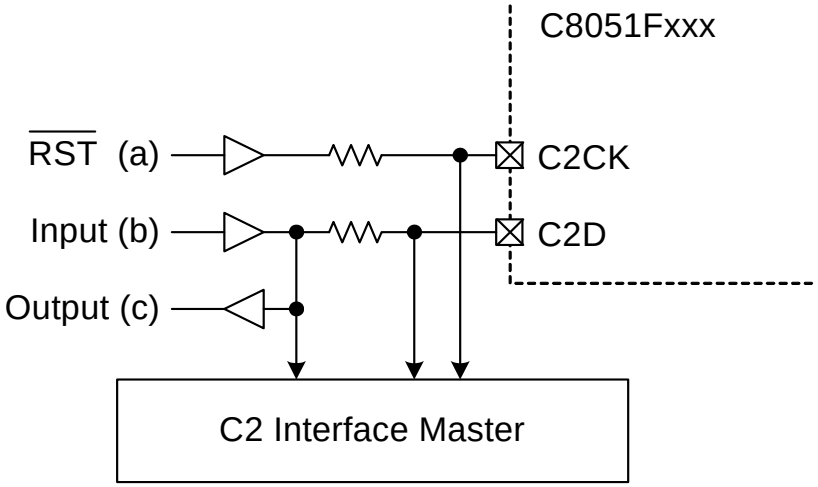

Figure 27.1. Typical C2 Pin Sharing

The configuration in Figure 27.1 assumes the following:

1. The user input (b) cannot change state while the target device is halted.
2. The $\overline{RST}$ pin on the target device is used as an input only.

Additional resistors may be necessary depending on the specific application.

CONTACT INFORMATION

Silicon Laboratories Inc.

400 West Cesar Chavez
Austin, TX 78701

Please visit the Silicon Labs Technical Support web page:
https://www.silabs.com/support/pages/contacttechnicalsupport.aspx
and register to submit a technical support request.

The information in this document is believed to be accurate in all respects at the time of publication but is subject to change without notice. Silicon Laboratories assumes no responsibility for errors and omissions, and disclaims responsibility for any consequences resulting from the use of information included herein. Additionally, Silicon Laboratories assumes no responsibility for the functioning of undescribed features or parameters. Silicon Laboratories reserves the right to make changes without further notice. Silicon Laboratories makes no warranty, representation or guarantee regarding the suitability of its products for any particular purpose, nor does Silicon Laboratories assume any liability arising out of the application or use of any product or circuit, and specifically disclaims any and all liability, including without limitation consequential or incidental damages. Silicon Laboratories products are not designed, intended, or authorized for use in applications intended to support or sustain life, or for any other application in which the failure of the Silicon Laboratories product could create a situation where personal injury or death may occur. Should Buyer purchase or use Silicon Laboratories products for any such unintended or unauthorized application, Buyer shall indemnify and hold Silicon Laboratories harmless against all claims and damages.

Silicon Laboratories and Silicon Labs are trademarks of Silicon Laboratories Inc.

Other products or brandnames mentioned herein are trademarks or registered trademarks of their respective holders