PHAS0050 : Climate & Energy
Module 2 : Renewables and Storage

Prof. T. Jones, Prof. D. Waters, Prof. C. Ghag & Prof. C. Howard

Department of Physics & Astronomy, UCL

Contents

1 Wind, Hydro, Tidal , Wave and Solar Power **2**
1.1 Wind Power 2
1.2 Hydro Power 7
1.3 Wave and Tidal Power 8
1.4 Solar Power 20

2 Compressed Air Energy Storage (CAES) **21**

3 Reducing power demand **22**
3.1 Space Heating 22
3.2 Power from non recyclable waste 23

4 Matching carbon neutral power to demand **24**

1 Wind, Hydro, Tidal , Wave and Solar Power

Wind, hydro, tidal, wave and solar power are certainly fossil free and sustainable power sources with which the UK is well endowed (hydro and solar excepted) and which the UK government is encouraging with substantial subsidies.

1.1 Wind Power

The Betz Limit

For the extraction of power from the wind a stream tube of wind is considered to pass through an 'actuator disc' formed by the rotating turbine blades in the steady state such that the air pressure drops across this disc, and a thrust T is exerted on the disc and power may be extracted. The 'actuator disc' in the steady state is formed by the aerodynamics of the airflow over the turbine blades which are to be considered as aerofoils. Consider a stream tube of air that moves with speed u_1 through a wind turbine of cross section

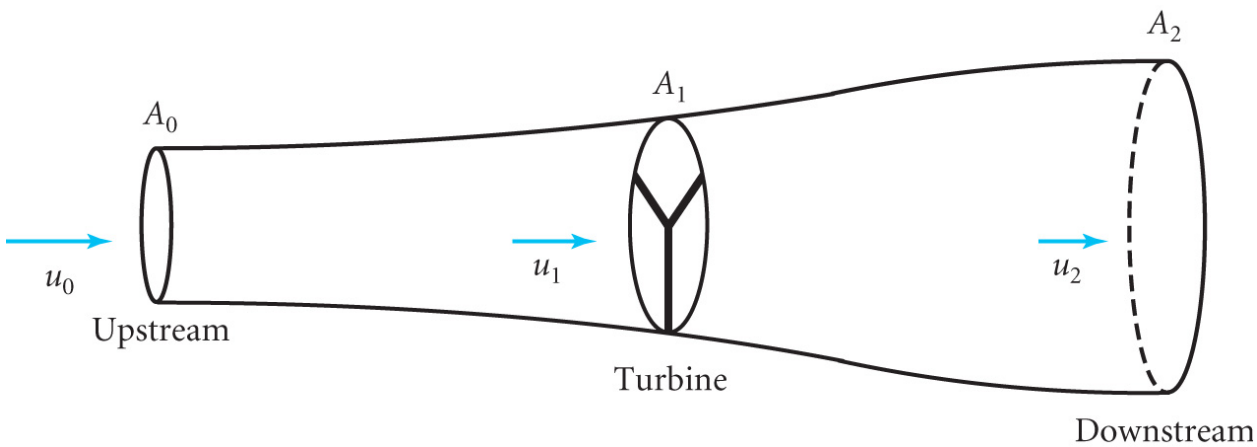

Figure 1: Wind flow through a turbine

A_1. Upstream the speed of the stream is u_0 and downstream it is u_2. If $\frac{dm}{dt}$ is the mass of air through the wind turbine per second then the momentum flow rate through A_0 is $\frac{dm}{dt}u_0$ and that through A_2 is $\frac{dm}{dt}u_2$. At the disc the rate of change of momentum is $\frac{dm}{dt}(u_0 - u_2)$ and the thrust (force) T exerted on the turbine is given by :

$$T = \frac{dm}{dt}(u_0 - u_2) \text{ so that } P = Tu_1 = \frac{dm}{dt}(u_0 - u_2)u_1 \ ,$$

where $P = (\frac{d}{dt}Fdx = F\frac{dx}{dt}) = Tu_1$ is the power resulting from the thrust T of the wind with speed u_1 transferring power to the wind turbine. Now this must equal the rate of loss of KE of the wind, given by :

$$\frac{1}{2}\frac{dm}{dt}(u_0^2 - u_2^2)$$

Thus $u_1 = \frac{1}{2}(u_0 + u_2)$ and using $\frac{dm}{dt} = \rho u_1 A_1$ then $P = 2\rho u_1^2 A_1(u_0 - u_1)$. Differentiating with respect to u_1 and setting P equal to zero we find that at the Betz Limit $u_1 = 2/3u_0$, $u_2 = 1/3u_0 = 1/2u_1$ and $P_{max} = \frac{1}{2}\rho u^3 A_1 \frac{16}{27}$. The maximum power output, given by :

$$P_{max} = \frac{1}{2}\rho u_0^3 A_1 \frac{16}{27}$$

is known as the Betz limit and is the maximum power that can be extracted form the stream tube of wind. Further consideration (see below) of the aerodynamics of the wind turbine shows that at most only about two thirds of this limit can be extracted.

As an example consider a wind turbine of blade radius $50\mathrm{m}$ in a wind whose speed u is $5\ \mathrm{m\,s^{-1}}$ and whose density is $1.2\ \mathrm{kg\,m^{-3}}$. The wind power within the blade radius is given by :

$$P_{wind} = \frac{1}{2}\rho u^3 A_1 = \frac{1}{2}1.2 \times 5^3 \times \pi \times (50)^2 = 0.59\ \mathrm{MW}$$

and the maximum power that can be extracted is $0.35\ \mathrm{MW}$.

The mean wind speed onshore in the west of the UK is about $6\ \mathrm{m\,s^{-1}}$ and offshore it is about $9.6\ \mathrm{m\,s^{-1}}$. Currently the largest wind turbines are rated at $7\ \mathrm{MW}$ and have blades up to $80\ \mathrm{m}$ radius. Even larger turbines are being designed since they are not that much more expensive to install offshore given the marine engineering required in a hostile environment.

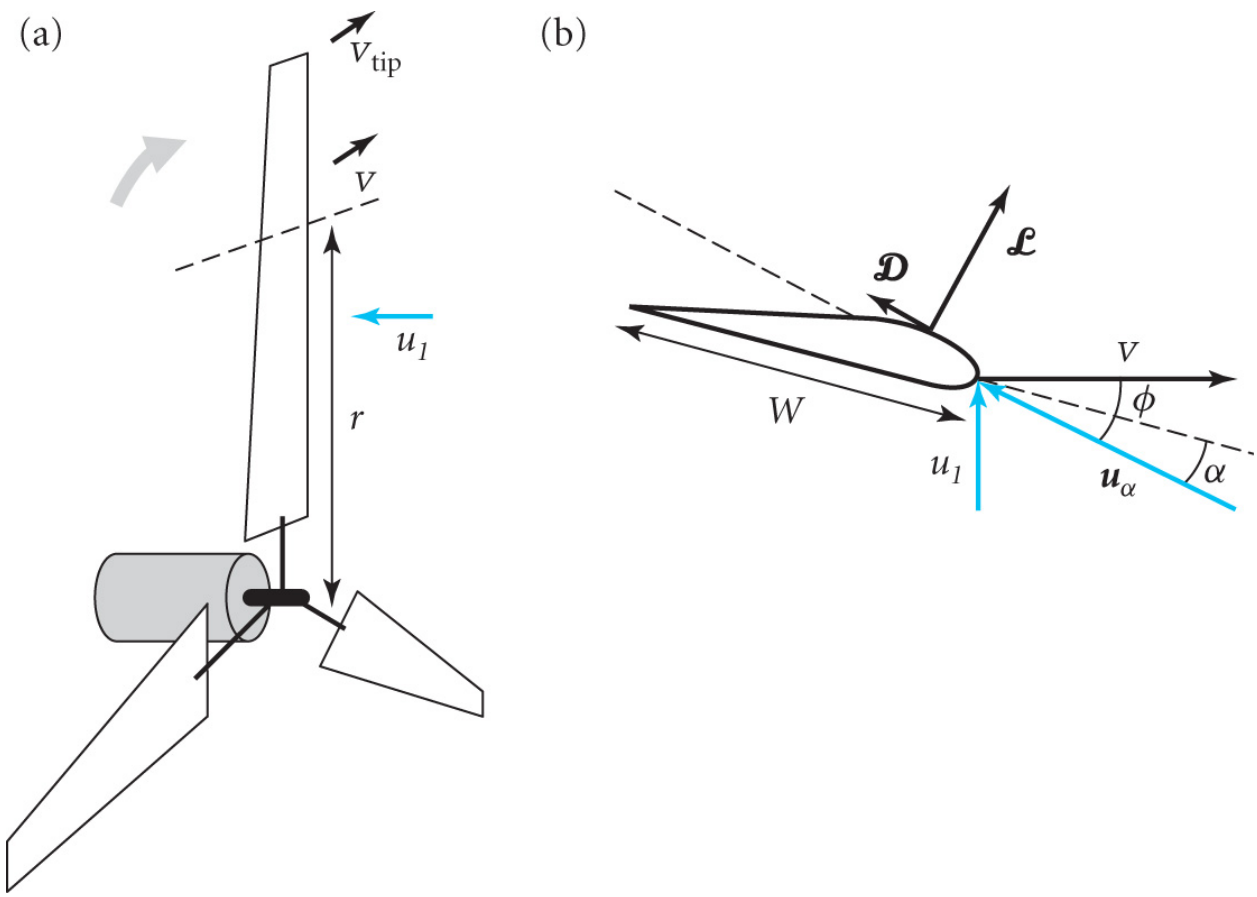

Figure 2: The Wind Turbine and its Aerofoil Section

Blade Design

Starting with the turbine blades at rest the wind with speed u_1 acting at right angles to the 'actuator disc' but at an angle to the blades, the wind reflection off the blades cause the wind turbine to start to rotate. The thrust on the turbine is then generated and translated into rotational energy by the apparent wind flow over the aerofoil sections of the blades. From Figure 1.1 we find that the resultant velocity of the air relative to

the blade $\vec{u}_\alpha$ makes an angle ϕ with respect to the direction of the blade which is moving with velocity $\vec{v}$ perpendicular to the true wind direction. The angle ϕ at the radius r is given by :

$$\tan\phi = \frac{u_1}{v} = \frac{2R}{3r\lambda} \text{ where } \lambda = \frac{v_{tip}}{u_0} \text{ , and where we have used } v = \frac{rv_{tip}}{R}.$$

R is the maximum radius of the turbine and we have satisfied the Betz condition by setting the wind speed u_1 at the turbine to be $2/3$ of u_0 the upstream wind speed. The parameter $\lambda = v_{tip}/u_0$ ie the ratio of the blade speed at the tip v_{tip} to the upstream wind speed u_0 is important in the design of a wind turbine.

The apparent wind direction makes an 'angle of attack' α with respect to the *flat side* of the blade and creates lift L perpendicular to the *air flow* $\vec{u}_\alpha$, the drag D being perpendicular to the lift and hence opposite to the direction of the air flow.

The apparent angle of the wind increases as the radius decreases so the blades are designed with a twist that increases with decreasing radius r, the angle of twist being given by :

$$\text{Angle of twist } = \phi - \alpha = \tan^{-1}\left(\frac{2R}{3r\lambda}\right) - \alpha.$$

The thrust per unit width of the blade, neglecting drag, is given by $L\cos\phi$ and the power P developed by $L\sin\phi v$ (force multiplied by velocity).

Now we need to determine the width W of the blade as a function of r. The total thrust dT on the annular area $dA = 2\pi r dr$ equals the rate of change of momentum $\frac{dm}{dt}(u_0 - u_2)$, where $\frac{dm}{dt}$ is this time the mass per unit time of air going through the annular area and $(u_0 - u_2)$ is the speed change. Using the Betz limit conditions $u_2 = \frac{1}{2}u_1$ and $u_0 = \frac{3}{2}u_1$, we have :

$$dT = \rho u_1 \times u_1 \times 2\pi r dr = \rho u_1^2 2\pi r dr$$

which we now equate to the thrust dT_n of the n turbine blades assuming that this acts over the whole annular region. Now we neglect the drag and quote a result from aerodynamics for the element of lift dL :

$$dL = \frac{1}{2}C_L \rho u_\alpha^2 W dr \ ,$$

where C_L is the lift coefficient, α is the angle of attack, W is the width (or chord) of the blade at r so that $W dr$ is the area of the blade between r and $r + dr$. Since $u_\alpha = u_1/\sin\phi$ and equating the thrust to the components of the lift we find :

$$\rho u_1^2 2\pi r dr = n dL\cos\phi = \frac{1}{2}nC_L\rho u_1^2 W dr \frac{\cos\phi}{\sin^2\phi} \ .$$

Hence to satisfy the Betz condition, the blade width at a distance r from the axis must be given by :

$$W = \frac{4\pi r\tan\phi\sin\phi}{nC_L} = \frac{8\pi R\sin\phi}{3\lambda nC_L}$$

It is interesting to note that the required width decreases the higher the tip speed ratio thereby reducing the amount of material needed in construction.

Effect of the drag force

The drag force acts at right angles to the lift force and has the same algebraic form where the lift coefficient is replaced by the drag coefficient C_D. As a result of the drag, the force causing the rotation of the turbine is reduced from $L\sin\phi$ to :

$$L\sin\phi - D\cos\phi = L\sin\phi(1 - g\cot\phi) \text{ , where} g = \frac{C_D}{C_L}.$$

At r = 2/3 R we have $\cot\phi = \lambda$ and at this radius $P(r) = (1 - g\lambda)P_{Betz}$. So if $\lambda = 10$ and $g = 1/40$ the windturbine power is reduced by 25% from the Betz Limit. A high value of λ reduces the width of the blade and therefore reduces material costs. For a given wind speed a high λ value results in a higher angular speed of the turbine thereby reducing the required gearing and the size of the generator (see below).

Connecting to the Power Grid

Wind turbines rotate with a variable speed typically in the range 40 to 20 revolutions per minute (rpm) or at variable frequencies between 0.66 to 0.33 Hz, whereas the frequency of the AC grid in the UK is 50 Hz which corresponds to a generator rotation frequency of 3000 rpm. The axle of the wind turbine is connected to the generator by a gear box and the generator itself has a multipole pair rotor so that the output frequency of the stator windings is around 50 Hz.

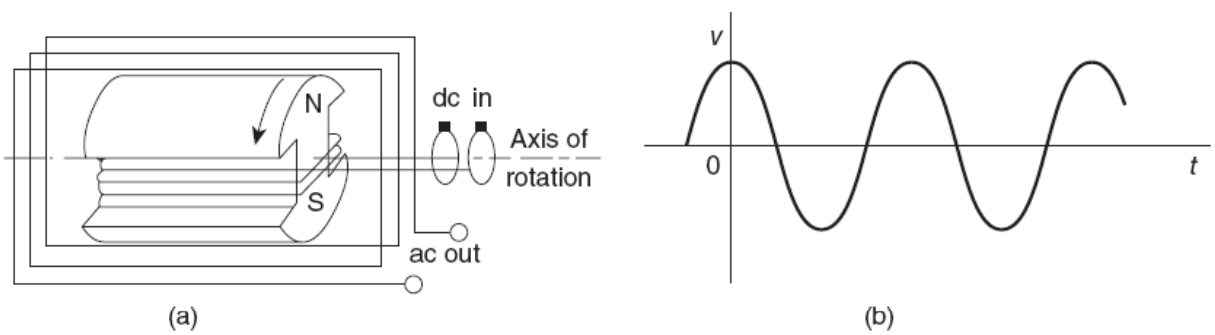

Figure 3: A simple generator

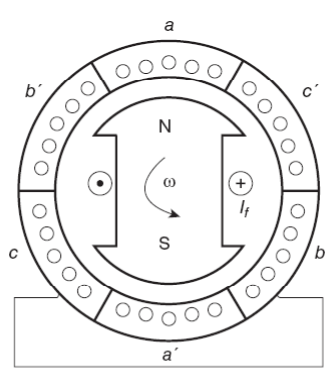

Figure 4: One pole pair rotor and stator windings to produce three phase output

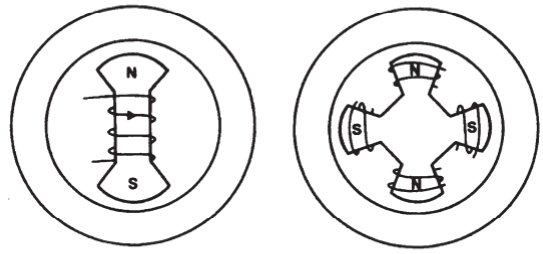

Figure 5: One pole pair and two pole pair rotor windings.

Coils are wound on the stator so as to provide a three phase AC output from the generator which is connected to the local power output of the wind farm. A two pole rotor produces a rotating magnetic field which induces emf in the stator windings at the frequency of rotation of the rotor. If the rotor has n pole pairs then the rotor and stator frequencies are related by $f_r = \frac{f_s}{n}$. Gear boxes, which have caused problems in offshore wind farms because repair is difficult can be avoided by the expensive solution of putting permanent magnet pole pairs made from the rare earths (I have seen as many as 72) on the rotor.

For onshore wind farms and offshore farms within about 70 km from land, AC output from synchronous or induction generators can feed power in phase with the UK grid provided in the offshore case, an AC cable transmits the phase information from the land to the farm. For offshore wind farms at a greater distance than about 70 km from land, HVDC cables have to be used since the reactive currents flowing in the cable capacitance under AC conditions become excessive. Beneath the Celtic sea it is proposed to transfer power from Irish onshore wind farms through a bipolar (to reduce magnetic effects) ± 250 kV HVDC cable whose output is inverted to be in phase with the HVAC 400 kV UK grid. For such a cable the capacitance C' is $0.14\ \mu\mathrm{F\ km^{-1}}$ corresponding to a reactive impedance $Z'_c = 1/(2\pi\ f\ C') = 22,800\ \Omega$ where f is the grid frequency 50 cps. Under AC conditions the reactive current is $11\ \mathrm{A\ km^{-1}}$ at 250 kV.

	CCGT	CCGT CCS	ASCOCCS	EPR	ON Wind	OFF Wind
Cap. Cost ($£/\mathrm{kW_e}$)	808	1370	3000	5000	1500	3000
Am. Cap. Cost ($£/\mathrm{MWh_e}$)	9	21	37	70	70	85
Fuel ($£/\mathrm{MWh_e}$)	49	56	36	5	0	0
Carbon ($£/\mathrm{MWh_e}$)	18	4	5	0	0	0
CO2 Capture/Storage ($£/\mathrm{MWh_e}$)	0	4	5	0	0	0
Decommision/ Waste	0	0	0	2	0	0
O+M	4	10	22	14	30	36
Elec. Gen. Cost ($\mathrm{p/kWh_e}$)	8	9.5	10.5	9	10	12

Table 1: Summary of Fossil Fuel, Nuclear and Wind Power (see notes for details of each)

The UK plans to have installed 33 GW of wind power capacity, one third onshore and two thirds offshore by 2020. On average this might supply $10\ \mathrm{GW_e}$ (the UK electricity consumption being $45\ \mathrm{GW_e}$) given the intermittent nature of the wind - during the last cold winter wind turbines contributed less than 10% of their installed capacity. To make up for a five day lull, an energy storage of $1200\ \mathrm{GWh}$would be required. This could be met by constucting many more pumped storage schemes similar to the Dinorwig scheme (see later) or by matching car battery charging (see later). Proposals to link European wind farms by a HVDC grid would probably not help in such anti-cyclonic conditions since such weather systems can cover large tracts of the continent.

Current offshore proposals are for the erection of $7\ \mathrm{MW}$ turbines with blade radius of $70\ \mathrm{m}$ and mounted

on the top of a $105\ \mathrm{m}$ tower. For every $\mathrm{MWh_e}$ generated onshore wind farms attract subsidy (Renewable Obligation Certificates (ROCs)) of £42 per $\mathrm{MWh_e}$ (or $4.2\ \mathrm{p\ per\ kWh_e}$ which is *doubled* for offshore generation. As you can check from Table 1 this covers between a third and a half the costs of the electricity generated; therefore provided the turbines last 25 years the return on capital is extremely good.

1.2 Hydro Power

Currently world wide hydro electricity contributes some $1.4\ \mathrm{kWh\,d^{-1}}$ per person (recall that the primary power consumption is $60\ \mathrm{kWh\ d^{-1}}$ per person) and it is estimated that this might be increased to $3.6\ \mathrm{kWh\ d^{-1}}$ per person. Most of the potential for development is in Africa, Asia and Latin America. Droughts, floods, lack of snow fall and late thaws, silting, dam failures, induced earthquakes and methane emissions can make hydro electric generation problematic. The hydro resource in the UK is limited to some 2% of electricity generation but it plays an important role in *energy storage and demand matching* through four pumped storage schemes amounting to a total storage of $30\ \mathrm{GWh}$. A pumped storage system pumps water from a low reservoir to a high reservoir at times of low demand and cheap electricity, and then the flow is reversed so that high cost elecricity is generated to meet high demand. Mackay describes the Dinorwig pumped storage scheme in North Wales as the 'Queen' of the four facilities - it can store $9.1\ \mathrm{GWh}$ and can be switched on in 12 seconds to deliver a power of $1.3\ \mathrm{GW_e}$, the maximum being $1.7\ \mathrm{GW_e}$. The efficiency ie the energy output divided by the energy required to pump water back to the upper reservoir is 70%. At current prices $1\ \mathrm{kWh}$ of storage would cost about £$0.15\mathrm{k}$ in a pumped storage scheme, a figure however very dependent on how capital costs which largely reflect the storage and generating capacity are matched by the income stream which reflect mean transfer volume between the upper and lower reservoirs and thus the electric power demand to smooth the grid.

Suppose the upper reservoir is $h\ \mathrm{m}$ above the horizontal input pipe (cross section A) to the turbine and that water of density ρ flows in the pipe with speed v. At the entry to the pipe the water pressure is $\rho g h$ (g is the acceleration due to gravity), the force on the water is $\rho g h A$ and if the water moves a distance dx the element of work dW is given by $dW = F dx$ and the power P is given by $P = \frac{dW}{dt} = F\frac{dx}{dt} = Fv$, whence $P = \rho g h A v = \rho g h Q$ where Q is the *volume* flow rate of the water. The energy stored is given by $\rho V_{res} g h$ where V_{res} is the water volume in the upper reservoir.

The power in the water has to be converted into electricity through a turbine. Water power was revolutionized in 1832 by the invention of the Fourneyron turbine which was a great improvement over water mill wheels. Efficiencies of $\approx 90\%$ can be achieved and the turbines at Dinorwig also pump water uphill as well as generating electricity. By building more pump storage schemes in the Bowydd and Croesor valleys in Snowdonia and further developments in Scotland a storage capacity of $1200\ \mathrm{GWh}$ might be achieved but this would provoke local opposition from areas already earmarked as windfarm sites.

For large water heads and relatively low flow-rates, the **Pelton wheel turbine** is often used to generate electricity. The maximum efficiency can be determined as follows. The water jet moves with speed u and the cup is moving with speed u_c. In the rest frame of the cup the water strikes the cup surface with speed $u - u_c$ and rebounds with speed $-(u - u_c)$ so the total rate of change of momentum i.e. the force F on the cup, is the mass per second striking the cup ρQ times the speed change $2(u - u_c)$, i.e. $F = 2\rho Q(u - u_c)$ where Q is the *volume* flow rate of the water. The element of work dW the force does on the cup of the Pelton wheel in moving a distance dx is $F dx$ and the power is $P = \frac{dW}{dt}$, i.e. $F\frac{dx}{dt}$ or $F u_c$ ie $P = 2\rho Q(u - u_c)u_c$.

For the maximum power $\frac{dP}{du_c} = 0$ yields $u_c = \frac{1}{2}u$ and $P_{max} = \frac{1}{2}\rho Q u^2$ which is the rate of kinetic energy flow of the incoming water stream, thus the efficiency is unity. This cannot be achieved in practice because the water stream has to be deflected backwards at an angle so as to avoid the next cup on the rim of the Pelton wheel.

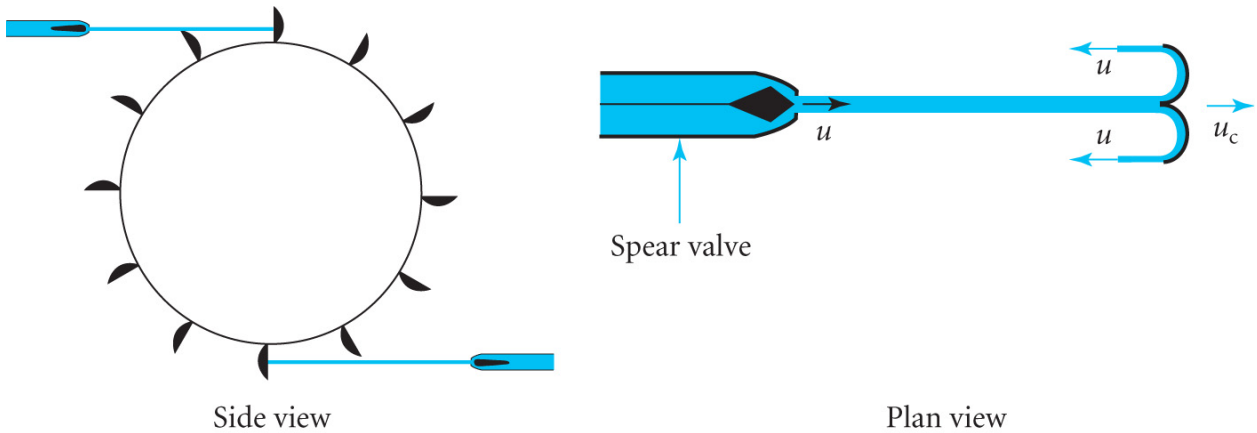

Figure 6: The Pelton wheel.

1.3 Wave and Tidal Power

The UK is particularly favoured to exploit tidal power since estuaries, the continental shelf and resonance phenomena combine to create large tidal ranges and strong tidal currents. It is also favoured by the sea waves, initiated by the wind, which are incident on an extensive coast line. Much more so than wind and wave power tidal power is predictable but both wave and tidal power are difficult and costly to extract.

Water waves with wavelength much smaller and much greater than the depth

Water waves are more complicated than EM waves where the medium is not displaced, or sound waves and waves on a string where the displacements of the medium are either longitudinal or transverse respectively. A water wave causes the water to move both longitudinally and transverse to the direction of propagation. **From this point on we derive the unified theory of water waves. THIS WILL NOT BE EXAMINABLE until we reach a simpler treatment.**

The definition of the potential ϕ
The basic assumption is that the velocity $u\hat{i} + v\hat{j}$ of the water where u is the water speed in the direction of propagation, and v the speed transverse to it, is derivable from the gradient of a scalar potential ϕ, i.e. :

$$u\hat{i} + v\hat{j} = \nabla\phi = \frac{\partial\phi}{\partial x}\hat{i} + \frac{\partial\phi}{\partial y}\hat{j}\ , \text{ so that } u = \frac{\partial\phi}{\partial x} \text{ and } v = \frac{\partial\phi}{\partial y}.$$

Boundary conditions on water surface
In the y direction (perpendicular to the direction of propagation) the equation of motion of a water particle is :

$$\rho\frac{\partial v}{\partial t} = -\frac{\partial p}{\partial y} - \rho g \ \text{ whence by integrating w.r.t } y \text{ from } y \text{ to } h \ \ \rho\frac{\partial\phi}{\partial t} = -p - \rho g h.$$

On the surface the pressure is constant and we set $p = 0$ and on the surface also we have $\partial h/\partial t = v = \partial\phi/\partial y$ so that the two surface boundary conditions are :

$$\frac{\partial\phi}{\partial t} = gh \ \text{ and } \ \frac{\partial h}{\partial t} = \frac{\partial\phi}{\partial y}.$$

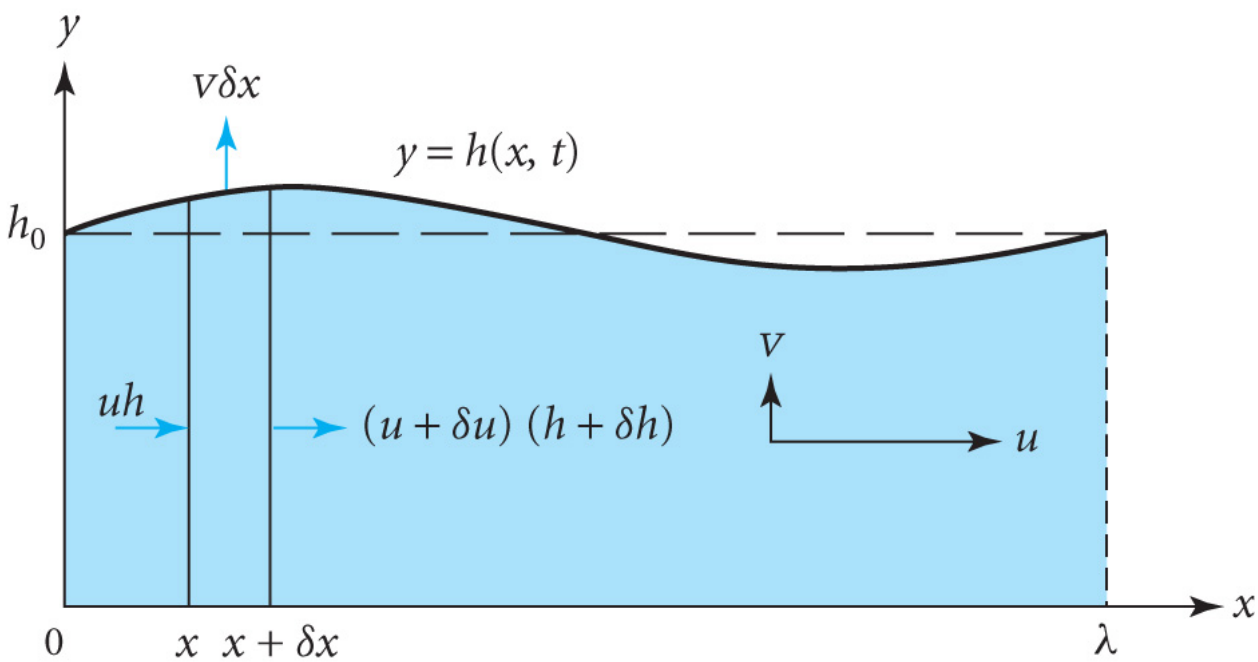

Figure 7: Water wave theory.

The choice of ϕ

The strategy now is to choose ϕ such that the speed $v = \frac{\partial \phi}{\partial y}$ satisfies the boundary condition $v = 0$ when $y = 0$ and also satisfies the surface boundary conditions above. The choice is :

$$\phi = A\cosh(ky)\sin(kx - \omega t)\ ,$$

so that :

$$v = \frac{\partial \phi}{\partial y} = \frac{\partial y}{\partial t} = Ak\sinh(ky)\sin(kx - \omega t) = A\frac{(e^{ky} - e^{-ky})}{2}\sin(kx - \omega t).$$

The choice of $\phi = A\cosh(ky)\sin(kx - \omega t)$ ensures through the $\sinh(ky)$ factor that $v = 0$ when $y = 0$ and the $\sin(kx - \omega t)$ factor restricts the wave solutions to simple sinusoidal waves. The wave number $k = 2\pi/\lambda$, λ is the wavelength (i.e. fix the time by taking a 'photograph' of the wave - the length of one complete cycle would be λ) and ω is the angular frequency $\omega = 2\pi f$ where f is the frequency (i.e.at a fixed position 'count' the crests that pass in one second). It thus follows that the phase velocity ie the distance a crest moves in one second, c is given by $c = f\lambda = \omega/k$.

Since $v = \frac{\partial \phi}{\partial y} = Ak\sinh(ky)\sin(kx - \omega t)$ and on the surface $v(y = h_0) = \frac{\partial h}{\partial t}$, h may be determined by integrating the expression for v over t to yield :

$$h = Ak\sinh(kh_0)(-1)\cos(kx - \omega t)\frac{1}{-\omega} = \frac{Ak}{\omega}\sinh(kh_0)\cos(kx - \omega t),$$

and :

$$\frac{\partial h}{\partial x} = -\frac{Ak^2}{\omega}\sinh(kh_0)\sin(kx - \omega t).$$

Applying the surface boundary condition $\partial\phi/\partial t = -gh$ yields the dispersion relation for the square of the phase velocity :

$$c^2 = \frac{\omega^2}{k^2} = \frac{g}{k}\frac{(e^{kh_o} - e^{-kh_0})}{(e^{kh_o} + e^{-kh_0})}\ .$$

We see there are two limiting behaviours :

- If $kh_0 \gg 1$, i.e. $\lambda \ll 2\pi h_0$, i.e. the wavelength is much **smaller** than the depth then $e^{-kh_0} \to 0$ and :

$$c^2 = \frac{g}{k} \text{ or } c = \sqrt{\frac{g\lambda}{2\pi}} \ ,$$

  so the wave propagation is dispersive, i.e. the phase speed depends on the wavelength.

- If $kh_0 \ll 1$, i.e. $\lambda \gg 2\pi h_0$, i.e. the wavelength is much **larger** than the depth then :

$$(e^{kh_o} - e^{-kh_0}) = (1 + kh_0 + ...) - (1 - kh_0 + ...) = 2kh_0, \text{ and } (e^{kh_o} + e^{-kh_0}) = 2 \ ,$$

  so that :

$$c^2 = gh_0 \text{ and } c = \sqrt{gh_0}$$

  and the propagation is non dispersive.

The motion of the water

In the absence of a wave, the water is still and wave propagation causes the water at point (x, y) to be displaced from the static position by (X, Y), i.e. we fix (x,y) and consider sinusoidal displacement X and Y from this position. Since we know u and v we can find X and Y by integrating u and v over time. For X we have :

$$u = Ak\cosh(ky))\cos(kx - \omega t) = \frac{\partial x}{\partial t} = \frac{\partial X}{\partial t} \text{ so } X = -\frac{Ak}{\omega}\cosh(ky)\sin(kx - \omega t).$$

For Y we have :

$$v = Ak\sinh(ky))\sin(kx - \omega t) = \frac{\partial y}{\partial t} = \frac{\partial Y}{\partial t} \text{ so } Y = \frac{Ak}{\omega}\sinh(ky)\cos(kx - \omega t).$$

Note also that at $y = h_0$:

$$Y = h = \frac{Ak}{\omega}\sinh(kh_0)\cos(kx - \omega t) = a\cos(kx - \omega t) \text{ , where } a = \frac{Ak}{\omega}\sinh(kh_0)$$

is the *ampitude* of the wave. Using $\cos^2(kx - \omega t) + \sin^2(kx - \omega t) = 1$ then X and Y satisfy the equation for an ellipse :

$$\frac{X^2}{\cosh^2(ky)} + \frac{Y^2}{\sinh^2(ky)} = \frac{a^2}{\sinh^2(kh_0)} \ .$$

That is, the water moves in elliptical paths below the surface. For waves where λ is much smaller than the depth then the elliptical motion becomes a circular motion as shown in Figure 8.

Amplititude of the longitudinal water speed u in terms of the surface wave amplitude a

We have :

$$u = Ak\cosh(ky)\cos(kx - \omega t) = Ak\sinh(ky)\frac{\cosh(ky)}{\sinh(ky)}\cos(kx - \omega t) = Ak\frac{(e^{kh_o} + e^{-kh_0})}{(e^{kh_o} - e^{-kh_0})}\cos(kx - \omega t) \ ,$$

which for the case where $kh_0 \ll 1$, i.e. $\lambda \gg 2\pi h_0$ (that is, the wavelength is much *larger* than the depth), then if :

$$Y = a\cos(kx - \omega t) \text{ then } u = b\cos(kx - \omega t) \text{ , where } b = \frac{\omega}{kh_0}a \ .$$

We could carry on and straightforwardly calculate the power carried by waves but we shall use measured values. (Note that the above treatment yields the correct result even though the static rather than the dynamic

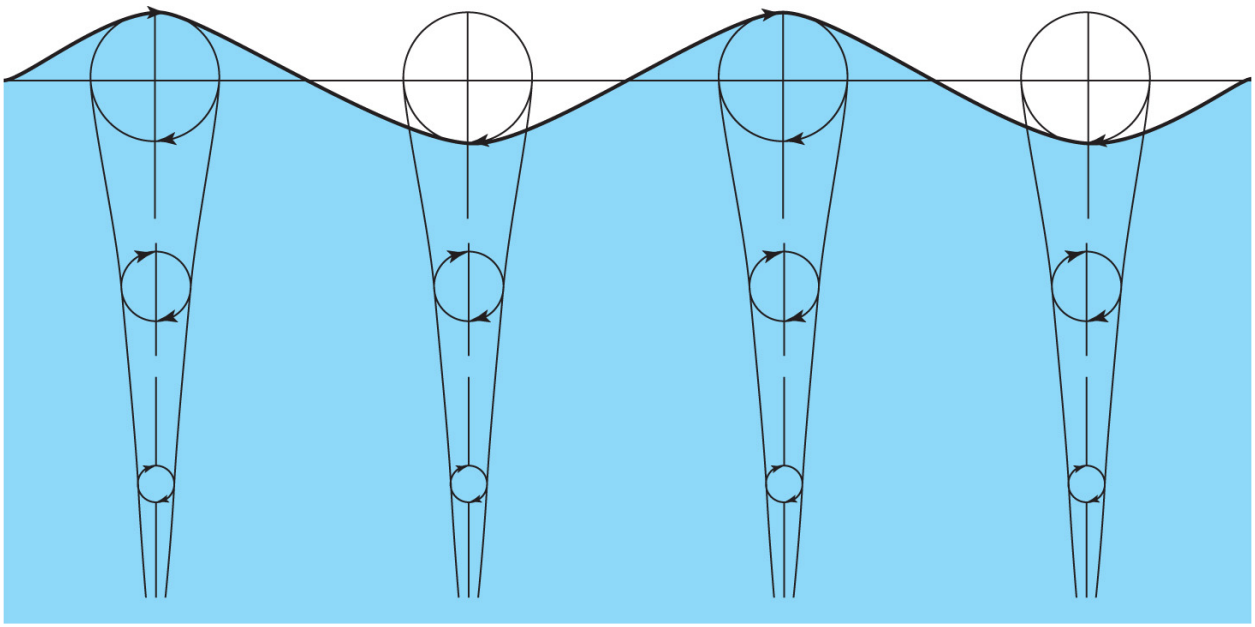

Figure 8: Water wave with wavelength much smaller than the depth.

pressure is used.)

FROM THIS POINT ON IS EXAMINABLE

The dispersion relation for water waves is :

$$c^2 = \frac{\omega^2}{k^2} = \frac{g}{k}\frac{(e^{kh_o} - e^{-kh_0})}{(e^{kh_o} + e^{-kh_0})} \ ,$$

and we see there are two limiting behaviours :

- If $kh_0 \gg 1$, i.e. $\lambda \ll 2\pi h_0$, i.e. the wavelength is much **smaller** than the depth then $e^{-kh_0} \to 0$ and :

  $$c^2 = \frac{g}{k} \text{ or } c = \sqrt{\frac{g\lambda}{2\pi}} \ ,$$

  so the wave propagation is dispersive, i.e. the phase speed depends on the wavelength.

- If $kh_0 \ll 1$, i.e. $\lambda \gg 2\pi h_0$, i.e. the wavelength is much **larger** than the depth then :

  $$(e^{kh_o} - e^{-kh_0}) = (1 + kh_0 + ...) - (1 - kh_0 + ...) = 2kh_0, \text{ and } (e^{kh_o} + e^{-kh_0}) = 2 \ ,$$

  so that :

  $$c^2 = gh_0 \text{ and } c = \sqrt{gh_0}$$

  and the propagation is non dispersive.

Power from the waves

The wind blowing over the ocean creates waves with wavelengths of the order 100 meters and are thus waves with wavelengths much *less* than the ocean depth with most of their power contained within $\lambda/4$ below the surface. Ocean swells are those waves created by winds blowing over the distant seas of the Atlantic and as waves approach a gently sloping beach both the phase velocity and the wavelength decrease. An average wave power of $40\ \mathrm{kW}$ per meter flows across about 1000 km towards the westerly British coast. This power is intermittent and even if half the coastline were covered with wave power devices with 50% efficiency this would only supply $4\ \mathrm{kWh\ d^{-1}p^{-1}}$ of electricity since :

$$P = \frac{40 \times 24 \times 1000 \times 1000 \times 0.5 \times 0.5}{60 \times 10^6} \approx 4\ \mathrm{kWh\ d^{-1}p^{-1}}.$$

Theory suggests that for waves with wavelengths much *less* than the ocean depth that this power may be extracted with reasonable efficiency.

Consider a buoy oscillating in the sea and generating water waves of wavelength λ and imagine it to work in reverse so that power is extracted. Power would be extracted efficiently from a length $\approx \lambda$ from the wave front. Although no device can be tuned for the full frequency spectrum of the waves, nevertheless there is reasonable grounds for good extraction efficiencies.

All such wave power devices have to survive the inhospitable environment of the sea. Here we describe the **'Oyster'** wave power generator which has been operating successfuly in the nearshore of the Orkney Island north of Scotland. In the upgrade which consists of three modules, each module is made up of a 200 tonne buoyant flap of length 26 meters perpendicular to the wave fronts and height 16 meters. The flap is hinged to a 36 tonne base securely fixed to the sea bottom at a depth of $10 - 12$ meters and the flap, which protrudes the water surface moves to and fro under the wave motion. (In heavy seas the flap would be submerged and would avoid some of the pounding of the storm waves.) The motion of the flap is used to pressurise fresh water in a pipeline that goes to a land based electricity turbine generator before returning to the Oyster device. The Oyster 800 wave power generator is rated at $3 \times 800\ \mathrm{kW}$, i.e. $2.4\ \mathrm{MW}$ so it produces maximum power at the rate of $30\ \mathrm{kW\ m^{-1}}$ of the wave front and the Aquamarine Company inform us that they are working to make costs competitive with offshore wind power.

Tides

The moon circles the earth every 28 days so its position in the sky advances by $24 \times 60/28 = 51.4\text{min}$ per day and due to gravitational imbalance there are two tidal bulges, one towards and the other away from the moon, on the earth at any instance. There will be two high and two low tides per day separated by the tidal period of $12\text{hrs}.25\text{min}$. The gravitational effect of the sun is about one third to one half that of the moon and when they are aligned on the same side of the earth we get 'spring tides' and 'neap tides' when opposite. These tides, which have amplitudes $\approx 0.4\text{m}$ in deep ocean, propagate as tidal waves with a phase velocity less than the speed of rotation of the earth and whose wavelength is much **greater** than the ocean depth (this is the other limiting case $kh_0 \ll 1$, i.e. $\lambda \gg 2\pi h_0$ described above). The wave height, wavelength and water speed is amplified by the continental shelf, tidal resonance, narrowing estuaries and by narrow straits between the mainland and an island or between closely separated islands. UK tidal power in the direction of the UK is estimated to be between 150 and 600 kW per meter of the wave front. The difficulty with tidal power is its extraction.

Theory of tidal waves

The pressure in the water
In Figure the wave profile is given by $y = h(x,t)$ where the wave motion occurs about the mean height h_0 of the water surface above the ocean bottom. On the surface the pressure is the atmospheric pressure p_0 and at the point (x,y) the static pressure $p(x,y)$ under water is given by :

$$p(x,y) = p_0 + \rho g(h(x,y) - y), \text{ so that } \frac{\partial p}{\partial x} = \rho\, g \frac{\partial h}{\partial x}, \text{ where } \rho \text{ is the water density.}$$

The equation of motion of the water in the direction of propagation and mass conservation
We now obtain the equation of motion in the x direction of a differential volume element $dxdydz$ surrounding the point x, y in the water by applying Newton's 2nd law, that is :

$$\text{mass} \times \text{accel.} = \rho dxdydz \times \frac{\partial u}{\partial t} = ((\text{pressure times area at } x) - (\text{pressure times area at } x + dx))dydz$$

$$= pdydz - \left(p + \frac{\partial p}{\partial x}dx\right) dydz. \text{ Thus } \rho\frac{\partial u}{\partial t} = -\frac{\partial p}{\partial x} = -\rho g\frac{\partial h}{\partial x}.$$

From the static pressure equation (which is valid in the limit of the wavelength λ being much greater than the water depth h_0) and the equation of motion we have already derived the equation :

$$\frac{\partial u}{\partial t} = -\frac{\partial p}{\partial x} = -g\frac{\partial h}{\partial x},$$

which indicates that the horizontal component of the water speed u is independent of y - only true in the $\lambda \gg h_0$ limit.

We now apply the **mass conservation** of water to the slice of water of unit breadth between the planes at x and $x + \delta x$ in Figure . By mass conservation the difference in the volume flowing from x to $x + \delta x$ equals the volume displaced per second $v\delta x$ in the vertical direction. Thus :

$$uh = (u + \delta u)(h + \delta h) + v\delta x = uh + u\delta h + h\delta u + \delta h\delta u + v\delta x\ .$$

Therefore :

$$0 = u\frac{\partial h}{\partial x}dx + h\frac{\partial u}{\partial x}dx + \frac{\partial h}{\partial t}dx + \delta h\delta u\ .$$

Discarding the term $\delta h \delta u$ and noting that the first term on the right is very small compared with the two remaining terms, we find that :

$$\frac{\partial u}{\partial x} = -\frac{1}{h_0}\frac{\partial h}{\partial t} \text{ , and using the first result in this section } \frac{\partial^2 h}{\partial x^2} = \frac{1}{gh_0}\frac{\partial^2 h}{\partial t^2} \ .$$

The first equation enables the tidal current speed u to be related to the tidal wave amplitude and the second is the wave equation for tidal waves where the wavelength is much greater than the depth with a phase velocity of $\sqrt{gh_0}$.

Tidal Resonance

In order to understand this phenomenon, we start by considering a uniform channel of length L such that the end at $x = 0$ is open to the sea and the other end at $x = L$ is a vertical wall. We consider a travelling wave of the form $h_i(x,t) = a\cos(kx - \omega t)$ incident at the open end of the channel. From the continuity equation above we have :

$$\frac{\partial u}{\partial x} = -\frac{1}{h_0}\frac{\partial h}{\partial t} = -\frac{\omega a}{h_0}\sin(kx - \omega t) \text{ which yields by integration } u_i(x,t) = \frac{\omega a}{kh_0}\cos(kx - \omega t) \ .$$

In order to satisfy the boundary condition that $u = 0$ at $x = L$ we superimpose a reflected wave of the form :

$$u_r(x,t) = \frac{\omega a}{kh_0}\cos(kx{+}\omega t) \text{ whose amplitude given by the continuity equation is } h_r(x,t) = -a\cos(kx{+}\omega t) \ .$$

The resultant horizontal water speed and the tidal amplitude are given by the **standing waves** :

$$u(x,t) = \frac{2\omega a}{kh_0}\cos(kx)\cos(\omega t) \text{ and } h(x,t) = 2a\sin(kx)\sin(\omega t) \ .$$

In the above $kx = \frac{\pi x}{2L}$ since the lowest resonance condition occurs when $kL = \pi/2$ or $2\pi/\lambda L = \pi/2$ or $L = \lambda/4$.

At the channel entrance ($x = 0$) the horizontal water speed is a maximum at twice the speed of the incident wave and the tide amplitude is zero whilst at $x = L$ the horizontal speed is zero and the tidal amplitude twice that of the incident wave. The resonance is amplified at each high tide separated by 12.5hrs and in the narrowing estuary the height of the tide is amplified over that in the uniform channel. Bottom friction modifies this simple picture - an incoming wave looses some of its amplitude and it meets a reflected wave which also has its amplitude reduced by the friction so the standing waves are modified such that times of high tide occur earlier towards the estuaries mouth incoming progressive tidal waves supply energy to overcome bottom friction and the energy losses of the resonant tidal system. A most complicated system to which must be added the effect of the Coriolis force!

In deep ocean progressive waves have speeds given by $c = \sqrt{gh_0}$ which is $\approx 200 \text{ m s}^{-1}$ for a 4000 m deep ocean. Since the tidal period T is 12.5hrs the tidal frequency f is $2.2 \times 10^{-5} \text{ s}^{-1}$ (note that $f = 1/T$) and the wavelength $\lambda = c/f \approx 10^7 \text{ m}$ or $\approx 10^4 \text{ km}$ which is about twice the width of the Atlantic ocean. Half wavelength standing waves are set up such there is a high tide on European coast and a low tide on the American coast and vice versa every 12.5hrs.

As these tidal waves come up the continental shelf the phase speed reduces and the wave length gets shorter (since the frequency remains the same) and the wave amplitude increases from the initial sub meter in deep ocean, as a result of wave energy conservation. In an estuary where the water depth is 20 m then the phase velocity is $\approx 14 \text{ m s}^{-1}$ and the wavelength $\approx 700 \text{ km}$ and the resonance length $\lambda/4 = 175 \text{ km}$, close to the length of the Severn Estuary.

Power from a tidal barrages

Power from the Ebb Tide

One way of extracting tidal power is to build a barrage across an estuary and ideally at low tide in the estuary some 6hrs 12.5 min after the upper basin has been filled, water from the upper basin of area A is allowed to flow *quickly* through the turbines to the estuary to produce electricity. In practice the water in the upper basin is released some four hours after high tide and the flow through the turbines continues for some four hours before the estuary is significantly filled again. This arrangement is a compromise between maintaining the greatest water head above the turbines and the longest period of power generation. In this Ebb Tide generation the power is generated for only about a third of the tidal period of 12hrs. 25min.

Between high and low tide separated by $6\text{hrs}.15\text{min}.$ a mass of water ρRA will have flowed out of the upper basin, where R is the tidal range and ρ is the density of the water. *Provided the flow is rapid* the centre of gravity of the water mass falls a distance of $R/2$ and thus the the energy stored E is given by :

$$E = g\rho ARR/2 = \frac{g\rho AR^2}{2} \text{ and the mean power } P \text{ by} P = \frac{g\rho AR^2}{2T} \ ,$$

where T is the tidal period (12.5hrs.), i.e. the time from high tide to the next high tide and g is the acceleration due to gravity. For the Severn estuary where $A = 520\ \text{km}^2$ and $R = 7\ \text{m}$, then :

$$E = \frac{9.81 \times 10^3 \times 520 \times 10^6 \times 7^2}{2} = \ 34.6\ \text{GWh} \text{ , and the average power } P = \frac{34.6}{12.5} = 2.77\ \text{GW}.$$

Power from the Flood Tide?

Could the above procedure be repeated for the Flood Tide, i.e. starting with the upper basin empty at low tide then waiting 6hrs. 25min. until the estuary is full and then releasing the water back into the basin? Yes in principle, but the energy yield may be somewhat less than obtained for the Ebb Tide.

Power from the Ebb and the Flood Tides

There is a configuration of the tides that in practice generates almost as much energy as the Ebb mode and where the power is generated for about 8hrs. or so in the 12hrs. 25min. tidal period T. The **ideal** situation is now discussed where water flows through bi-directional turbines which do not require a significant water head of pressure.

By controlling water flows a 'steady state' can be set up where the height of water on the **estuary side** of the barrage is given by $h_e(t) = h_{oe}\cos\left(\frac{2\pi t}{T}\right) = \frac{R_{0e}}{2}\cos\left(\frac{2\pi t}{T}\right)$, where R_{0e} is the tidal range at the barrage. The height of the water on the **upper basin side** of the barrage h_b is phase delayed with respect to h_e by the phase angle ϕ and has the form $h_b(t) = h_{0b}\cos(\frac{2\pi t}{T} - \phi) = \frac{R_{0b}}{2}\cos(\frac{2\pi t}{T} - \phi)$, where R_{0b} is the tidal range in the upper basin.

When $t = \frac{\phi T}{2\pi}$, the height of water on the basin side of the barrage reaches a maximum value given by $h_b = \frac{R_{0b}}{2}$. Assuming that at this point the height of the water on both sides of the barrage is equal (so there is now flow through the turbines), then $R_{0b} = R_{0e}\cos\phi$, indicating that in this mode the tidal range in the upper basin is reduced with respect to that in the estuary. In addition we can write $h_b(t) = h_{0e}\cos\phi\cos(\omega t - \phi)$, where $\omega = 2\pi/T$.

Differentiating the expression for $h_b(t)$ gives :

$$\frac{dh_b}{dt} = -h_{0e}\omega\cos\phi\sin(\omega t - \phi) \ ,$$

where it should be noted that a negative slope indicates the level behind the barrage falling and hence water flowing into the estuary. From the above expressions we can see that when $(\omega t - \phi) = \pi/2$ we have $h_b = 0$ and dh_b/dt will be at its minimum value, corresponding to **maximum** flow rate from the upper basin.

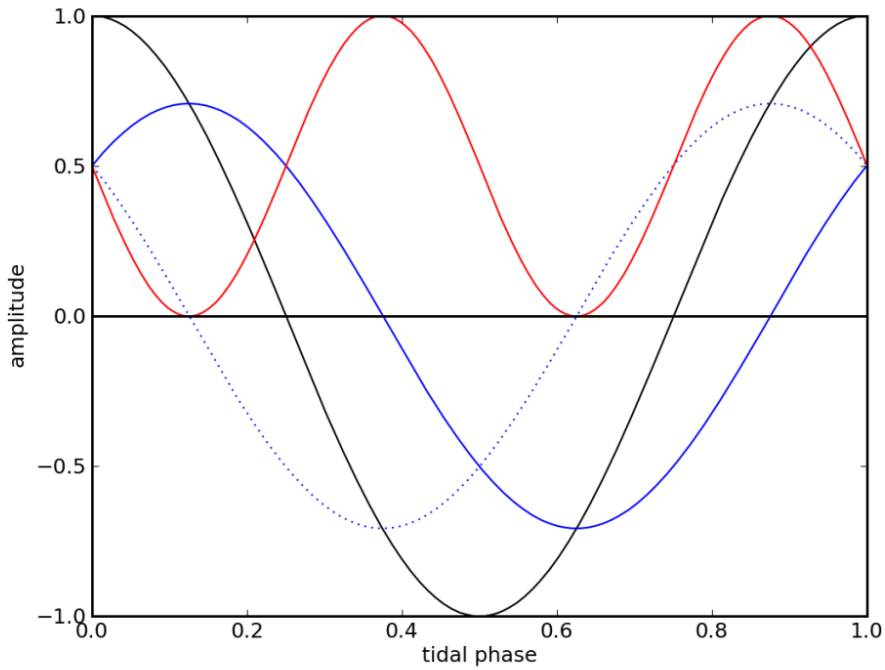

Figure 9: The optimum Ebb-Flood Tide power generation scheme. The height of water in the estuary is given by the black curve, and the phase-shifted height of water in the barrage by the solid blue curve. The flow through the turbines is given by the dashed-blue curve and the red curve is proportional to the instantaneous power output.

The height difference across the barrage is given by :

$$\Delta h = h_b(t) - h_e(t) = h_{0e}\left[\cos\phi\cos(\omega t - \phi) - \cos(\omega t)\right] \ ,$$

and therefore this is a maximum when :

$$\frac{d\Delta h}{dt} = h_{0e}\omega\left[-\cos\phi\sin(\omega t - \phi) + \sin(\omega t)\right] = 0 \ .$$

We then substitute the condition $(\omega t - \phi) = \pi/2$ because we want the maximum flow rate to coincide with the maximum head-height in order to maximise the overall power generated. This gives :

$$-\cos\phi + \sin(\pi/2 + \phi) = 0 \ .$$

This is manifestly satisfied by $\phi = \pi/4$ or this can be shown more explicitly by using the appropriate trigonometric identities.

The instantaneous power is given by $\rho g \Delta h Q$ where Q is the volume flow rate and assuming 100% efficiency. The volume flow rate in turn is given by :

$$Q = -\frac{dh_{0b}}{dt} \times A \ ,$$

where A is the area of the upper basin and the minus sign, as discussed above, accounts for the fact that water is flowing into the estuary when the height of water behind the barrage is falling. Using the above

expressions for Δh and dh_{0b}/dt therefore gives :

$$P = \left\{ \rho g h_{0e} \left[\cos\phi \cos(\omega t - \phi) - \cos(\omega t)\right] \right\} \times \left\{ -\frac{d}{dt} \left[h_{0e} \cos\phi \cos(\omega t - \phi)\right] A \right\} ,$$

Using the above expression for dh_b/dt we therefore have :

$$P = \left\{ \rho g h_{0e} \left[\cos\phi \cos(\omega t - \phi) - \cos(\omega t)\right] \right\} \times \left\{ h_{0e} \omega \cos\phi \sin(\omega t - \phi) A \right\} .$$

To find the maximum power we substitute $(\omega t - \phi) = \pi/2$ and $\phi = \pi/4$ to give :

$$P_{\max} = -\rho g h_{0e} \cos\left(\frac{3\pi}{4}\right) \times h_{0e} \omega \cos\left(\frac{\pi}{4}\right) A .$$

Noting that $\cos(3\pi/4) = -1/\sqrt{2}$, $\cos(\pi/4) = 1/\sqrt{2}$ and $\omega = 2\pi/T$ we have :

$$P_{\max} = \rho g h_{0e}^2 \frac{2\pi A}{2T}$$

Finally, noting that $h_{0e} = R_{0e}/2$ we have the stated result :

$$P_{\max} = \frac{\pi}{4} \frac{\rho g A R_{0e}^2}{T} ,$$

and the application of a factor of $1/2$ gives the corresponding expression for ther average power :

$$P_{\text{mean}} = \frac{\pi}{4} \frac{\rho g A R_{0e}^2}{2T} ,$$

This expression for the mean power is close to that of the simple Ebb Flow estimate above, but it is produced over about twice the time period.

Note that in all these barrage/lagoon estimates we have set the water head at the turbines to be zero - in practice of a course a head is required so that the above estimates will be too optimistic.

Tidal Barrage and Lagoons

The Corlan Hafren proposal to build a 16 km barrage across the Severn estuary from Lavernock Point in South Wales to Brean Down in Somerset and to generate electricity from the ebb and flood tides as indicated above producing a mean power of 2.7 $\mathrm{GW_e}$ at a projected captial cost of $£5 - 10,000$ per $\mathrm{kW_e}$ (estimates vary widely) has as yet not been accepted because of cost and the lack of a complete environmental impact report. The construction period is 11 years and the power output would not always match demand.

There is an ongoing proposal to construct a lagoon in the Swansea bay which operates in the same way as the Corlan Hafren proposal barrage. It would produce about $1/50$ of the power at about 1.5 times the cost. The mean power output would be 57 $\mathrm{MW_e}$, the generating capacity is 160 $\mathrm{MW_e}$ to match the peak power, and the construction period is 3 years. Again the output would not always match demand but the construction of lagoons around the UK would ameliorate this problem since high tide times span the range of twelve hours around the coast.

Although the costs per $\mathrm{kWh_e}$ are higher and the total power stored less (scaling as A/R^2), the smaller absolute capital costs and the reduced construction period leading to an earlier income stream make such smaller projects easier to fund.

The apparently higher cost of the Corlan Hafren and Lagoon schemes as compared with nuclear power should not in itself prove a show stopper since the capital expenditure can be ammortized over 120 yrs rather

than the 60 yrs. of the EPR reactor. In these days of low interest there are several sovereign and financial institutions states willing to invest in such long term projects.

Note added : as these notes are being completed the UK government have expressed encouragement for the Tidal Lagoon Power (TPL) Company proposal in Swansea Bay. TPL forsee a base price of $17\mathrm{p/kW_e}$ generated as a 'First Of a Kind Project' (FOAK) for 35 years, falling to $9.25\mathrm{p/kW_e}$ thereafter. It is anticipated that $9.25\mathrm{p/kW_e}$ generated will be the cost from a future seven times larger Cardiff/Newport lagoon scheme. The UK tidal lagoon potential is some 7% of the UK electricity demand. We are grateful to Prof. Roger Falconer of Cardiff University, one of the leaders of the Corlan Hafren proposal for assistance in this section.

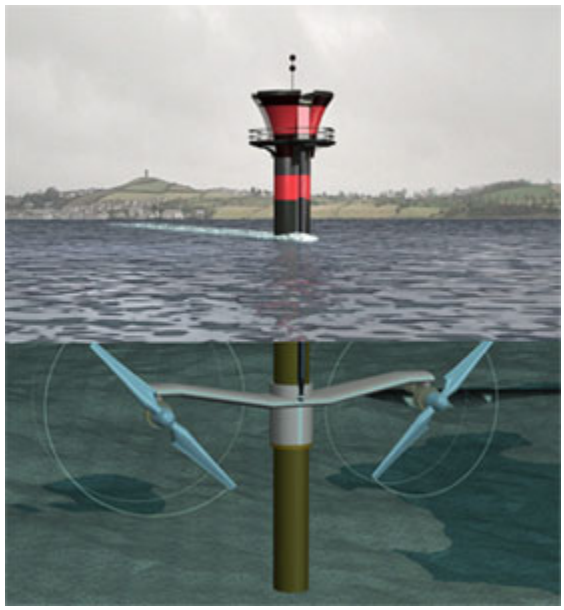

Figure 10: The SeaGen turbine Strangford Loch.

Power from the tidal stream

There are some six sites around the UK where the tidal stream speeds are considerably greater than $1.0\ \mathrm{m\ s^{-1}}$.

Since 2008 2×600 kW tidal stream turbines have been operating in both directions of the tidal stream at the mouth of the Strangford Loch in Northern Ireland. The turbine blades are $16\ \mathrm{m}$ in diameter and the structure weighs 300 tonnes. The turbines operate for 18 to $20\mathrm{hrs.}$ per day and the capital cost is about $£7000$ per installed kW. Hopefully production costs will come down from the prototype cost but it has to be remembered that sea water is a challenging environment. The formulae for wind turbines apply equally well for tidal stream turbines and the Betz limit for the Strangford Loch $600\mathrm{kW}$ turbine in a tidal stream of $2\ \mathrm{m\ s^{-1}}$ is $474\ \mathrm{kW}$. The average power generated by the Strangford Loch turbines has been $0.6\ \mathrm{MW_e}$ which is half the installed capacity. The plan to build tidal stream generators off north Anglesey coast has been abandoned - not an encouraging sign.

The estimates of the power output from tidal steam turbines are reliable provided the turbines are well separated. However a 'wall' of such turbines across an estuary or channel would be expected to alter conditions governing the stream flow itself. To investigate this matter we consider a rectangular channel of length L, cross section A where the water height (head) at one end of the channel is given by $a\cos(\omega t)$.

The water density is ρ and the water speed in the channel is u such that the water volume flow rate Q is given by $Q = uA$. The equation of motion of the water in the channel assuming that L is much smaller than the tidal wavelength, is given by

$$\rho AL\frac{\partial u}{\partial t} = A\rho gacos\omega t - F_{turb} - kQ^2$$

where the term kQ^2 (k is a constant) represents the natural friction force in the channel and F_{turb} is the additional force in the channel from the reaction turbines.

The mass $\times$acceleration of the water mass on the left of the above equation is very small compared to the terms on the right hand side and can be se to zero.

Then we find

$$F_{turb} = A\rho gacos\omega t - kQ^2 \text{ and in the absence of the turbine } Q^2 = Q^2_{max} = \frac{\rho Aga}{k}$$

where Q_{max} is the maximum water flow when no turbines are present.

For the power P use $P = F_{turb} \times u = F_{turb}Q/A$, thus

$$P = (\rho Agacos\omega t - kQ^2)\frac{Q}{A} \text{ and } \frac{dP}{dQ} \text{ yields } (\rho Agacos\omega t - kQ^2)\frac{1}{A} - 2kQ\frac{Q}{A} = 0\ .$$

From the above the maximum power occurs when

$$Q^2 = \frac{1}{3}\frac{\rho Aga}{k}cos\omega t = \frac{1}{3}Q^2_{max}cos\omega t \text{ and that } P_{max} = \frac{2}{3^{3/2}}\rho gaQ_{max}\langle(cos\omega t)^{3/2}\rangle = \gamma\rho gaQ_{max}$$

where $\gamma = 0.22$ when evaluated with the given time average.

The maximum water flow $Q_{max} = uwd$ where u is the maximum water speed without the turbines ($3.4\ \mathrm{m\ s^{-1}}$), w is the channel width $10.2\ \mathrm{km}$ and d is the channel depth $58\ \mathrm{m}$. The mean power from the Pentland Firth $\bar{P}$ is then given by

$$\bar{P} = 0.22 \times 1000 \times 9.81 \times 1.2 \times 3.4 \times 10.2 \times 1000 \times 58 = 5.2 \text{ GW.}$$

It would not be a serious proposal to fill the whole of the Pentland Firth's cross section with turbine to extract this power!! Rather a much more practical proposal would be to install a row of stream turbines across the channel; then power estimates from the tidal stream and the Betz limit would be realistic.

Power from tidal barrages, lagoons and tidal streams is certainly predictable and such generation around the coast of the UK would provide power nearly around the clock since the tide times occur over an eight hour period around this coast. The problem is one of cost and environmental impact.

	CCGT	EPR	ON Wind	OFF Wind	Swan.Lag	Car.New. Lag
Cap. Cost ($£/\mathrm{kW_e}$)	808	5000	1500	3000	7000	5000?
Am. Cap. Cost ($£/\mathrm{MWh_e}$)	9	70	70	85	140?	85?
Fuel ($£/\mathrm{MWh_e}$)	49	5	0	0	0	0
Carbon ($£/\mathrm{MWh_e}$)	18	0	0	0	0	0
CO2 Capture/Storage ($£/\mathrm{MWh_e}$)	0	0	0	0	0	0
Decommision/ Waste	0	2	0	0	0	0
O+M	4	14	30	36	?	?
Elec. Gen. Cost ($\mathrm{p/kWh_e}$)	8	9	10	12	17	9?

Table 2: Summary of CCGT, Nuclear, Wind and Lagoon Power (see notes for further details of each).

1.4 Solar Power

From 1st April 2015 the UK government pays 13.4p for every $\mathrm{kWh_e}$ generated by solar systems less than $4\ \mathrm{kW}$ and has drastically reduced the subsidy for large solar farms. At the equator solar power is about $1\ \mathrm{kW\ m^{-2}}$ but in the UK the average solar power is $110\ \mathrm{W\ m^{-2}}$ on a south facing roof and $100\mathrm{W\ m^{-2}}$ on a horizontal surface. Whilst solar panels can make a useful contribution to domesting hot water and heating in the UK it is not dependable, cannot be conveniently stored and PV (as distinct from thermal) panels are expensive. (But read the end of this section.)

Concentrated Solar Power Plants - CSP can be divided into those plants in which movable mirrors focus the sun's rays onto a central tower containing a turbine or molten salts which can transfer heat to a turbine and those plants where fixed reflectors direct the light at pipes containing fluids or molten salts which are then used to drive turbines.

A proposal to import solar power from the Sahara to Europe via HVDC connection is been actively pursued by the DESERTEC collaboration. The concept of this **CSP** is to concentrate solar energy on pipes containing molten salt which can be used to supply turbines and generate electricity. The power is exported to Europe by HVDC where the transmission losses are about 15%. Solar energy could also be stored in a molten salt reservoir to provide night time generation. Concentrated solar power delivers about $15\ \mathrm{W_e\ m^{-2}}$ and a $145\ \mathrm{km}\ \times 145\ \mathrm{km}$ concentrated solar thermal array would deliver electricity nearly equal to the primary power input of the UK, ($\approx 125\ \mathrm{kWh\ d^{-1}\ p^{-1}}$, neglecting transmission losses. The area is $21\times10^9\ \mathrm{m^2}$ and the power is $300\ \mathrm{GW}$. This corresponds to $300 \times 10^9 \times 8.64 \times 10^4$ J in a day and dividing by the UK population and 3.6×10^6 to convert joules to kWh we get $120\ \mathrm{kWh\ d^{-1}p^{-1}}$. Presumably steps would have to be taken to free such arrays from the effects of desert sand storms!!

There are several solar thermal plants in the world generating between 100 and $370\ \mathrm{MW_e}$ and the capital costs are about $£4000$ per installed kW. The DESERTEC collaboration estimates that electricity costs will be between 6 and 16p per $\mathrm{kWh_e}$.

The cost of PV solar panels has been reduced by a factor 2 so capital costs may well be considerably reduced in future installations. This might be due to the overproduction of PV solar panels in China but should this cost reduction persist then solar power PV plants are cheaper than CSP installations. Indeed in several sunny regions (California, Italy, Spain) 'grid parity' has been achieved. CSP installations however have the advantage of using the molten salt heat transfer to store energy for night time use. A $550\ \mathrm{MW_e}$ PV solar farm is under construction in the Mojave desert USA. It is a $16\ \mathrm{km^2}$ array of 8.8 million cadmium telluride PV solar panels with an anticipated cost of about $£2000$ per installed $\mathrm{kW_e}$ for users in Europe.

2 Compressed Air Energy Storage (CAES)

The concept of energy storage using compressed air has been realized in the US and in particular Germany. There are two CAES plants in the US and one in Germany where the compression is approximately **isothermal** and a prototype plant is being constructed in Germany where the compression is **adiabatic**. For both methods the work done by the compressor, and hence the energy stored $E_{st}$is given by

$$E_{st} = p_f V_f - \int_{V_i}^{V_f} p dV - p_i V_i$$

where $p_i V_i$ is the energy of the volume V_i of air coming into the compressor at pressure, the $-\int pdV$ term is the work done **by** the compressor in changing the state of the gas from the state defined by (p_i, V_i, T_i) to that defined by (p_f, V_f, T_f) and $p_f V_f$ is the work done by the compressor pushing out the volume V_f at pressure p_f.

For **isothermal** compression $T_i = T_f$ and since for a perfect gas $pV = mRT$ (where m is the number of moles), $p_i V_i = p_f V_f = pV = mRT = K$ and the stored energy E_{st}^{is} is given by

$$E_{st}^{is} = -\int_{V_i}^{V_f} p dV = -\int_{V_i}^{V_f} K \frac{dV}{V} = -p_f V_f ln \frac{V_f}{V_i} = p_f V_f ln \frac{p_f}{p_i} = p_i V_i ln \frac{p_f}{p_i} \ .$$

For **adiabatic** compression we have $p_i V_i^{\gamma} = p_f V_f^{\gamma} = pV^{\gamma} = K^{'}$, $p_i V_i = mRT_i$ and $p_f V_f = mRT_f$.
From the above we have $p_i V_i^{\gamma} = p_i V_i V_i^{(\gamma-1)} = mRT_i V_i^{(\gamma-1)}$.
From the above also $p_f V_f^{\gamma} = p_f V_f V_f^{(\gamma-1)} = mRT_f V_f^{(\gamma-1)}$
From these two lines we see that $T_i V_i^{(\gamma-1)} = T_f V_f^{(\gamma-1)}$ so that $(T_f/T_i) = (V_i/V_f)^{(\gamma-1)} = (p_f/p_i)^{\frac{(\gamma-1)}{\gamma}}$.
Thus for the adiabatic $-\int_{V_i}^{V_f} pdV$ term we have

$$-\int_{V_i}^{V_f} p dV = -\int_{V_i}^{V_f} K^{'} V^{-\gamma} dV = + \left[\frac{K^{'} V^{1-\gamma}}{(\gamma-1)} \right]_{V_i}^{V_f} = \frac{1}{(\gamma-1)} (p_f V_f - p_i V_i) \ .$$

Thus

$$E_{st}^{ad} = p_f V_f + \frac{1}{(\gamma-1)} (p_f V_f - p_i V_i) - p_i V_i = \frac{\gamma}{(\gamma-1)} p_i V_i \left(\frac{p_f V_f}{p_i V_i} - 1 \right) = \frac{\gamma}{(\gamma-1)} p_i V_i \left(\frac{T_f}{T_i} - 1 \right) \ .$$

and

$$E_{st}^{ad} = \frac{\gamma}{(\gamma-1)} p_i V_i \left(\frac{T_f}{T_i} - 1 \right) = \frac{\gamma}{(\gamma-1)} p_i V_i \left(\left(\frac{p_f}{p_i} \right)^{\frac{(\gamma-1)}{\gamma}} - 1 \right) \ .$$

Since 1978 a compressed air energy storage (CAES) plant, working under approximately isothermal conditions has been in operation in Huntsdorf Germany. Air is compressed to $70 \ \mathrm{bar}$ pressure into $310,000 \ m^3$ caverns made by disolving the salt within an underground salt deposit. Using the formula derived above for isothermal compression the stored energy E_{stH}^{is} is given by

$$E_{stH}^{is} = p_{fH} V_{fH} ln \frac{p_{fH}}{p_{iH}} = \frac{3.1 \times 10^5 \times 70 \times 10^5 \times ln 70}{3.6 \times 10^{12}} = 2.55 \ GWh \ .$$

This is very much the ideal energy stored. It is difficult in the first place to compress the gas under ideal isothermal conditions since it would take too long and in the so called isothermal release of the stored gas conditions are in fact closer to an adiabatic release and the temperature falls leading to icing problems. In order to avoid this cooling, natural gas is added to the compressed air and the mixture fired. In practice the

overall efficiency, that is the electricity generated by the air turbine divided by the electricity used in the compressors is 42%.

Had the compression been done adiabatically then the energy storage ratio from the **same gas volume at atmospheric pressure** would be 1.974 ($\gamma = 1.4$) from

$$\frac{E_{st}^{ad}}{E_{st}^{is}} = \frac{\gamma}{(\gamma-1)} \frac{\left(\left(\frac{p_f}{p_i}\right)^{\frac{(\gamma-1)}{\gamma}} - 1\right)}{ln\frac{p_f}{p_i}} .$$

ie nearly double the energy stored isothermally. This might arise if the hot gases pass through a heat exchanger into a heat store and emerge cool at room temperature in the cavern. In the power producing mode the pressurised gas would pass back through the heat exchanger and the now hot gas would expand adiabatically through the turbine. However it is impossible that the energy removed from the compression stage can be put back into the gas in the expansion phase so the factor 1.974 is very optimistic.

In Germany a prototype adiabatic CAES, where the heat from the compressed gas is stored and then released to the expanding gas is being developed and it is anticipated the efficiency will be about 70%.

Alternatively if the hot gasses fill the cavern then the stored energy formula needs to be expressed in terms of the final volume $3.1 \times 10^5 \mathrm{m}^3$, the initial pressure 1×10^5 Pa (1 bar and the final pressure 70×10^5 Pa. Thus

$$E_{st}^{ad} = \frac{\gamma}{(\gamma-1)} p_i V_i \left(\left(\frac{p_f}{p_i}\right)^{\frac{(\gamma-1)}{\gamma}} - 1\right) = \frac{\gamma}{(\gamma-1)} p_i V_f \left(\frac{p_f}{p_i}\right)^{\frac{1}{\gamma}} \left(\left(\frac{p_f}{p_i}\right)^{\frac{(\gamma-1)}{\gamma}} - 1\right) = 1.48\ GWh$$

This is the expression to be used to determine the work done in adiabatically compressing for example hydrogen gas - substitute $p_i V_i = RT_i$ to get the required energy per mole.

3 Reducing power demand

Clearly it makes sense to use energy in as efficient a manner posible and to invest sums to save energy rather than to generate it.

3.1 Space Heating

To de-fossilize space heating the 'only game in town' for countries largely lacking in solar power is to greatly improve insulation and to use electric heating in a clever way. For properties with gardens or near rivers, heat pumps should be used so that electrical power 'pumps' heat from the environment into the property. Air source heat pumps could be used for flats, which could act as cooling units in summer. But clearly to make a difference there has to be a substantial investment and effort, much greater in fact than that for the conversion from town to North Sea gas that occurred in the UK during the early 1960's.

3.2 Power from non recyclable waste

Currently the UK is running out of sites to dispose non recyclable waste which amounts to about half a tonne per person per year. If this were combusted it would provide about 7% of the UK's electricity needs albeit with CO_2 emission. There are proposals to extend the number of such plants to about thirty but there is much environmental opposition.

4 Matching carbon neutral power to demand

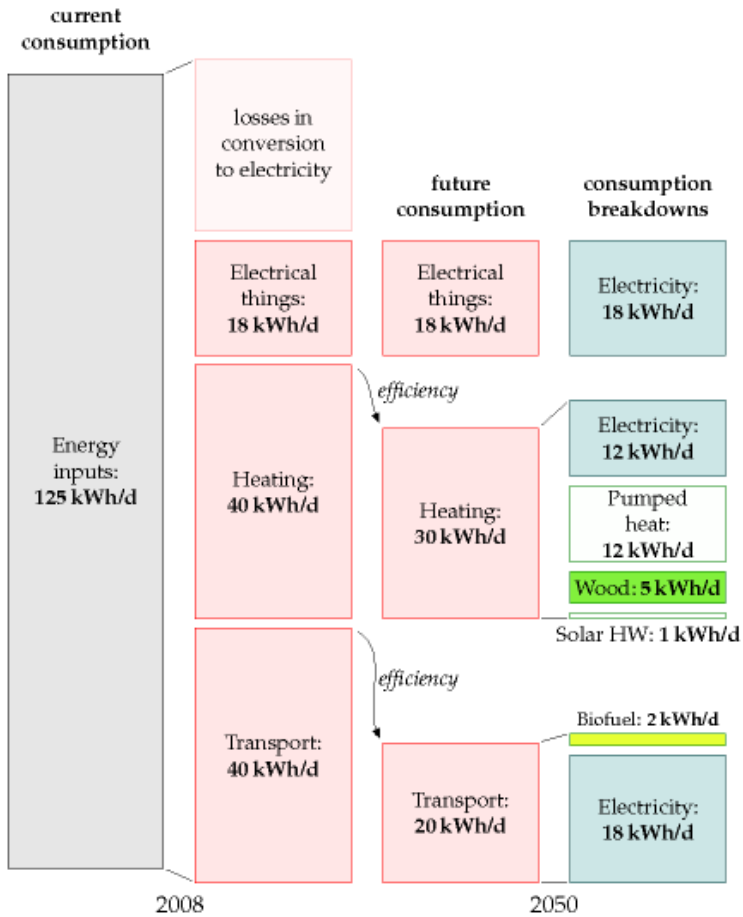

Figure 11: Consumption 2010 and 2050.

Figure 11 summarises how MacKay would reduce the current primary power (or energy per day) of $125\ \mathrm{kWh\,d^{-1}\,p^{-1}}$ in 2007 (which leads to a user consumption of $98\ \mathrm{kWh\,d^{-1}\,p^{-1}}$), to a user power of $68\ \mathrm{kWh\,d^{-1}\,p^{-1}}$ in 2050 by various efficiency measures described in these notes. The use of electricity increases from $18\ \mathrm{kWh\,d^{-1}\,p^{-1}}$ to $48\ \mathrm{kWh\,d^{-1}\,p^{-1}}$ which MacKay rounds up to $50\ \mathrm{kWh\,d^{-1}\,p^{-1}}$ for the 'Five Energy Plans for the UK in 2050' shown in Figure 12.

It should be noted that the Clean Coal would require a greater input of primary power because of the thermodynamic inefficiency and that wind power generation must be accompanied by the appropriate energy storage backup for wind lull periods. As we have seen energy storage costs are in the range 0.1 to 0.5 k£ per kWh stored. From the discussions in this course you should understand broadly the likely difficulties in establishing any one of the five scenarios and you could possibly decide which is most likely to be implemented.

For plans with a large nuclear component, the success of the French nuclear program, up to the current EPR difficulties, must be reassuring. However it would be essential to embark on a global, committed program to develop reactors that convert, or breed, fissile material from fertile material so as to prolong the nuclear age. UK nuclear plans are clouded by the French President's desire to reduce nuclear electricity generation in France from 80 to 60% and the current EPR EDF/AREVA difficulties described previously. Nevertheless the UK government is steadfast in its aim for a large nuclear component in the future energy

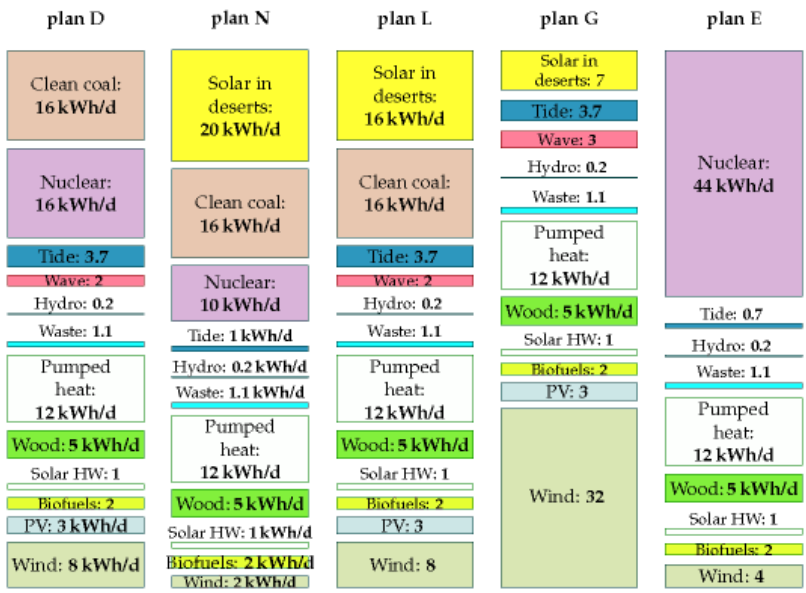

Figure 12: Five plans for UK 2050.

strategy provided the capital can be raised privately.

Electricity Interconnectors using HVDC exist between the UK and France (2 GW_e), the UK and Holland (1 GW_e) and the UK and Ireland (0.5 GW_e). Interconnection to North Africa (Via Italy?) would be necessary to exploit 'Desert Solar', to Norway for potential hydro power and pumped storage and to Iceland for geothermal power so as to maximise the usefulness and contribution of renewables. Even so its hard to see that renewables can be relied upon to supply the bulk of the UK's energy needs. (Incidently Japan following Fukushima are currently investigating their geothermal resources and the practicality of mining clatherates (methane hydride) 300 m under the sea bed surrounding Japan).

It should also be noted that large intermittent renewable energy sources present problems for electricity grids and to nuclear and fossil energy generators which in the main require steady operating conditions both for operational and financial reasons. In Germany large scale but intermittent electricity supply from wind farms in the north and PV solar installations in the south has made the operation of fossil energy generators difficult causing several companies to run at a loss.