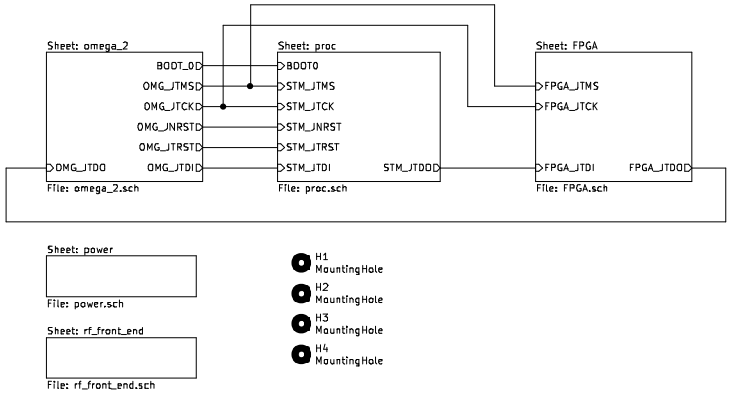

Sheet: /
File: shield_SDR_UN.sch

Title:

Size: A3	Date:	Rev:
KiCad E.D.A. kicad 6.0.0-unknown-813de6a100ubuntu18.04.1		Id: 1/6

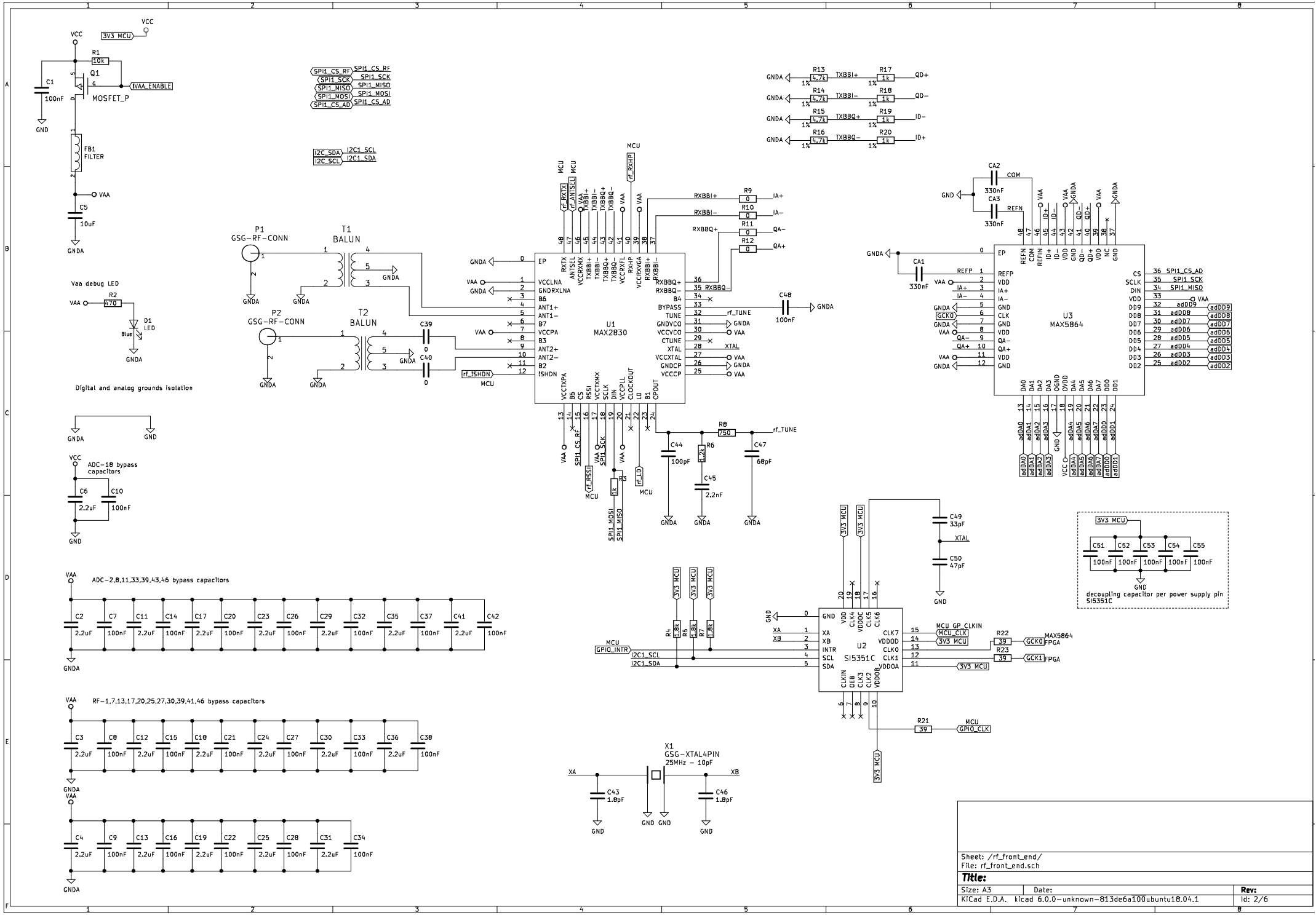

Sheet: /rf_front_end/
File: rf_front_end.sch

Title:

Size: A3	Date:	Rev:
KiCad E.D.A. kicad 6.0.0-unknown-813de6a100ubuntu18.04.1		Id: 2/6

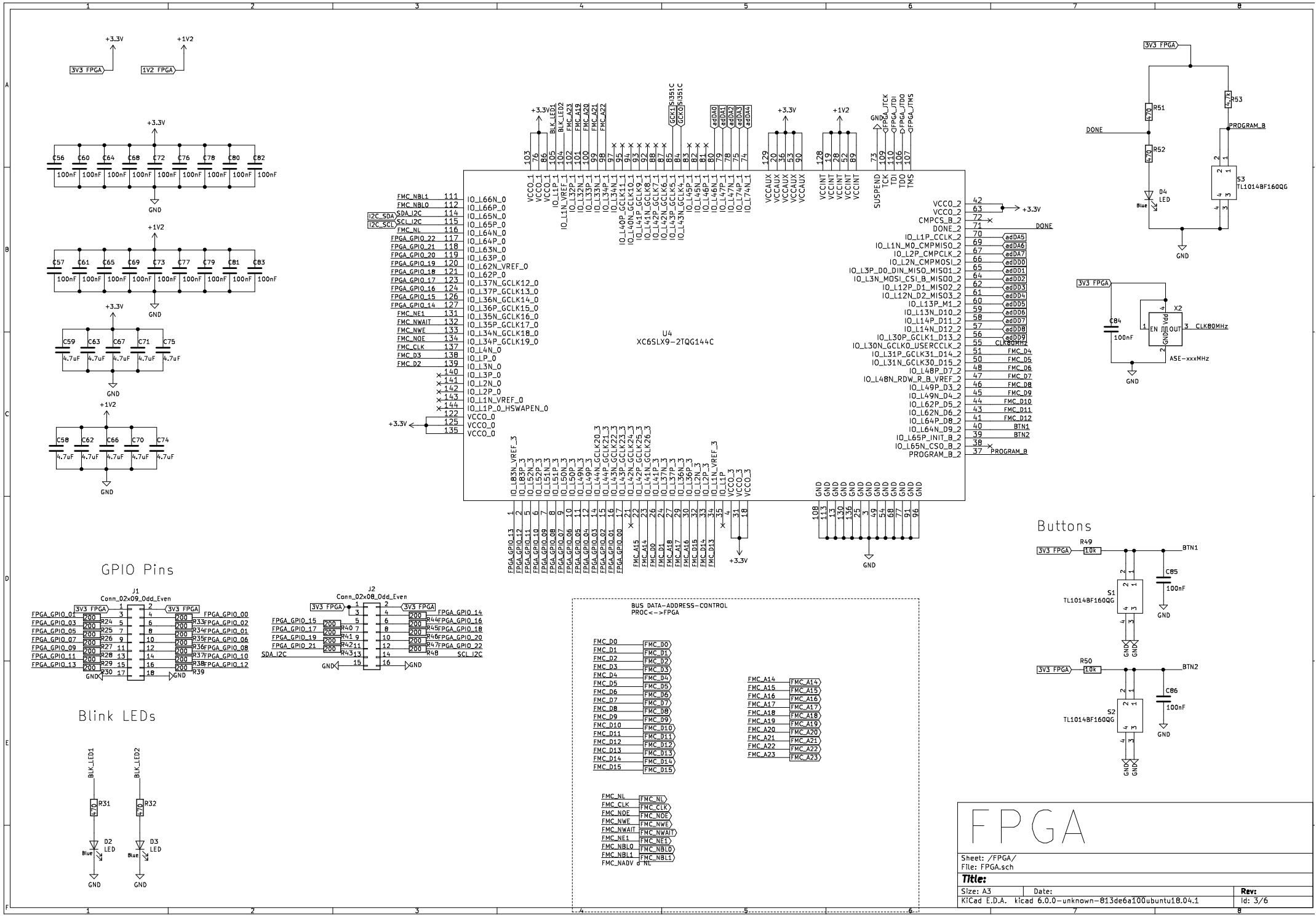
U4
XC6SLX9-2TQG144C
GPIO Pins
J1
Conn_02x09_Odd_Even
J2
Conn_02x08_Odd_Even
Blink LEDs
BLK_LED1
BLK_LED2
BUS DATA-ADDRESS-CONTROL
PROC<->FPGA
Buttons
BTN1
BTN2
S1
TL1014BF160QG
S2
TL1014BF160QG
S3
TL1014BF160QG
X2
ASE-xxxMHz
CLK80MHz
DONE
PROGRAM_B
D4
LED
Blue
FPGA
Sheet: /FPGA/
File: FPGA.sch
Title:
Size: A3
Date:
Rev:
KiCad E.D.A. kicad 6.0.0-unknown-813de6a100ubuntu18.04.1
Id: 3/6

PARA LOS PINES DE ALIMENTACION VDD / VSS
RTC Battery
BUS DATA-ADDRESS-CONTROL
PROC<->FPGA
ALTA FRECUENCIA
BAJA FRECUENCIA
STM32F7222ET
Sheet: /proc/
files proc.sch
Title:
Size: User
Date:
Rev:
KiCad E.D.A. kicad 6.0.0-unknown-813de6a100ubuntu18.04.1
Id: 4/6

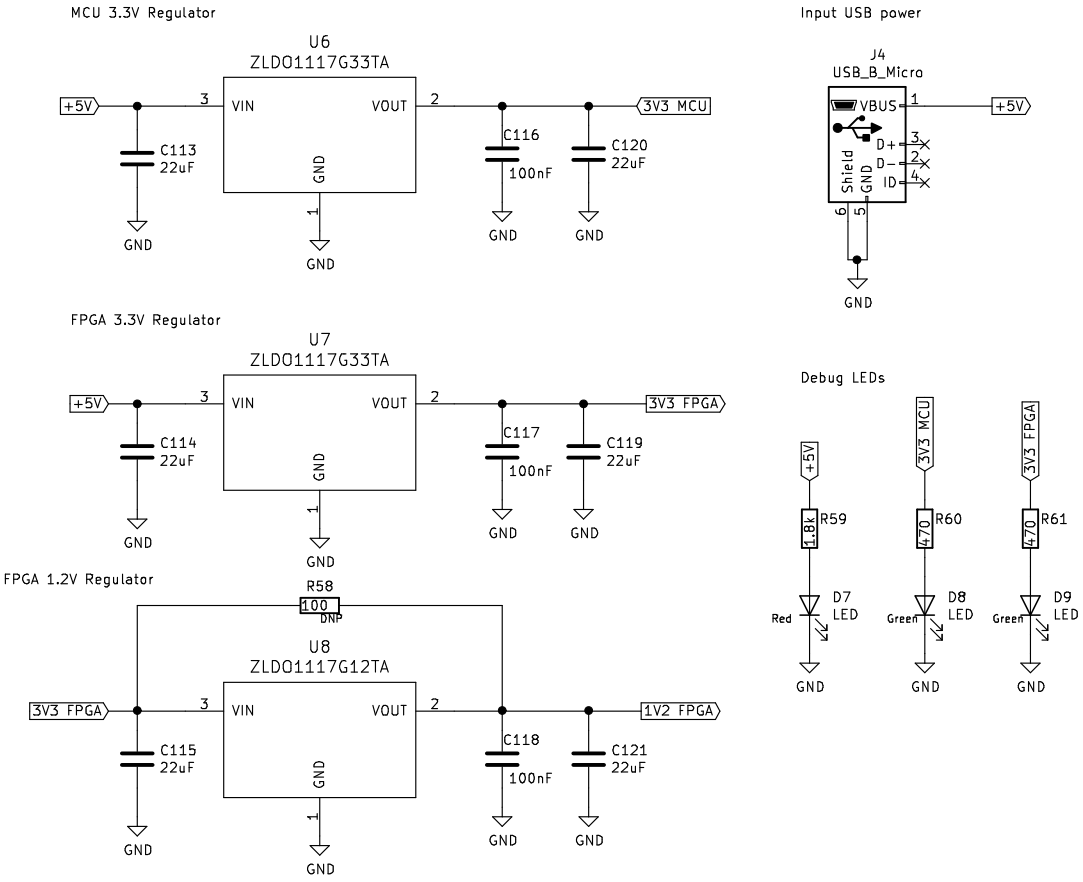

Sheet: /power/
File: power.sch

Title:

Size: A4	Date:	Rev:
KiCad E.D.A. kicad 6.0.0-unknown-813de6a100ubuntu18.04.1		Id: 5/6

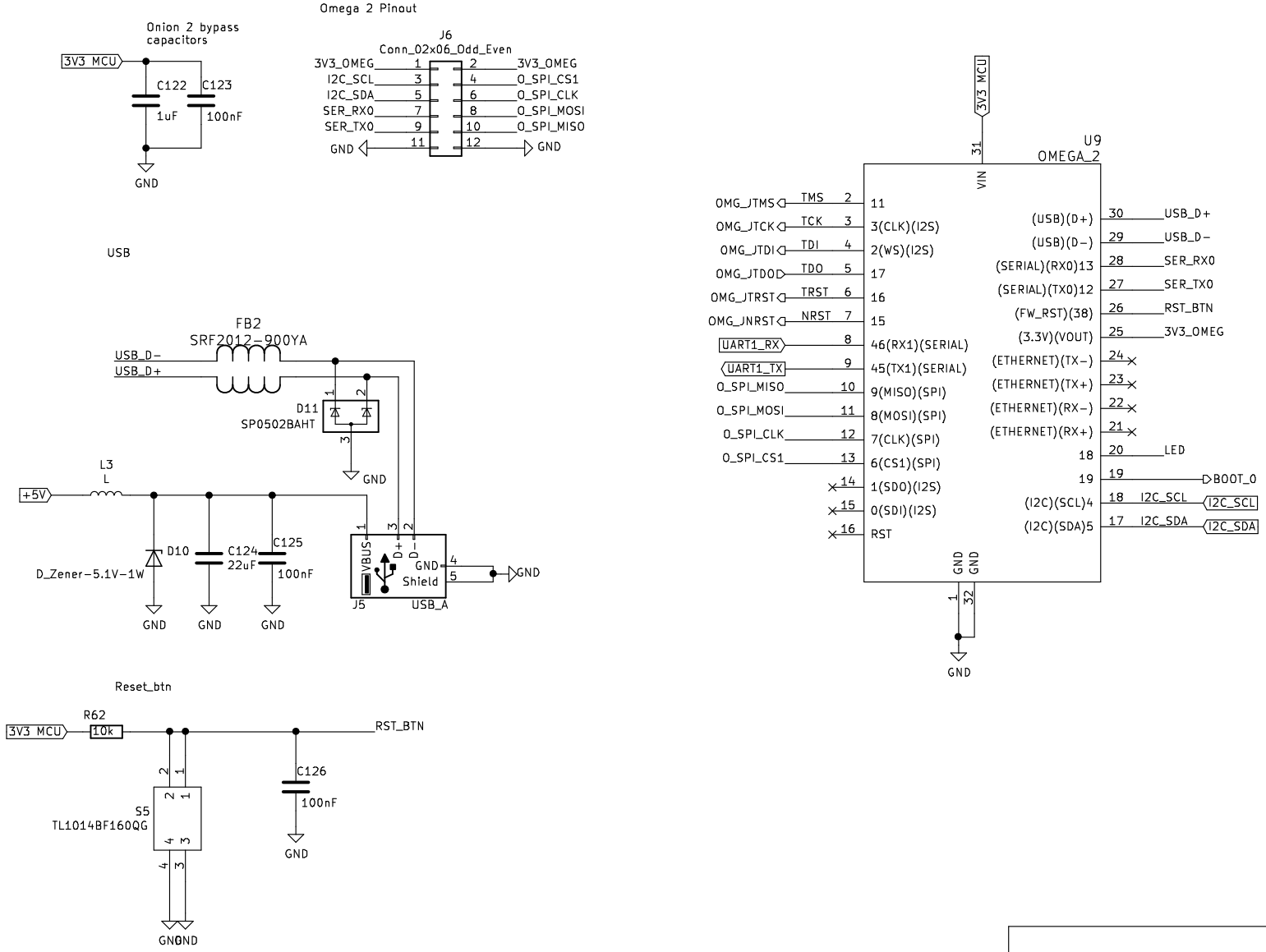

Sheet: /omega_2/
File: omega_2.sch

Title:

Size: A4	Date:	Rev:
KiCad E.D.A. kicad 6.0.0-unknown-813de6a100ubuntu18.04.1		Id: 6/6