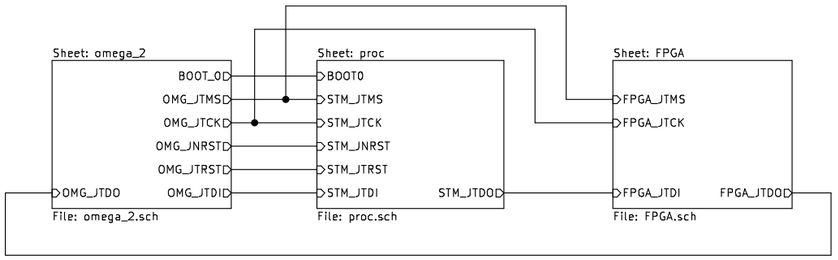

Sheet: power

File: power.sch

Sheet: rf_front_end

File: rf_front_end.sch

H1 MountingHole

H2 MountingHole

H3 MountingHole

H4 MountingHole

Sheet: /		
File: shield_SDR_UN.sch		
Title:		
Size: A3	Date:	**Rev:**
KiCad E.D.A. kicad 6.0.0-unknown-813de6a100ubuntu18.04.1		Id: 1/6

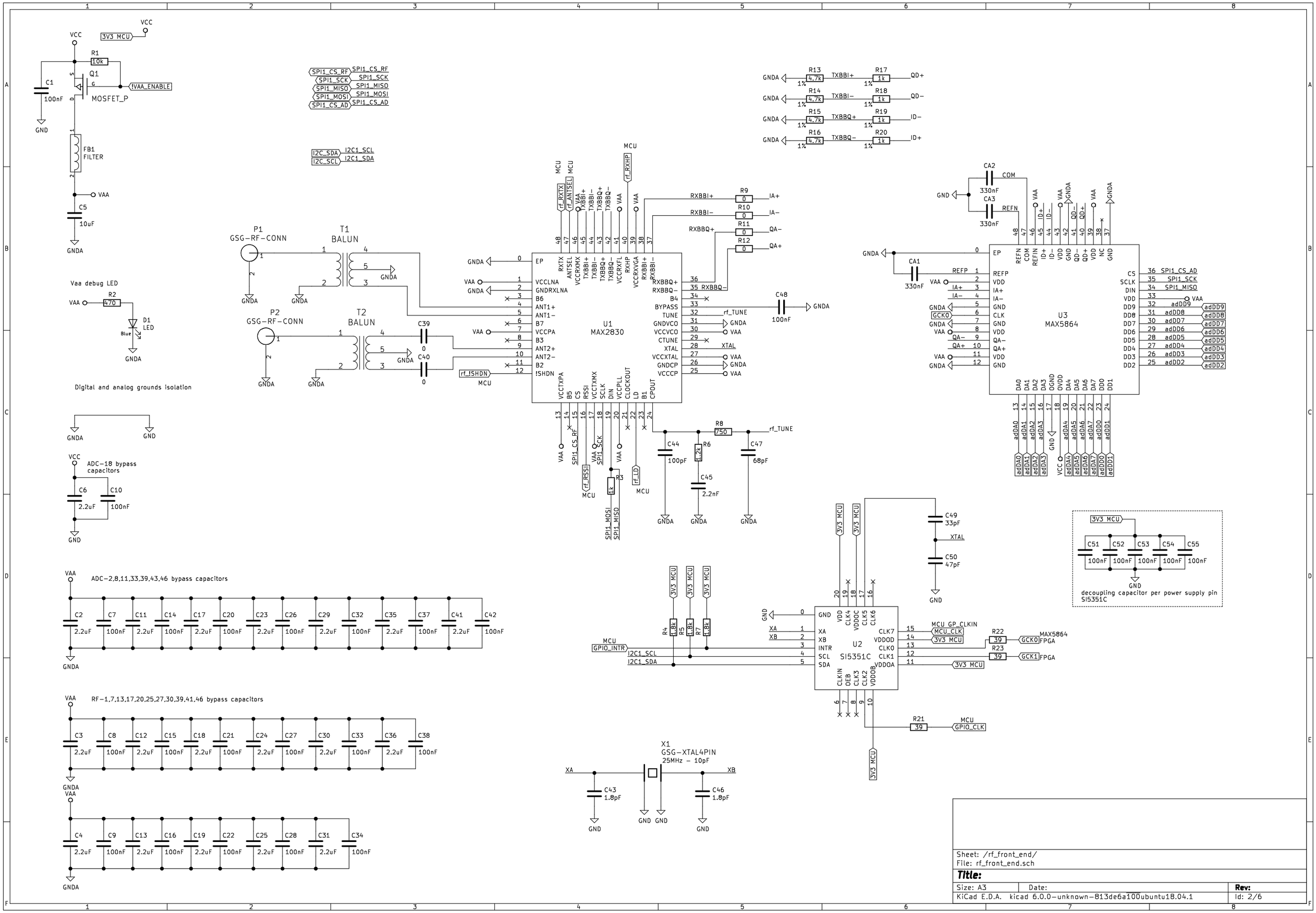
U1
MAX2830
U2
SI5351C
U3
MAX5864
P1
GSG-RF-CONN
P2
GSG-RF-CONN
T1
BALUN
T2
BALUN
X1
GSG-XTAL4PIN
25MHz - 10pF
MOSFET_P
FB1
FILTER
Vaa debug LED
Digital and analog grounds isolation
ADC-18 bypass capacitors
ADC-2,8,11,33,39,43,46 bypass capacitors
RF-1,7,13,17,20,25,27,30,39,41,46 bypass capacitors
decoupling capacitor per power supply pin
SI5351C
Sheet: /rf_front_end/
File: rf_front_end.sch
Title:
Size: A3
Date:
Rev:
KiCad E.D.A. kicad 6.0.0-unknown-813de6a100ubuntu18.04.1
Id: 2/6

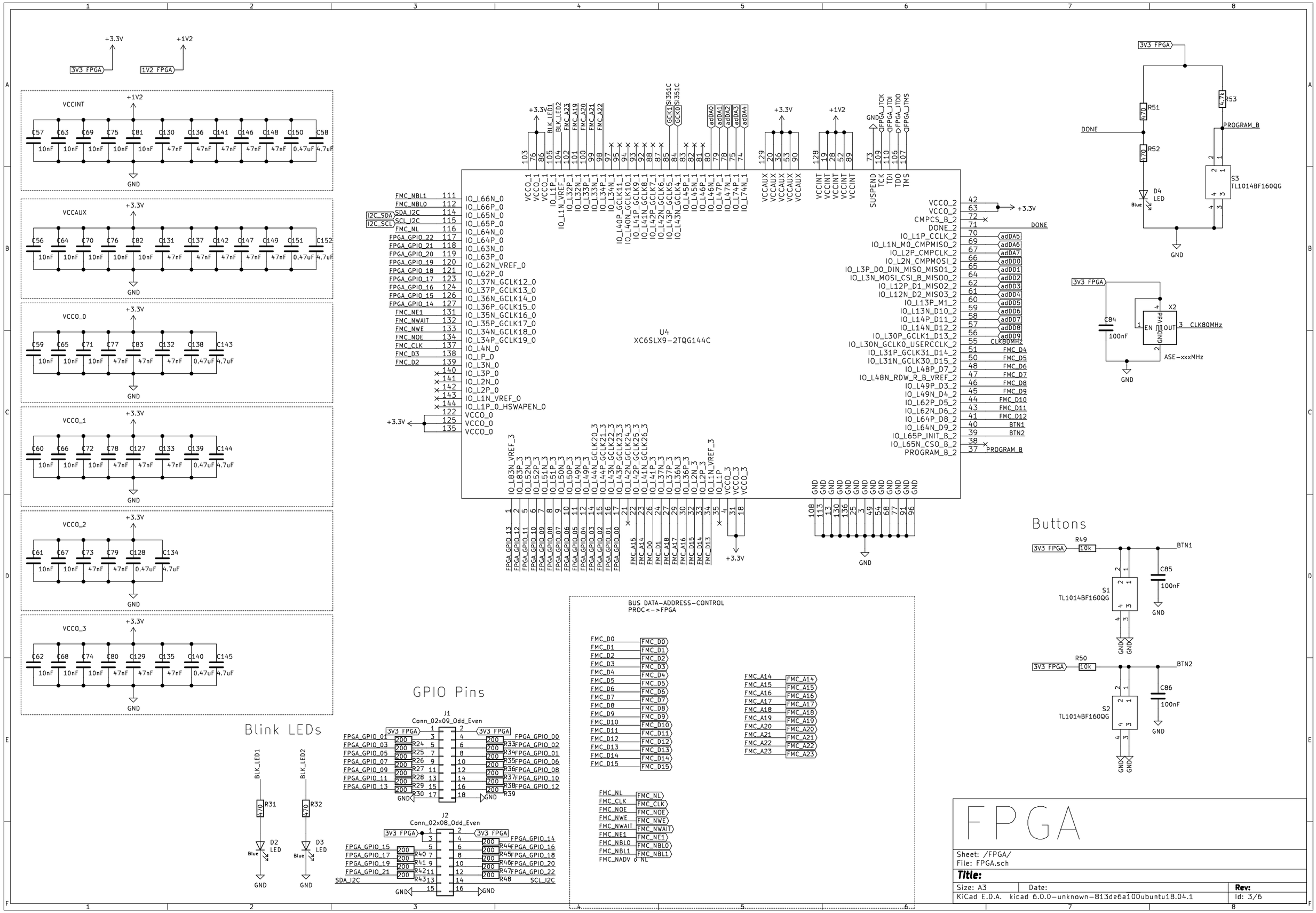
VCCINT
VCCAUX
VCCO_0
VCCO_1
VCCO_2
VCCO_3
U4
XC6SLX9-2TQG144C
GND
Blink LEDs
GPIO Pins
J1
Conn_02x09_Odd_Even
J2
Conn_02x08_Odd_Even
BUS DATA-ADDRESS-CONTROL
PROC<->FPGA
Buttons
TL1014BF160QG
ASE-xxxMHz
FPGA
Sheet: /FPGA/
File: FPGA.sch
Title:
Size: A3
Date:
Rev:
KiCad E.D.A. kicad 6.0.0-unknown-813de6a100ubuntu18.04.1
Id: 3/6

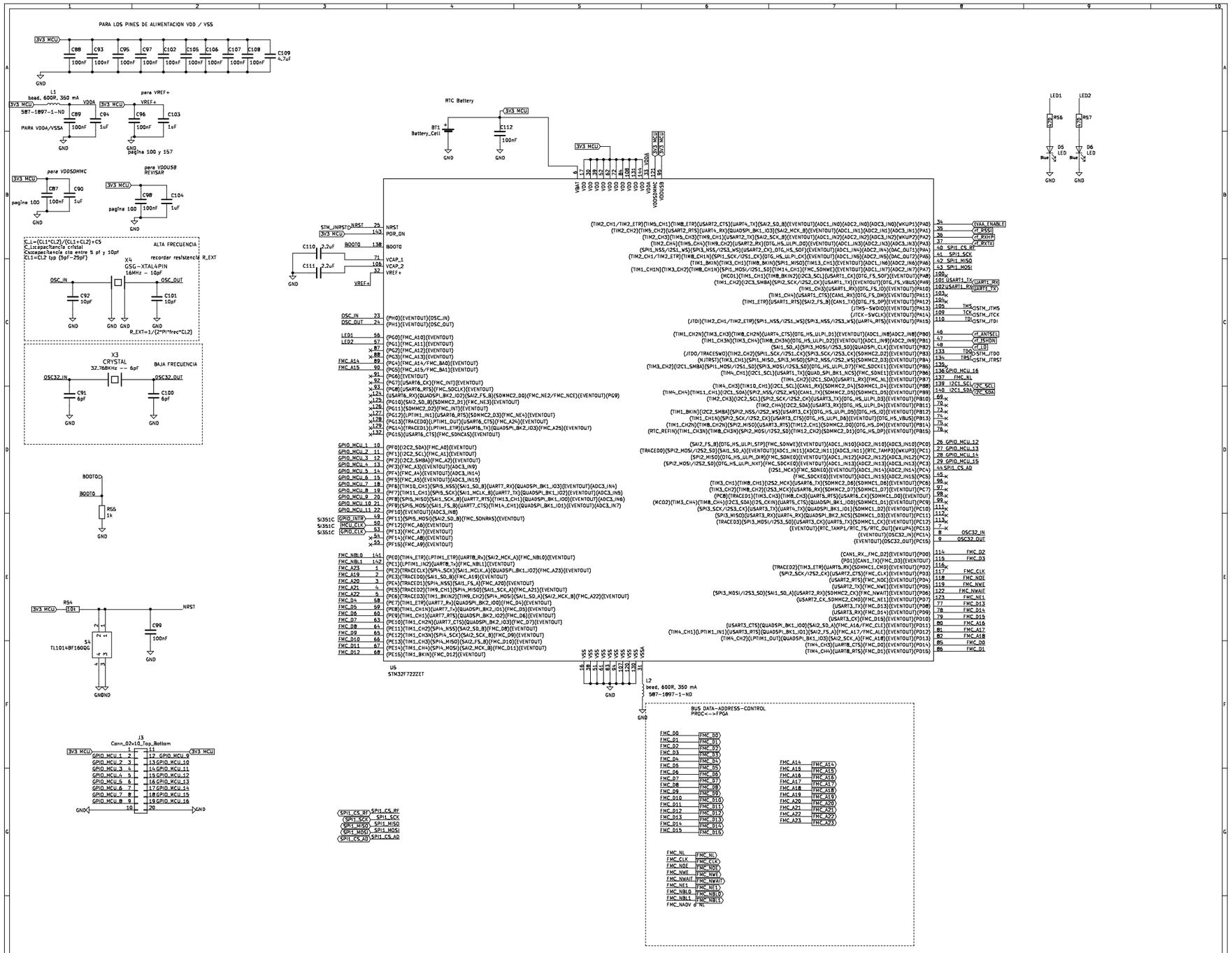

Sheet: /proc/
File: proc.sch

Title:

Size: User	Date:	Rev:
KiCad E.D.A. kicad 6.0.0-unknown-813de6a100ubuntu18.04.1		Id: 4/6

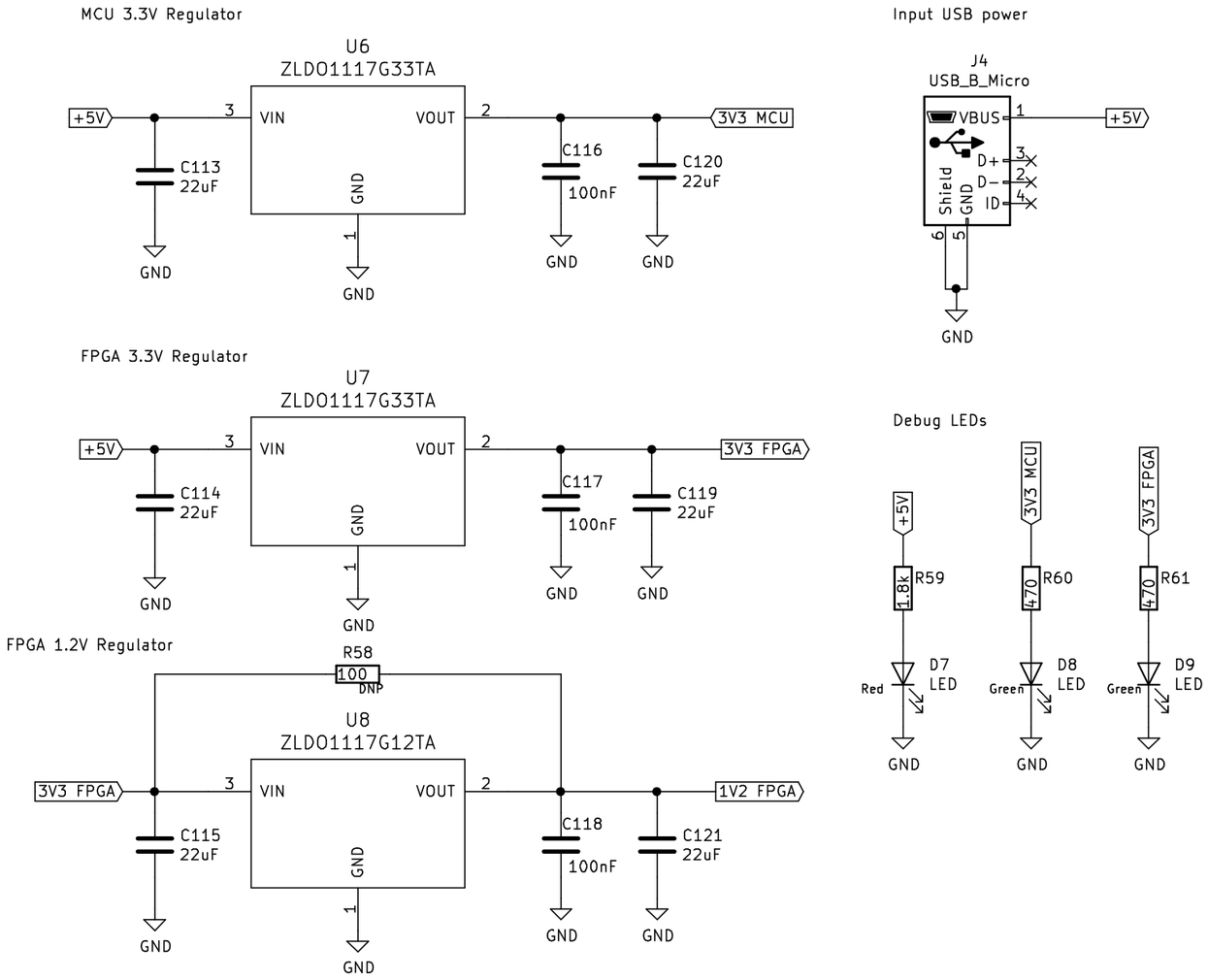

Sheet: /power/
File: power.sch

Title:

Size: A4	Date:	**Rev:**
KiCad E.D.A. kicad 6.0.0-unknown-813de6a100ubuntu18.04.1		Id: 5/6

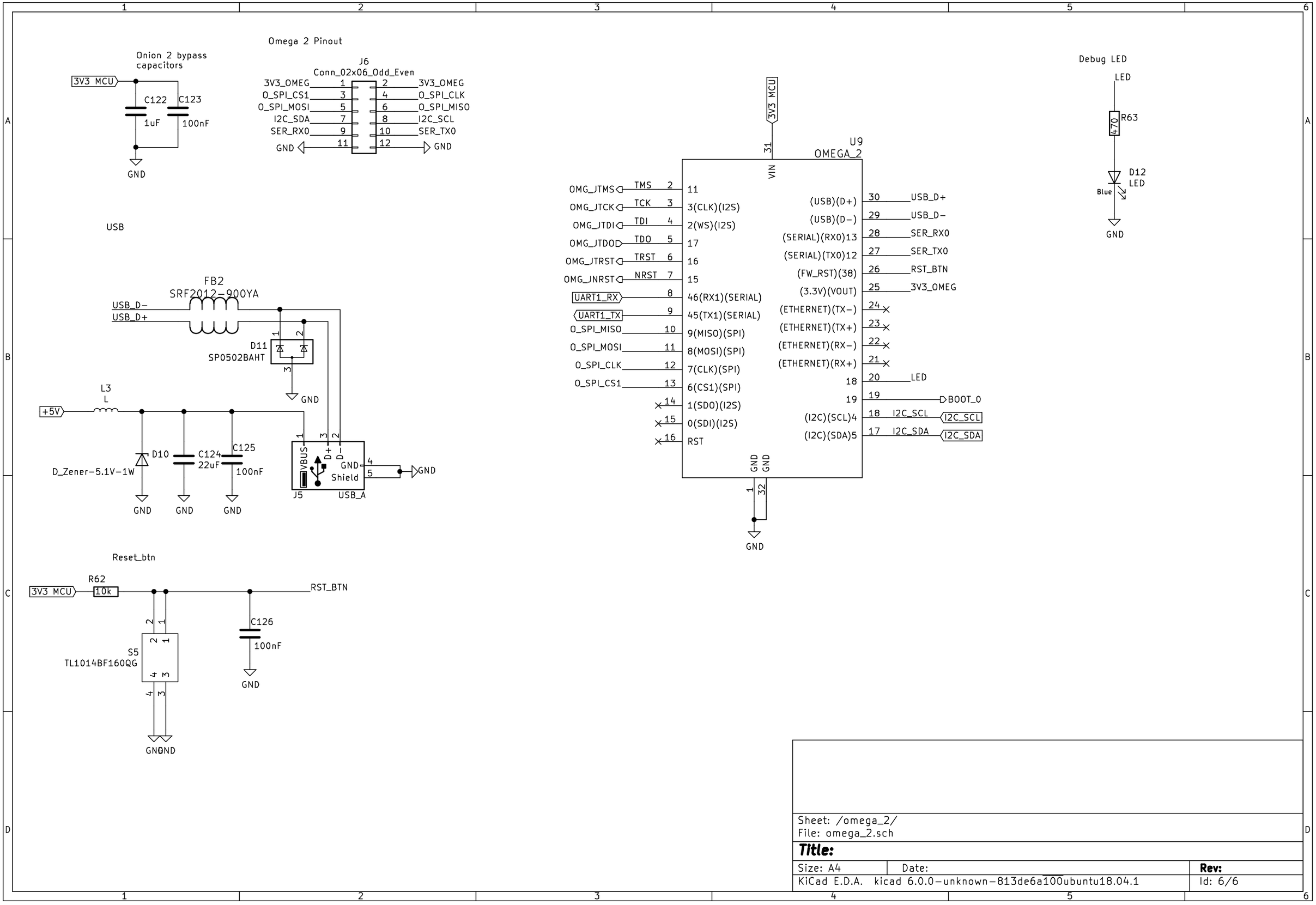

Sheet: /omega_2/
File: omega_2.sch

Title:

Size: A4	Date:	Rev:
KiCad E.D.A. kicad 6.0.0−unknown−813de6a100ubuntu18.04.1		Id: 6/6