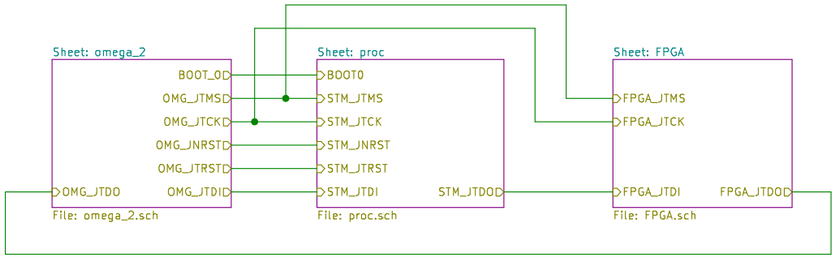

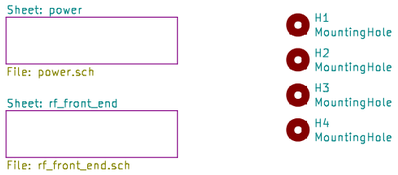

Sheet: /
File: shield_SDR_UN.sch

Title:

Size: A3	Date:	Rev:
KiCad E.D.A. kicad 6.0.0-unknown-813de6a100ubuntu18.04.1		Id: 1/6

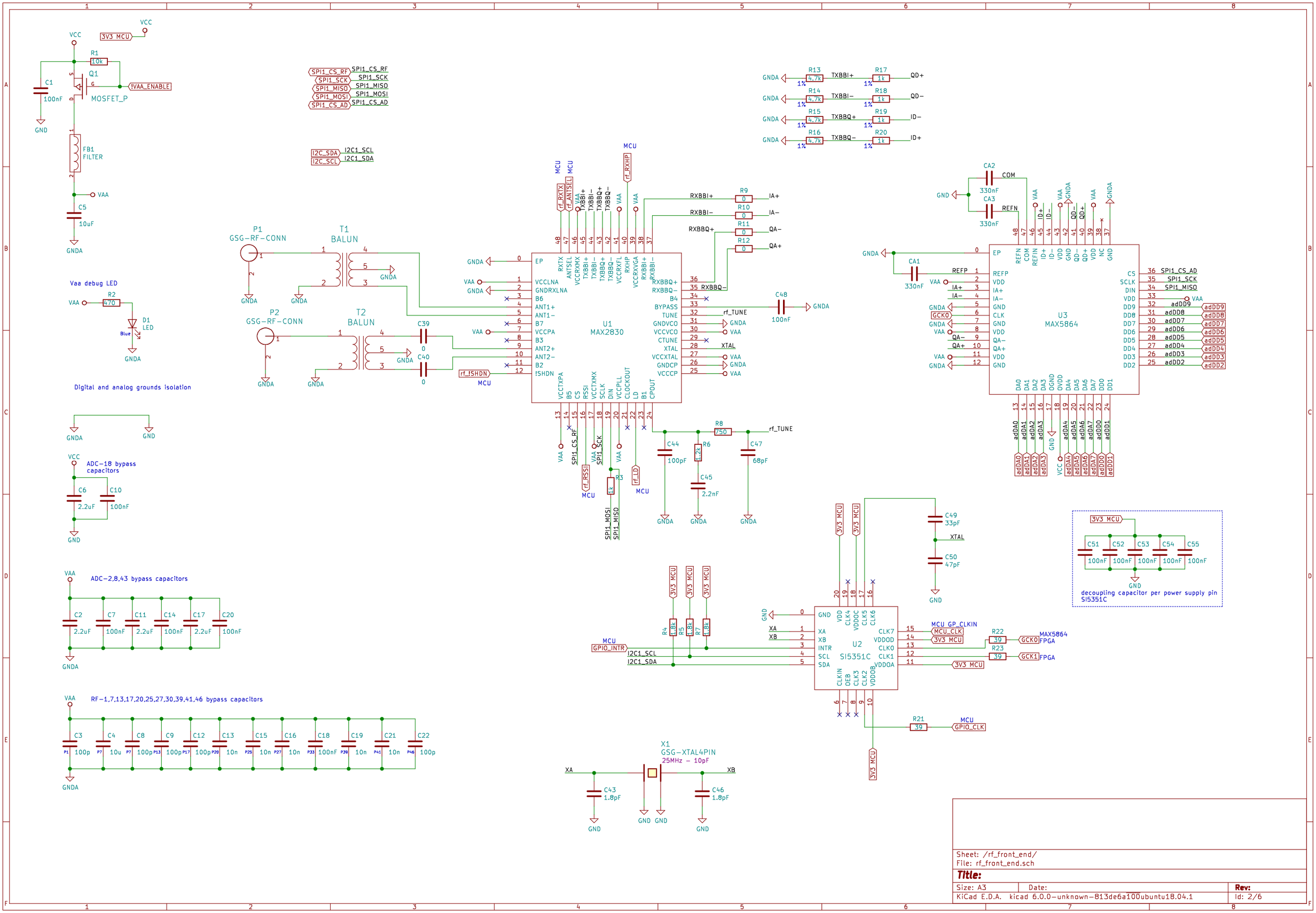

Sheet: /rf_front_end/
File: rf_front_end.sch

Title:

Size: A3	Date:	Rev:
KiCad E.D.A. kicad 6.0.0-unknown-813de6a100ubuntu18.04.1		Id: 2/6

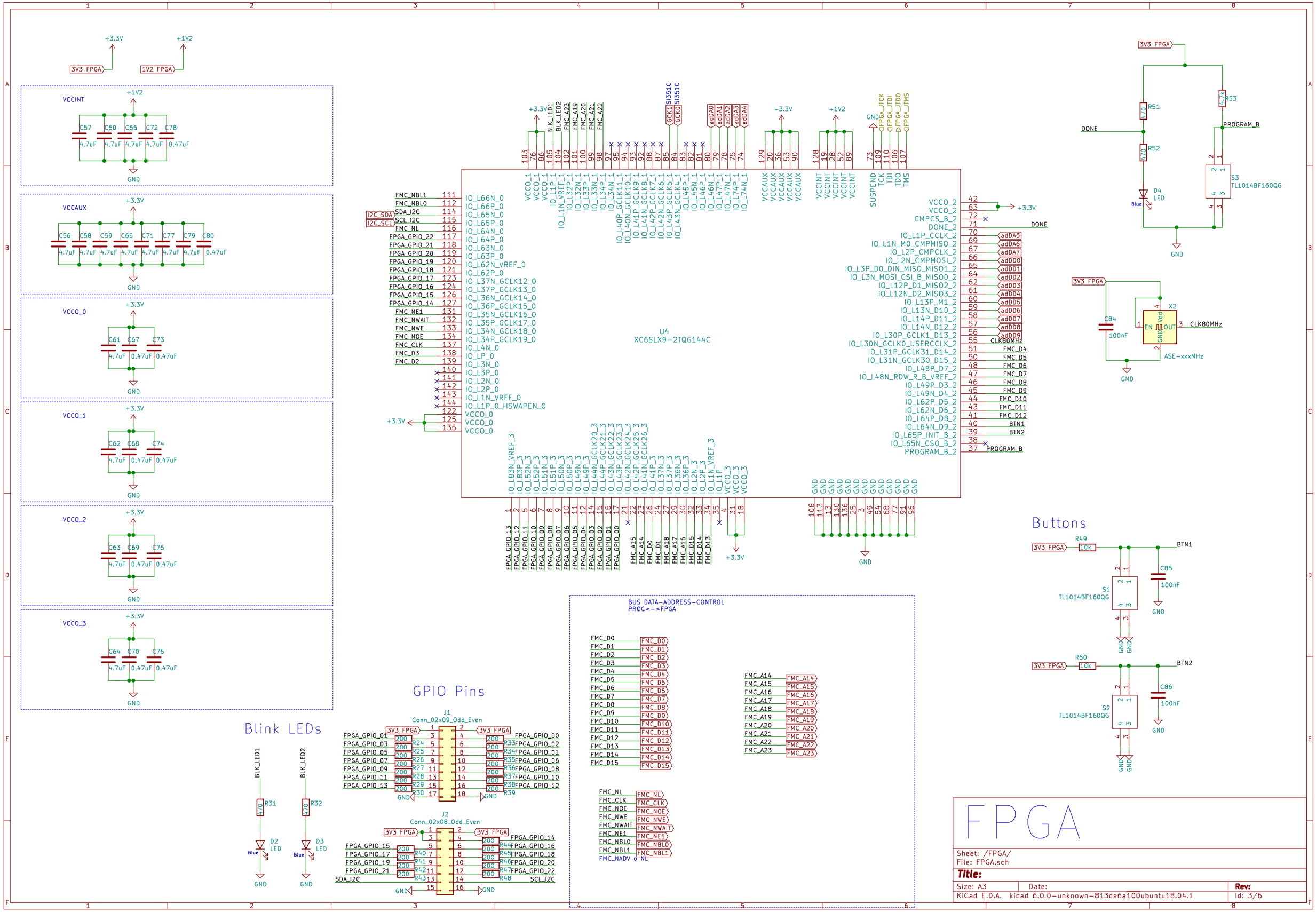
VCCINT
VCCAUX
VCCO_0
VCCO_1
VCCO_2
VCCO_3
U4
XC6SLX9-2TQG144C
Buttons
GPIO Pins
Blink LEDs
BUS DATA-ADDRESS-CONTROL
PROC<->FPGA
FPGA
Sheet: /FPGA/
File: FPGA.sch
Title:
Size: A3
Date:
Rev:
KiCad E.D.A. kicad 6.0.0-unknown-813de6a100ubuntu18.04.1
Id: 3/6

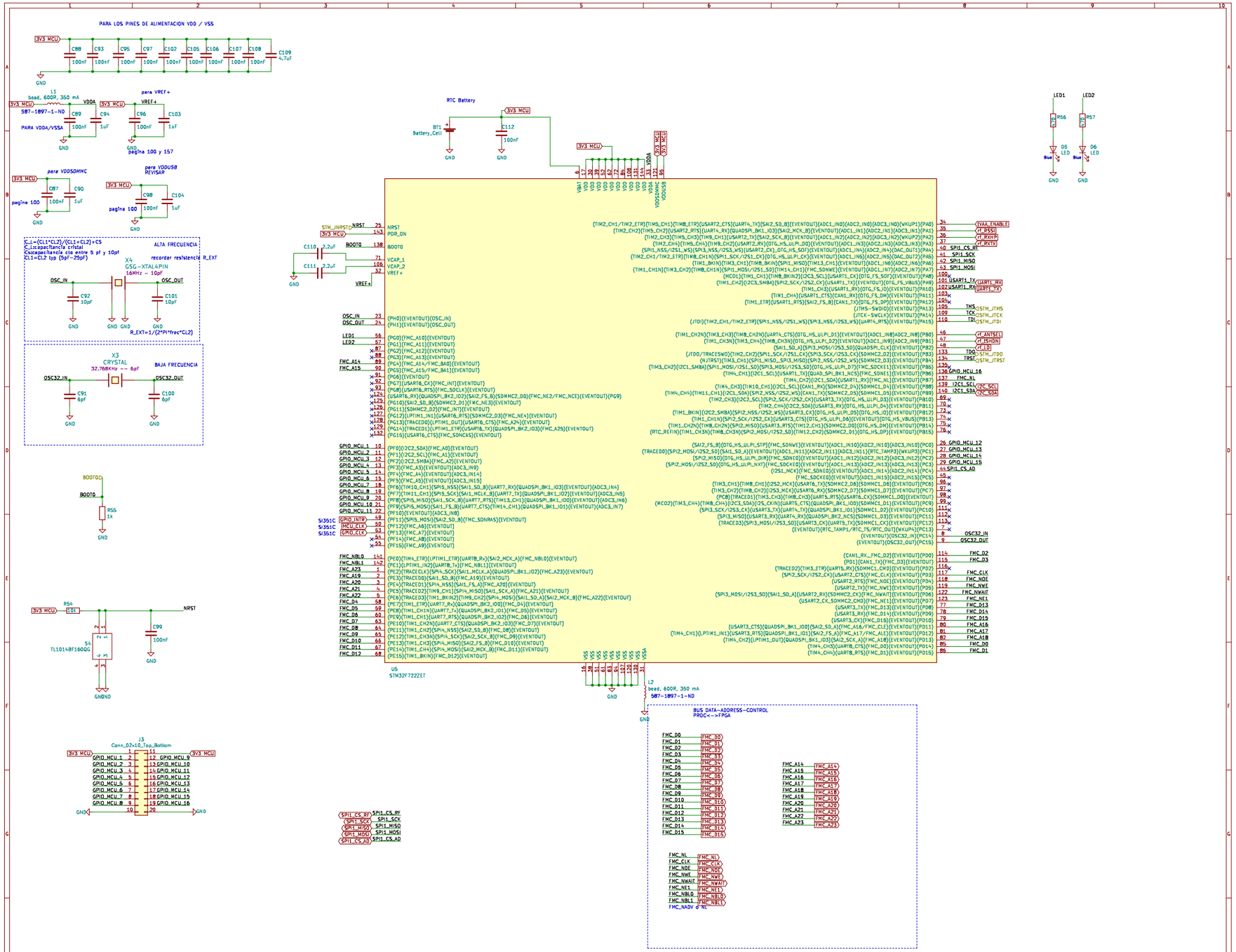

Sheet: /proc/
File: proc.sch

Title:

Size: User	Date:	Rev:
KiCad E.D.A. kicad 6.0.0-unknown-813de6a100ubuntu18.04.1		Id: 4/6

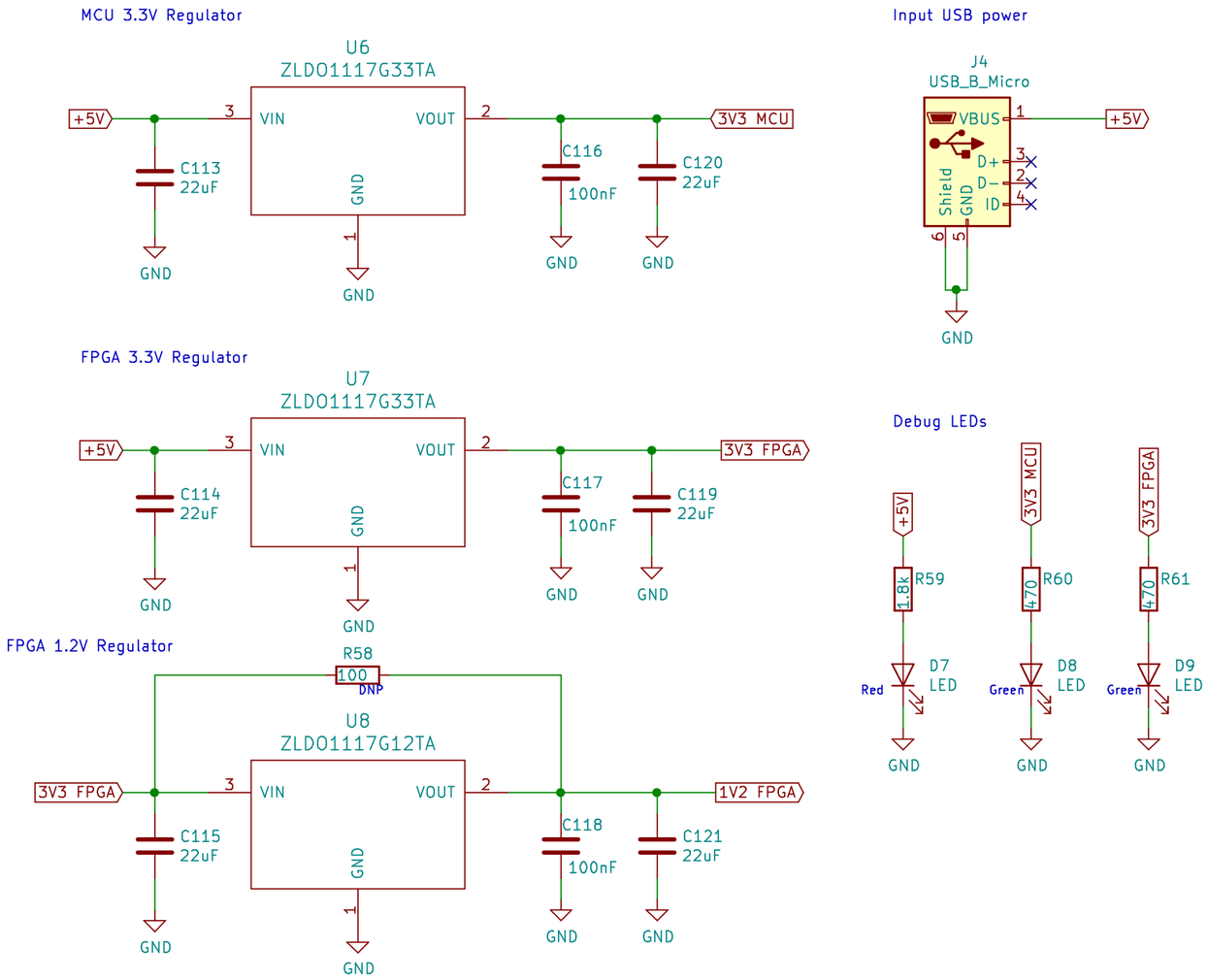

Sheet: /power/
File: power.sch

Title:

Size: A4	Date:	Rev:
KiCad E.D.A. kicad 6.0.0-unknown-813de6a100ubuntu18.04.1		Id: 5/6

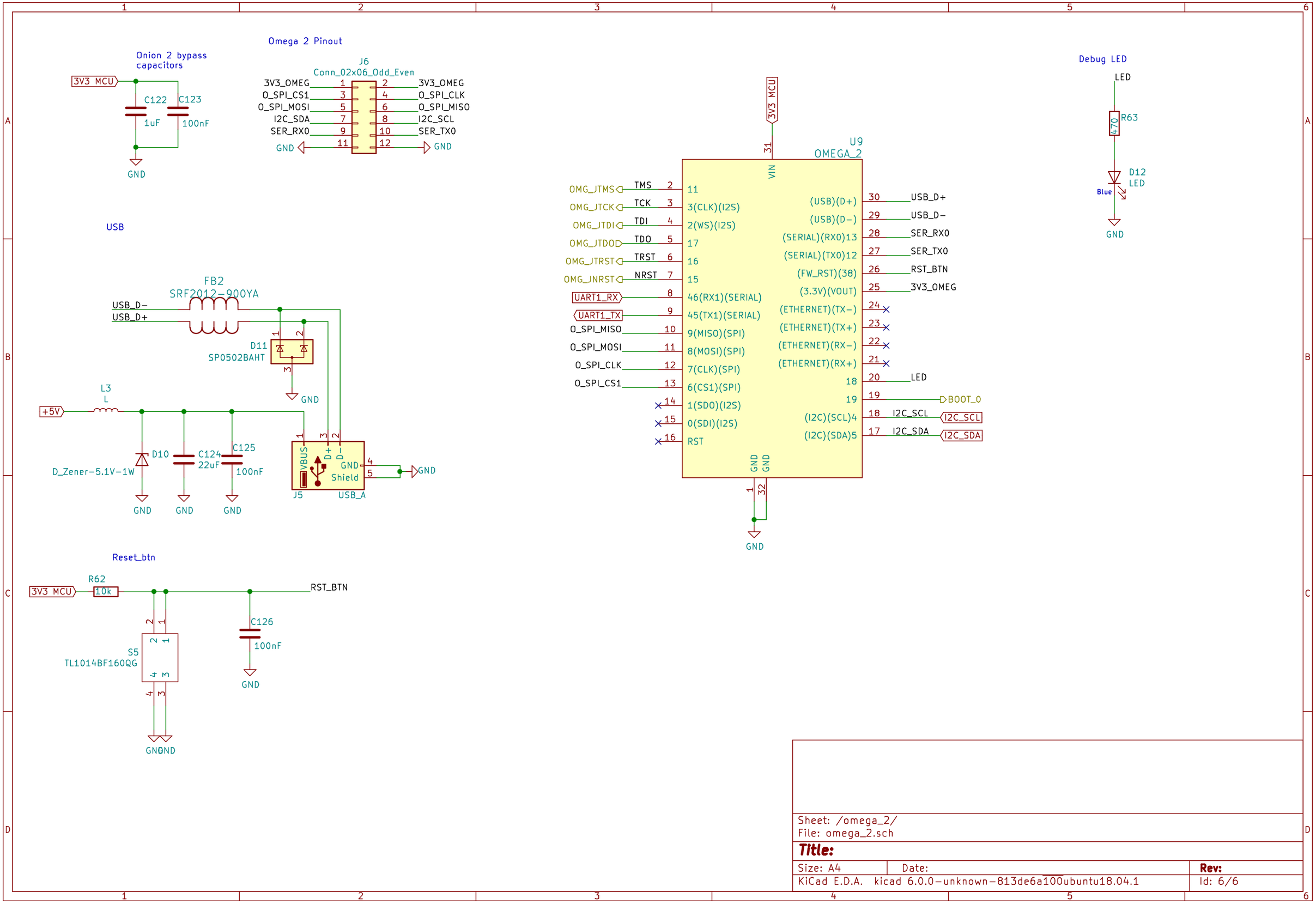

Sheet: /omega_2/
File: omega_2.sch

Title:

Size: A4	Date:	Rev:
KiCad E.D.A. kicad 6.0.0-unknown-813de6a100ubuntu18.04.1		Id: 6/6