Example 3: What is the impedance of a series circuit consisting of a capacitor with a capacitive reactance of 7 ohms, an inductor with an inductive reactance of 10 ohms, and a resistor with a resistance of 4 ohms? *[Figure 9-27]*

Solution:

$$Z = \sqrt{R^2 + (X_L - X_C)^2}$$

$$Z = \sqrt{4^2 + (10 - 7)^2}$$

$$Z = \sqrt{25}$$

$$Z = 5\Omega$$

To find total current:

$$I_T = \frac{E_T}{Z}$$

$$I_T = \frac{110V}{5\Omega}$$

$$I_T = 22 \text{ amps}$$

Remember that inductive and capacitive reactances can cause a phase shift between voltage and current. In this example, inductive reactance is larger than capacitive reactance, so the voltage leads current.

It should be noted that since inductive reactance, capacitive reactance, and resistance affect each other at right angles, the voltage drops of any series AC circuit should be added using vector addition. *Figure 9-28* shows the voltage drops over the series AC circuit described in example 3 above.

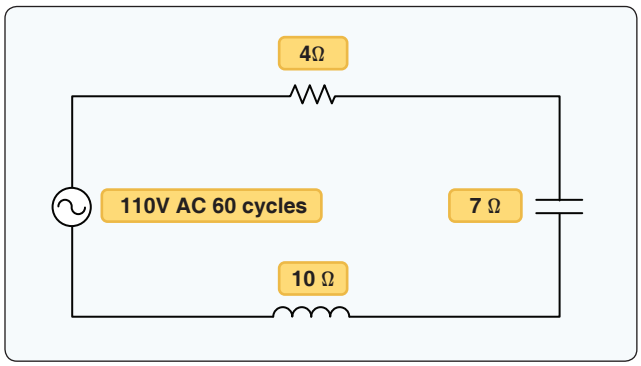

Figure 9-27. *A circuit containing resistance, inductance, and capacitance.*

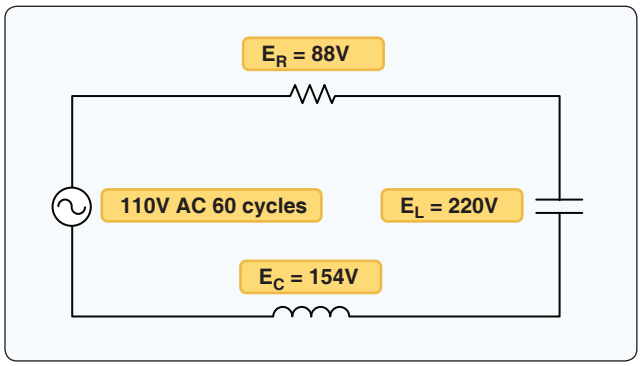

Figure 9-28. *Voltage drops.*

To calculate the individual voltage drops, simply use the equations:

$$E_R = I \times R$$

$$E_{X_L} = I \times X_L$$

$$E_{X_C} = I \times X_C$$

To determine the total applied voltage for the circuit, each individual voltage drop must be added using vector addition.

$$E_T = \sqrt{E_R^2 + (E_L - E_C)^2}$$

$$E_T = \sqrt{88^2 + (220 - 154)^2}$$

$$E_T = \sqrt{88^2 + 66^2}$$

$$E_T = \sqrt{12{,}100}$$

$$E_T = 110 \text{ volts}$$

Parallel AC Circuits

When solving parallel AC circuits, one must also use a derivative of the Pythagorean Theorem. The equation for finding impedance in an AC circuit is as follows:

$$Z = \sqrt{\left(\frac{1}{R}\right)^2 + \left(\frac{1}{X_L} - \frac{1}{X_C}\right)^2}$$

To determine the total impedance of the parallel circuit shown in *Figure 9-29*, one would first determine the capacitive and inductive reactances. (Remember to convert microfarads to farads.)