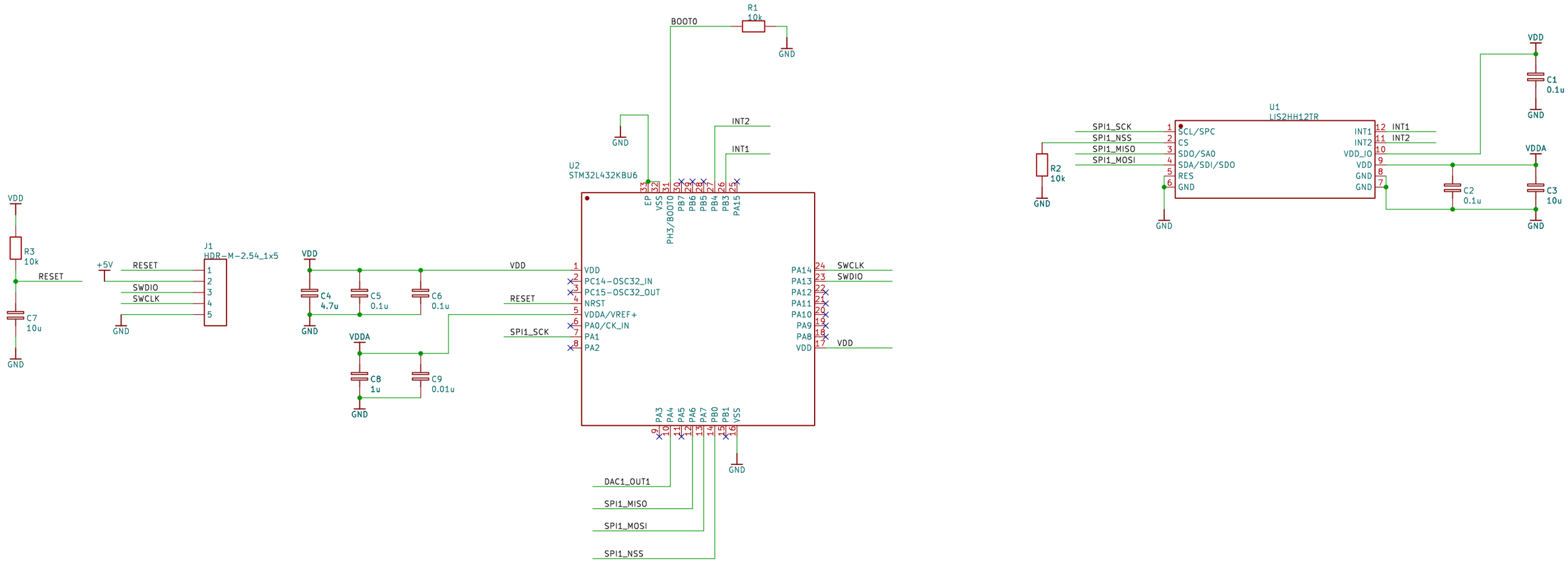
R1
10k
BOOT0
GND
U2
STM32L432KBU6
INT2
INT1
VDD
R3
10k
RESET
C7
10u
J1
HDR-M-2.54_1x5
+5V
SWDIO
SWCLK
C4
4.7u
C5
0.1u
C6
0.1u
VDDA
C8
1u
C9
0.01u
PC14-OSC32_IN
PC15-OSC32_OUT
NRST
VDDA/VREF+
PA0/CK_IN
PA1
PA2
SPI1_SCK
PA14
PA13
PA12
PA11
PA10
PA9
PA8
PA3
PA4
PA5
PA6
PA7
PB0
PB1
VSS
DAC1_OUT1
SPI1_MISO
SPI1_MOSI
SPI1_NSS
U1
LIS2HH12TR
SCL/SPC
CS
SDO/SA0
SDA/SDI/SDO
RES
INT1
INT2
VDD_IO
R2
10k
C1
0.1u
C2
0.1u
C3
10u
U3
TLV70450DBVR
IN
OUT
NC
C10
1u
C11
1u
U5
TPS7A0325PDBVR
EN
C12
1u
C13
1u
U4
TPS7A0325PDBVR
C14
1u
C15
1u
R4
330K
R6
100K
R9
62 0.1%
R5
1K
R7
3.3K
U7
OPA2244UA/2K5
C23
0.01u
C24
0.1u
R8
10K
Q2
PXT2222A,115
R10
10 0.1%
C26
0.1u
MB6F_C114016
D3
C25
0.1u
D2
SMAJ36CA_C83266
loop+
loop-
P1
WJ500V-5.08-2P-14-00A