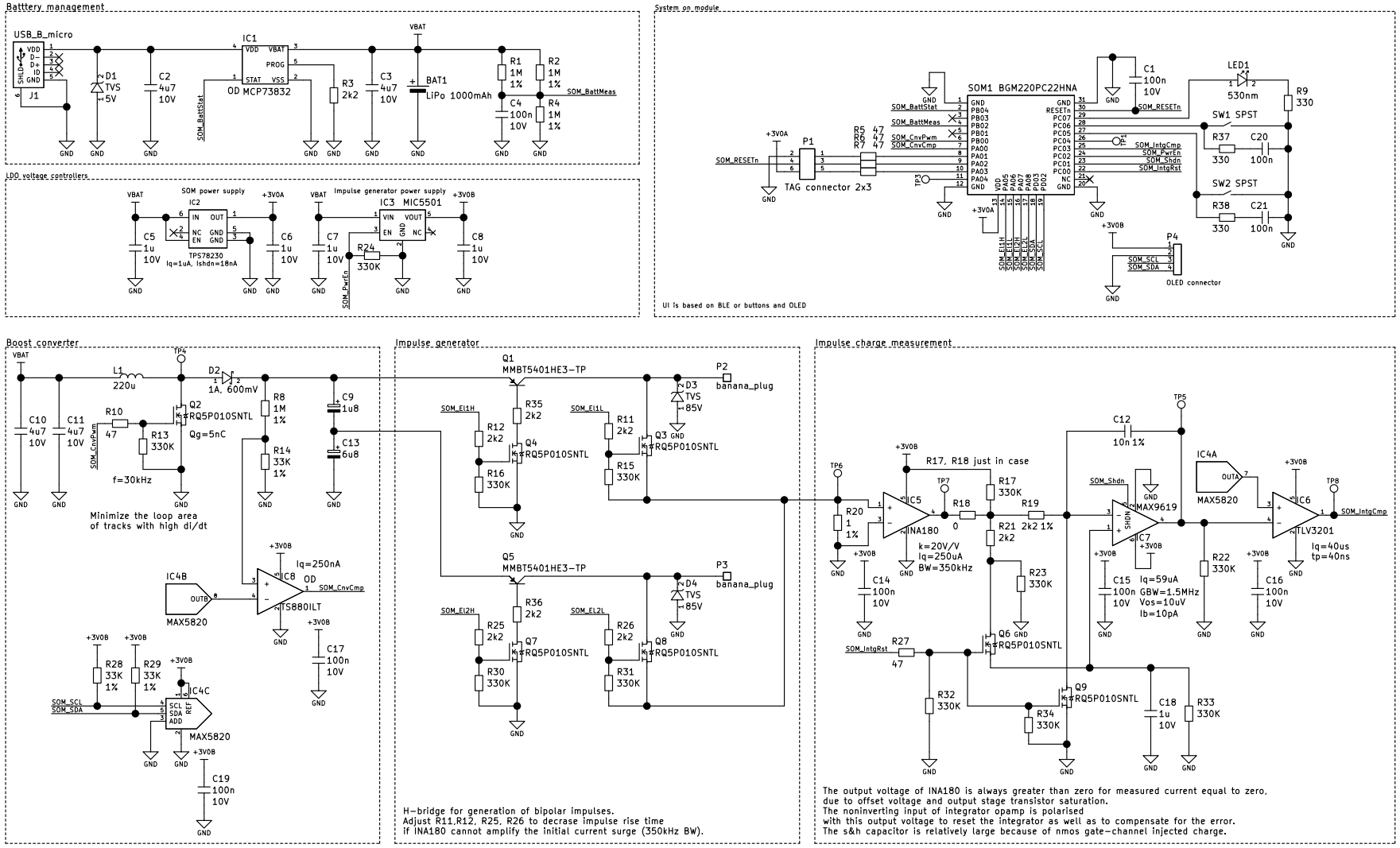

Wiktor Lechowicz

Sheet: /

File: EMS_stimulator.sch

Title: EMS stimulator

Size: A4	Date: 2021-10-07	**Rev: 1.0**
KiCad E.D.A. kicad (5.1.8)-1		Id: 1/1