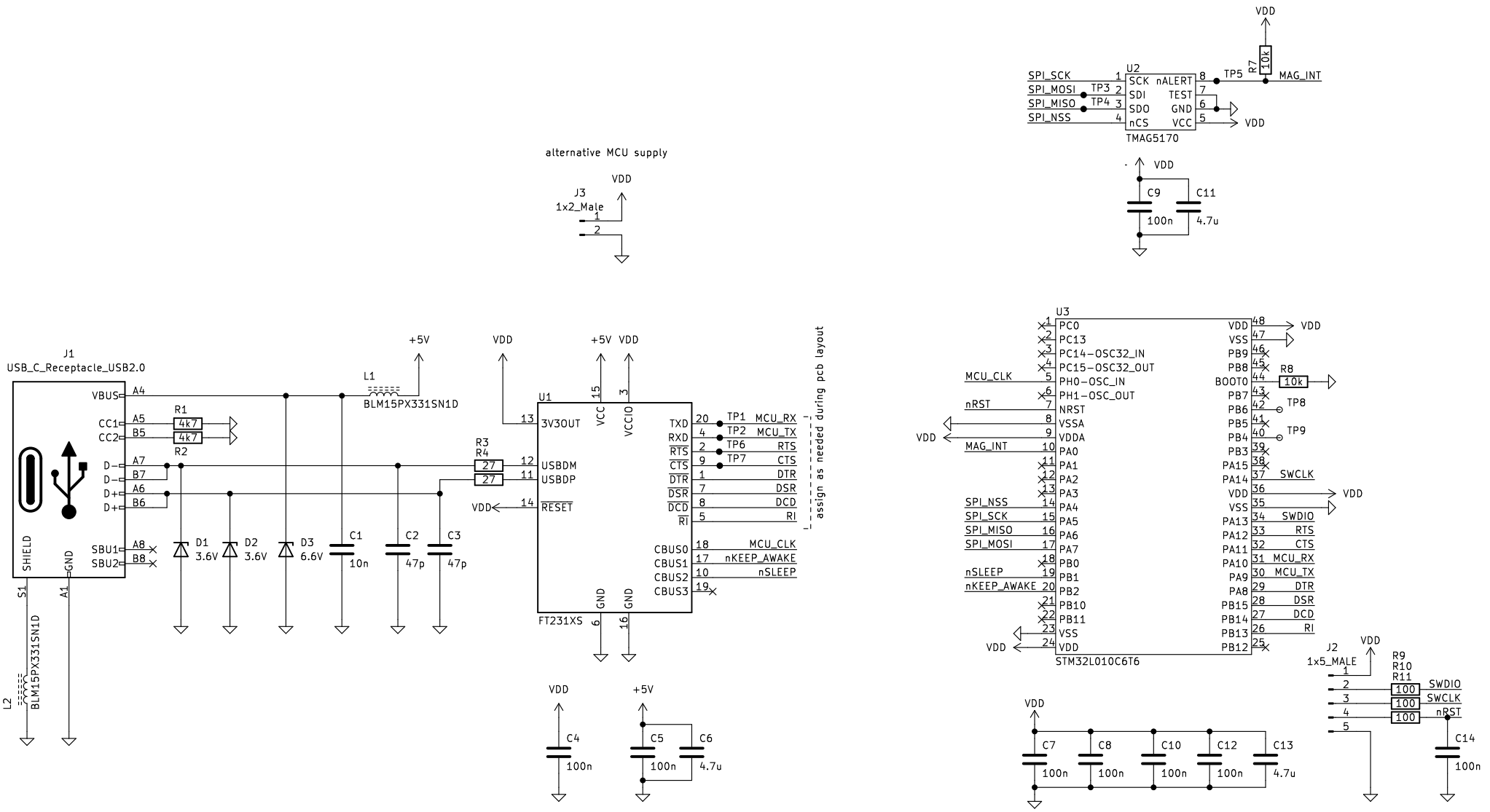

Wiktor Lechowicz
AGH

Sheet: /
File: usb−magnetometer.kicad_sch

Title: USB magnetometer

Size: A4	Date: 2022−11−01	**Rev: 1.0**
KiCad E.D.A. eeschema (6.0.1)		Id: 1/1