Link-Based Implementations

Chapter 4

Preliminaries

- Another way to organize data items
  - Place them within objects—usually called nodes
  - Linked together into a "chain," one after

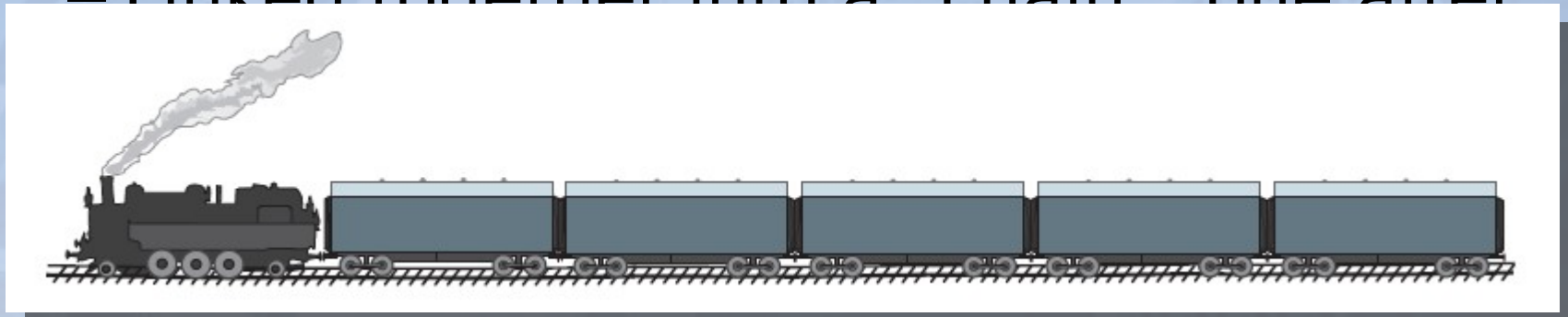

Figure 4-1 A freight train

Preliminaries

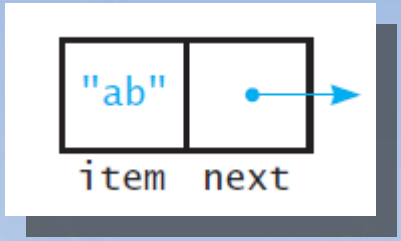

FIGURE 4-2 A node

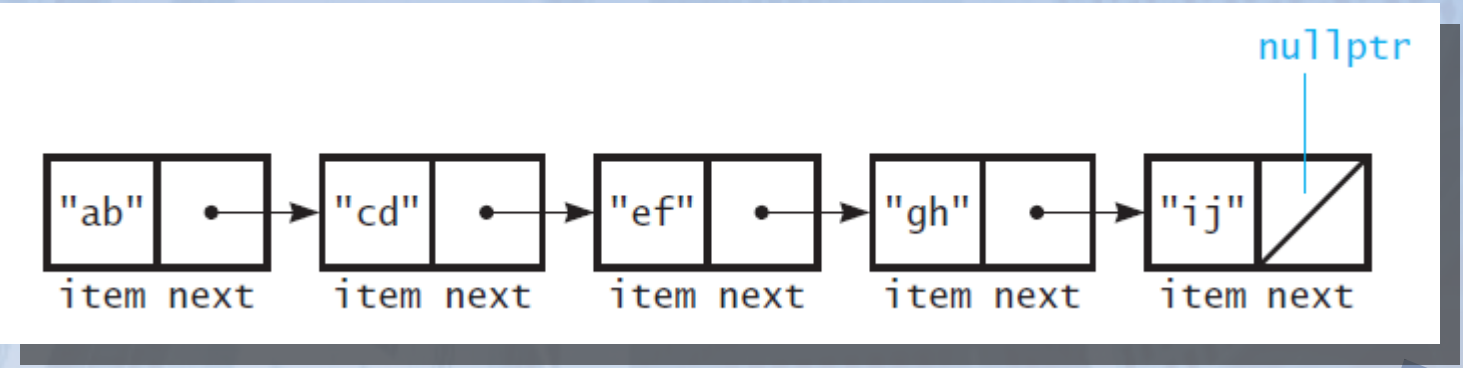

FIGURE 4-3 Several nodes linked together

Preliminaries

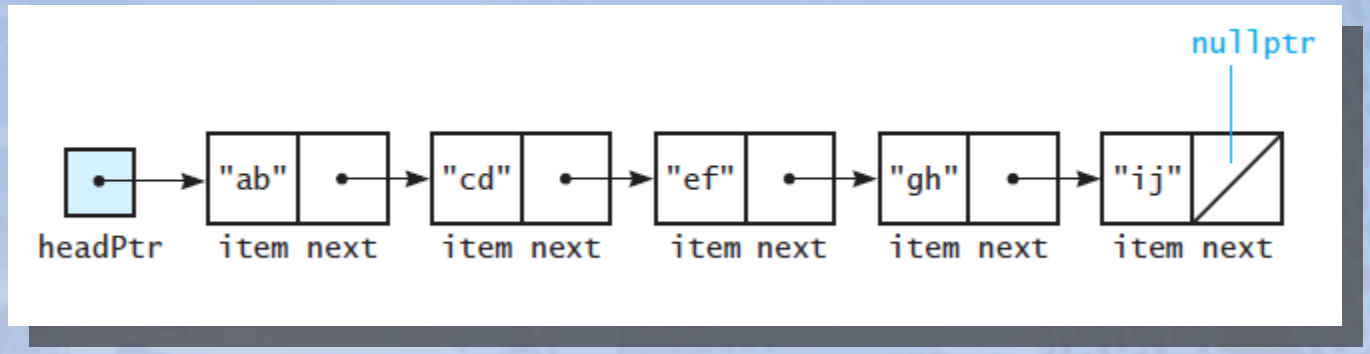

FIGURE 4-4 A head pointer to the first of several linked nodes

Preliminaries

```
headPtr = new Node<std::string>();
```

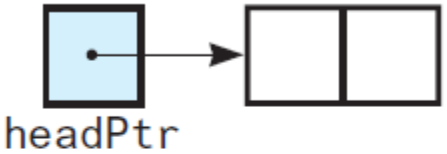


```
headPtr = nullptr;
```

FIGURE 4-5 A lost node

The Class Node

```
/** @file Node.h */

#ifndef NODE_
#define NODE_

template<class ItemType>
class Node
{
private:
   ItemType        item; // A data item
   Node<ItemType>* next; // Pointer to next node
public:
   Node();
   Node(const ItemType& anItem);
   Node(const ItemType& anItem, Node<ItemType>* nextNodePtr);
   void setItem(const ItemType& anItem);
   void setNext(Node<ItemType>* nextNodePtr);
   ItemType getItem() const;
   Node<ItemType>* getNext() const;
}; // end Node
#include "Node.cpp"
#endif
```

LISTING 4-1 The header file for the template class Node

The Class Node

```
/** @file Node.cpp */
#include "Node.h"
#include <cstddef>
template<class ItemType>
Node<ItemType>::Node() : next(nullptr)
{
}  // end default constructor

template<class ItemType>
Node<ItemType>::Node(const ItemType& anItem) : item(anItem), next(nullptr)
{
}  // end constructor

template<class ItemType>
Node<ItemType>::Node(const ItemType& anItem, Node<ItemType>* nextNodePtr) :
                     item(anItem), next(nextNodePtr)
{
}  // end constructor

template<class ItemType>
void Node<ItemType>::setItem(const ItemType& anItem)
{
```

LISTING 4-2 The implementation fi le for the class Node

The Class Node

```
template<class ItemType>
void Node<ItemType>::setItem(const ItemType& anItem)
{
   item = anItem;
}  // end setItem

template<class ItemType>
void Node<ItemType>::setNext(Node<ItemType>* nextNodePtr)
{
   next = nextNodePtr;
}  // end setNext

template<class ItemType>
ItemType Node<ItemType>::getItem() const
{
   return item;
}  // end getItem

template<class ItemType>
Node<ItemType>* Node<ItemType>::getNext() const
{
   return next;
}  // end getNext
```

LISTING 4-2 The implementation file for the class Node

A Link-Based Implementation of the ADT Bag

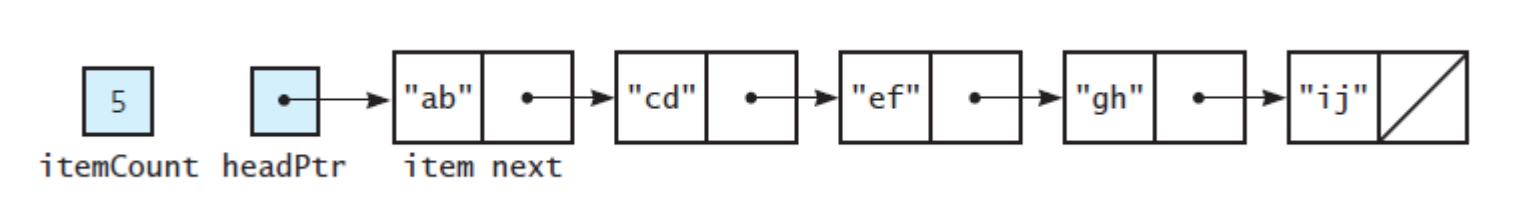

FIGURE 4-6 A link-based implementation of the ADT bag

```
+getCurrentSize(): integer
+isEmpty(): boolean
+add(newEntry: ItemType): boolean
+remove(anEntry: ItemType): boolean
+clear(): void
+getFrequencyOf(anEntry: ItemType): integer
+contains(anEntry: ItemType): boolean
+toVector(): vector
```

Bag operations, given in UML notation

The Header File

```
/** ADT bag: Link-based implementation.
 @file LinkedBag.h */

#ifndef LINKED_BAG_
#define LINKED_BAG_

#include "BagInterface.h"
#include "Node.h"

template<class ItemType>
class LinkedBag : public BagInterface<ItemType>
{
private:
   Node<ItemType>* headPtr; // Pointer to first node
   int itemCount;           // Current count of bag items
   // Returns either a pointer to the node containing a given entry
   // or the null pointer if the entry is not in the bag.
   Node<ItemType>* getPointerTo(const ItemType& target) const;

public:
```

LISTING 4-3 The header file for the class LinkedBag

The Header File

```
public:
   LinkedBag();                                  // Default constructor
   LinkedBag(const LinkedBag<ItemType>& aBag); // Copy constructor
   virtual &LinkedBag();          // Destructor should be virtual
   int getCurrentSize() const;
   bool isEmpty() const;
   bool add(const ItemType& newEntry);
   bool remove(const ItemType& anEntry);
   void clear();
   bool contains(const ItemType& anEntry) const;
   int getFrequencyOf(const ItemType& anEntry) const;
   vector<ItemType> toVector() const;
}; // end LinkedBag

#include "LinkedBag.cpp"
#endif
```

LISTING 4-3 The header file for the class LinkedBag

Defining the Core Methods

```
template<class ItemType>
LinkedBag<ItemType>::LinkedBag() : headPtr(nullptr), itemCount(0)
{
} // end default constructor
```

Default Constructor

```
template<class ItemType>
bool LinkedBag<ItemType>::add(const ItemType& newEntry)
{
   // Add to beginning of chain: new node references rest of chain;
   // (headPtr is nullptr if chain is empty)
   Node<ItemType>* newNodePtr = new Node<ItemType>();
   newNodePtr->setItem(newEntry);
   newNodePtr->setNext(headPtr);  // New node points to chain
   headPtr = newNodePtr;          // New node is now first node
   itemCount++;

   return true;
}  // end add
```

Inserting at the beginning of a linked chain

Defining the Core Methods

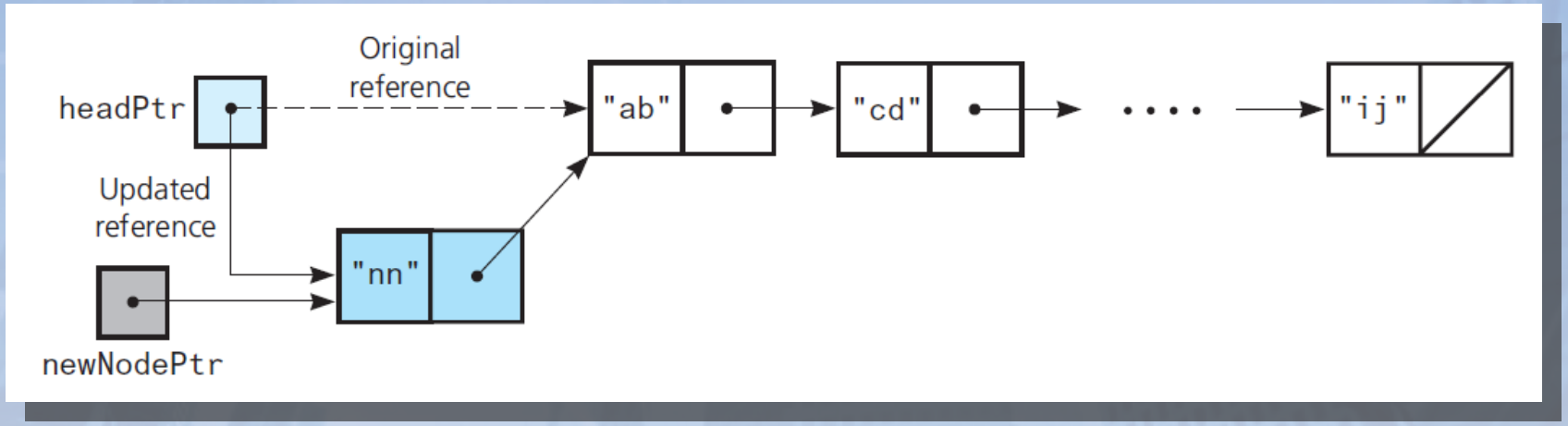

FIGURE 4-7 Inserting at the beginning of a linked chain

Defining the Core Methods

- Traverse operation visits each node in linked chain
  - Must move from node to node

```
Let a current pointer point to the first node in the chain
while (the current pointer is not the null pointer)
{
    Assign the data portion of the current node to the next element in a vector
    Set the current pointer to the next pointer of the current node
}
```

High-level pseudocode for this loop

Defining the Core Methods

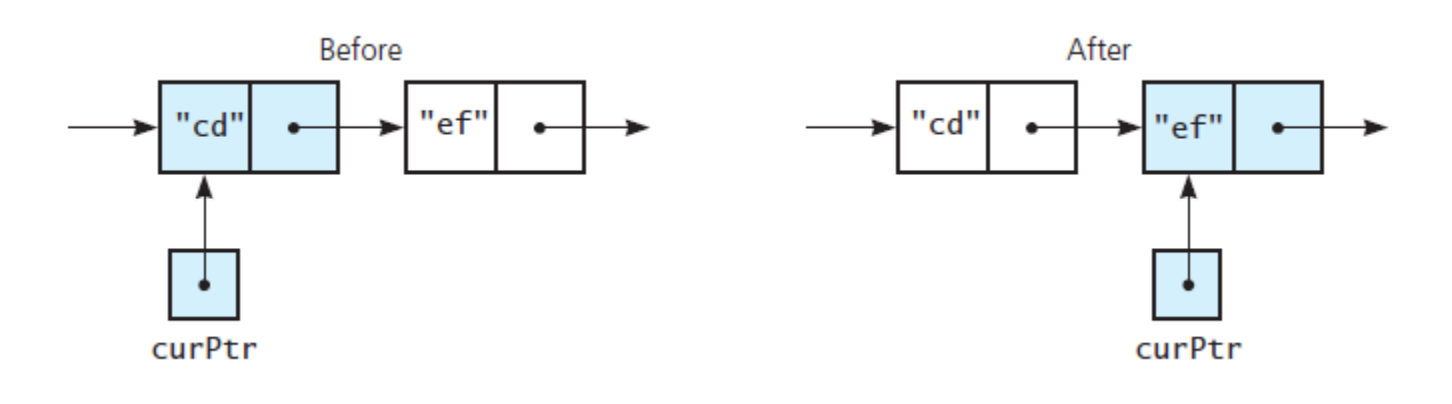

FIGURE 4-8 The effect of the assignment
curPtr = curPtr->getNext( )

Defining the Core Methods

```
template<class ItemType>
std::vector<ItemType> LinkedBag<ItemType>::toVector() const
{
   std::vector<ItemType> bagContents;
   Node<ItemType>* curPtr = headPtr;
   int counter = 0;
   while ((curPtr != nullptr) && (counter < itemCount))
   {
      bagContents.push_back(curPtr->getItem());
      curPtr = curPtr->getNext();
      counter++;
   }  // end while
   return bagContents;
}  // end toVector
```

Definition of toVector

Defining the Core Methods

```
template<class ItemType>
bool LinkedBag<ItemType>::isEmpty() const
{
   return itemCount== 0;
}  // end isEmpty

template<class ItemType>
int LinkedBag<ItemType>::getCurrentSize() const
{
   return itemCount;
}  // end getCurrentSize
```

Methods isEmpty and getCurrentSize

Implementing More Methods

```
template<class ItemType>
int LinkedBag<ItemType>::getFrequencyOf(const ItemType& anEntry) const
{
   int frequency = 0;
   int counter = 0;
   Node<ItemType>* curPtr = headPtr;
   while ((curPtr != nullptr) && (counter < itemCount))
   {
      if (anEntry == curPtr->getItem())
      {
          frequency++;
      }  // end if

      counter ++;
      curPtr = curPtr->getNext();
   }  // end while

   return frequency;
}  // end getFrequencyOf
```

Method getFrequencyOf

Implementing More Methods

```
// Returns either a pointer to the node containing a given entry
// or the null pointer if the entry is not in the bag.
template<class ItemType>
Node<ItemType>* LinkedBag<ItemType>::
                getPointerTo(const ItemType& target) const
{
   bool found = false;
   Node<ItemType>* curPtr = headPtr;
   while (!found && (curPtr != nullptr))
   {
      if (target == curPtr->getItem())
         found = true;
      else
         curPtr = curPtr->getNext();
   }  // end while

   return curPtr;
}  // end getPointerTo
```

Search for a specific entry. To avoid duplicate code, we perform this search in a private method

Implementing More Methods

```
template<class ItemType>
bool LinkedBag<ItemType>::contains(const ItemType& anEntry) const
{
   return (getPointerTo(anEntry) != nullptr);
}  // end contains
```

Note: definition of the method contains calls getPointerTo

Implementing More Methods

```
template<class ItemType>
bool LinkedBag<ItemType>::remove(const ItemType& anEntry)
{
   Node<ItemType>* entryNodePtr = getPointerTo(anEntry);
   bool canRemoveItem = !isEmpty() && (entryNodePtr != nullptr);
   if (canRemoveItem)
   {
      // Copy data from first node to located node
      entryNodePtr->setItem(headPtr->getItem());

      // Disconnect first node
      Node<ItemType>* nodeToDeletePtr = headPtr;
      headPtr = headPtr->getNext();

      // Return node to the system
      nodeToDeletePtr->setNext(nullptr);
      delete nodeToDeletePtr;
      nodeToDeletePtr = nullptr;

      itemCount--;
   }  // end if

   return canRemoveItem;
}  // end remove
```

Method remove also calls getPointerTo

Implementing More Methods

```
template<class ItemType>
void LinkedBag<ItemType>::clear()
{
   Node<ItemType>* nodeToDeletePtr = headPtr;
   while (headPtr != nullptr)
   {
      headPtr = headPtr->getNext();

      // Return node to the system
      nodeToDeletePtr->setNext(nullptr);
      delete nodeToDeletePtr;
      nodeToDeletePtr = headPtr;
   }  // end while
   // headPtr is nullptr; nodeToDeletePtr is nullptr

   itemCount = 0;
}  // end clear
```

Method clear deallocates all nodes in the chain.

Implementing More Methods

```
template<class ItemType>
LinkedBag<ItemType>::~LinkedBag()
{
   clear();
}  // end destructor
```

Destructor calls clear, destroys instance of a class

Implementing More Methods

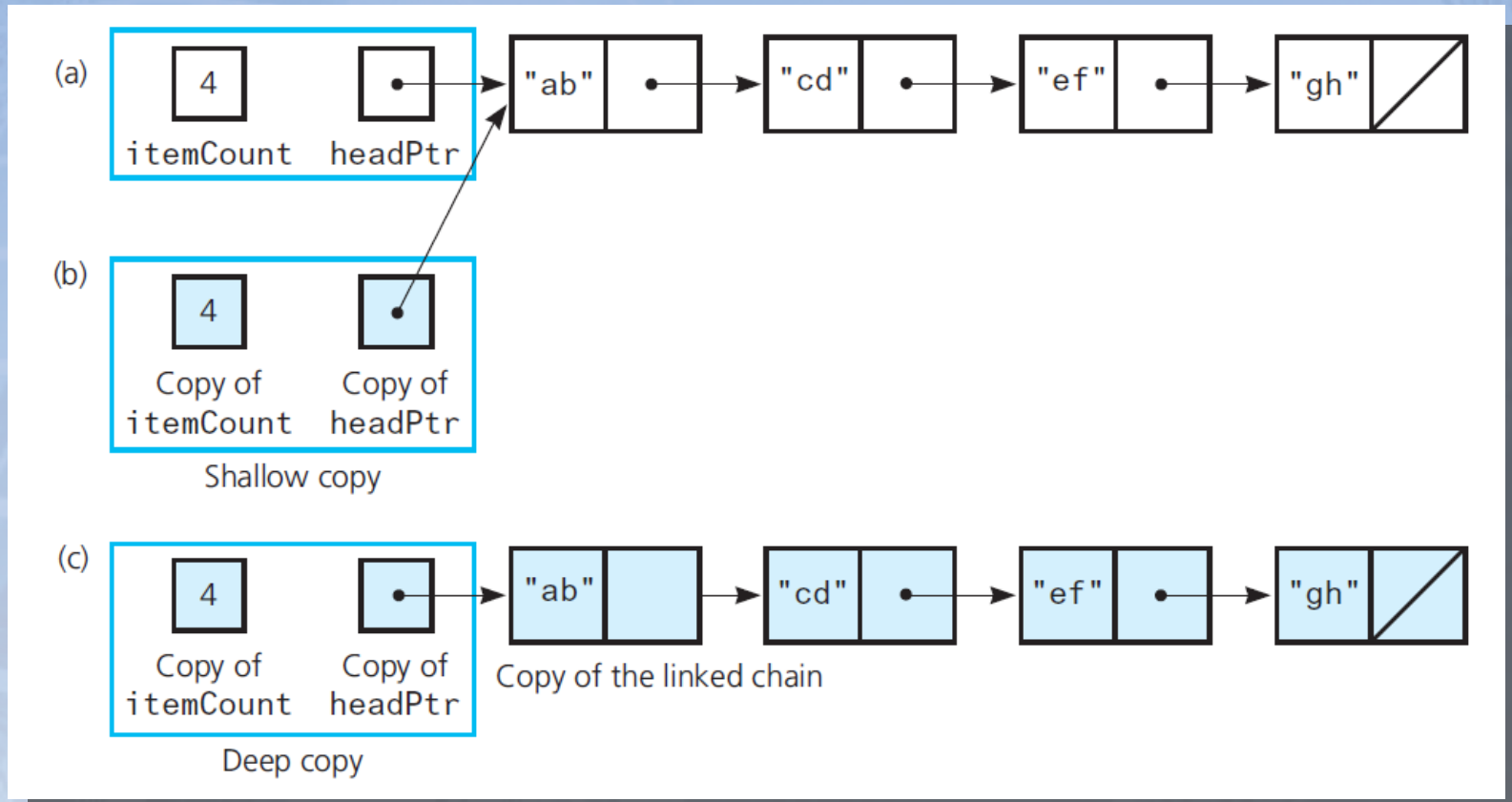

FIGURE 4-9 (a) A linked chain and its shallow copy; (b) a linked chain and its deep copy

Implementing More Methods

```
template<class ItemType>
LinkedBag<ItemType>::LinkedBag(const LinkedBag<ItemType>& aBag)
{
   itemCount = aBag.itemCount;
   Node<ItemType>* origChainPtr = aBag.headPtr;

    if (origChainPtr == nullptr)
       headPtr = nullptr; // Original bag is empty; so is copy
    else
    {
       // Copy first node
       headPtr = new Node<ItemType>();
       headPtr->setItem(origChainPtr->getItem());

       // Copy remaining nodes
       Node<ItemType>* newChainPtr = headPtr;      // Last-node pointer
           origChainPtr = origChainPtr->getNext(); // Advance pointer
       while (origChainPtr != nullptr)
       {
```

Copy constructor to accomplish deep copy.

Implementing More Methods

```
        origChainPtr = origChainPtr->getNext(); // Advance pointer
    while (origChainPtr != nullptr)
    {
       // Get next item from original chain
       ItemType nextItem = origChainPtr->getItem();

       // Create a new node containing the next item
       Node<ItemType>* newNodePtr = new Node<ItemType>(nextItem);

       // Link new node to end of new chain
       newChainPtr->setNext(newNodePtr);

       // Advance pointers
       newChainPtr = newChainPtr->getNext();
       origChainPtr = origChainPtr->getNext();
    }  // end while

    newChainPtr->setNext(nullptr); // Flag end of new chain
  }  // end if
}  // end copy constructor
```

Copy constructor to accomplish deep copy.

Recursive Definitions Methods in LinkedBag

- Revise methods in class to use recursion
  - Traverse chain of linked nodes
  - Make no changes to the chain
- Method toVector
  - Has a straightforward recursive implementation
  - Must be a private method
  - Receives head pointer as parameter
  - Vector must also be a parameter

Recursive Definitions Methods in LinkedBag

```
template<class ItemType>
std::vector<ItemType> LinkedBag<ItemType>::toVector() const
{
   std::vector<ItemType> bagContents;
   fillVector(bagContents, headPtr);
   return bagContents;
}  // end toVector
```

Method toVector

Recursive Definitions Methods in LinkedBag

- Private method getPointerTo
  - Locates given entry within linked chain
  - Traversal stops if it locates node that contains given entry

```
template<class ItemType>
Node<ItemType>* LinkedBag<ItemType>::getPointerTo(const ItemType& target,
                                                  Node<ItemType>* curPtr) const
{
   Node<ItemType>* result = nullptr;
   if (curPtr != nullptr)
   {
      if (target == curPtr->getItem())
         result = curPtr;
      else
         result = getPointerTo(target, curPtr->getNext());
   }  // end if

   return result;
}  // end getPointerTo
```

Testing Multiple ADT Implementations

- Recall test program of Listing 3-2
- Used ADT bag methods when we tested our implementation
- Can use the same code—with a few changes
  - Change each occurrence of ArrayBag to LinkedBag and recompile the program

Testing Multiple ADT Implementations

```
#include "BagInterface.h"
#include "ArrayBag.h"
#include "LinkedBag.h"
#include <iostream>
#include <string>

void displayBag(BagInterface<std::string>* bagPtr)
{
   std::cout << "The bag contains " << bagPtr->getCurrentSize()
             << " items:" << std::endl;
   std::vector<std::string> bagItems = bagPtr->toVector();
   int numberOfEntries = bagItems.size();
   for (int i = 0; i < numberOfEntries; i++)
   {
      std::cout << bagItems[i] << " ";
   }  // end for
   std::cout << std::endl << std::endl;
}  // end displayBag

void bagTester(BagInterface<std::string>* bagPtr)
```

LISTING 4-4 A program that tests the core methods of classes that are derived from the abstract class BagInterface

Testing Multiple ADT Implementations

```
void bagTester(BagInterface<std::string>* bagPtr)
{
   std::cout << "isEmpty: returns " << bagPtr->isEmpty()
             << "; should be 1 (true)" << std::endl;
   std::string items[] = {"one", "two", "three", "four", "five", "one"};
   std::cout << "Add 6 items to the bag: " << std::endl;
   for (int i = 0; i < 6; i++)
   {
      bagPtr->add(items[i]);
   }  // end for

   displayBag(bagPtr);
   std::cout << "isEmpty: returns " << bagPtr->isEmpty()
             << "; should be 0 (false)" << std::endl;
   std::cout << "getCurrentSize returns : " << bagPtr->getCurrentSize()
             << "; should be 6" << std::endl;
   std::cout << "Try to add another entry: add(\"extra\") returns "
             << bagPtr->add("extra") << std::endl;
}  // end bagTester
```

LISTING 4-4 A program that tests the core methods of classes that are derived from the abstract class BagInterface

Testing Multiple ADT Implementations

```
int main()
{
   BagInterface<std::string>* bagPtr = nullptr;
   char userChoice;
   std::cout << "Enter 'A' to test the array-based implementation\n"
             << " or 'L' to test the link-based implementation: ";
   std::cin  >> userChoice;
   if (toupper(userChoice) == 'A')
   {
      bagPtr = new ArrayBag<std::string>();
      std::cout << "Testing the Array-Based Bag:" << std::endl;
   }
   else
   {
      bagPtr = new LinkedBag<std::string>();
      std::cout << "Testing the Link-Based Bag:" << std::endl;
   }  // end if
```

LISTING 4-4 A program that tests the core methods of classes that are derived from the abstract class BagInterface

Testing Multiple ADT Implementations

```
    std::cout << "The initial bag is empty." << std::endl;
    bagTester(bagPtr);
    delete bagPtr;
    bagPtr = nullptr;
    std::cout << "All done!" << std::endl;

    return 0;
}  // end main
```

Sample Output 1

```
Enter 'A' to test the array-based implementation
or 'L' to test the link-based implementation: A
Testing the Array-Based Bag:
```

LISTING 4-4 A program that tests the core methods of classes that are derived from the abstract class BagInterface

Testing Multiple ADT Implementations

Sample Output 1

```
Enter 'A' to test the array-based implementation
or 'L' to test the link-based implementation: A
Testing the Array-Based Bag:
The initial bag is empty.
isEmpty: returns 1; should be 1 (true)
Add 6 items to the bag:
The bag contains 6 items:
one two three four five one

isEmpty: returns 0; should be 0 (false)
getCurrentSize returns : 6; should be 6
Try to add another entry: add("extra") returns 0
All done!
```

LISTING 4-4 A program that tests the core methods of classes that are derived from the abstract class BagInterface

Testing Multiple ADT Implementations

Sample Output 2

```
Enter 'A' to test the array-based implementation
or 'L' to test the link-based implementation: L
Testing the Link-Based Bag:
The initial bag is empty.
isEmpty: returns 1; should be 1 (true)
Add 6 items to the bag:
The bag contains 6 items:
one five four three two one

isEmpty: returns 0; should be 0 (false)
getCurrentSize returns : 6; should be 6
Try to add another entry: add("extra") returns 1
All done!
```

LISTING 4-4 A program that tests the core methods of classes that are derived from the abstract class BagInterface

Comparing Array-Based and Link-Based Implementations

- Arrays easy to use, but have fixed size
  - Not always easy to predict number of items in ADT
  - Array could waste space
  - Increasing size of dynamically allocated array can waste storage *and* time
  - Can access array items directly with equal access time
  - An array-based implementation is a good choice for a small bag

Comparing Array-Based and Link-Based Implementations

- Linked chains do not have fixed size
  - In a chain of linked nodes, an item points explicitly to the next item
  - Link-based implementation requires more memory
  - Must traverse a linked chain to access its ith node
  - Time to access i^{th} node in a linked chain depends on i

End

Chapter 4