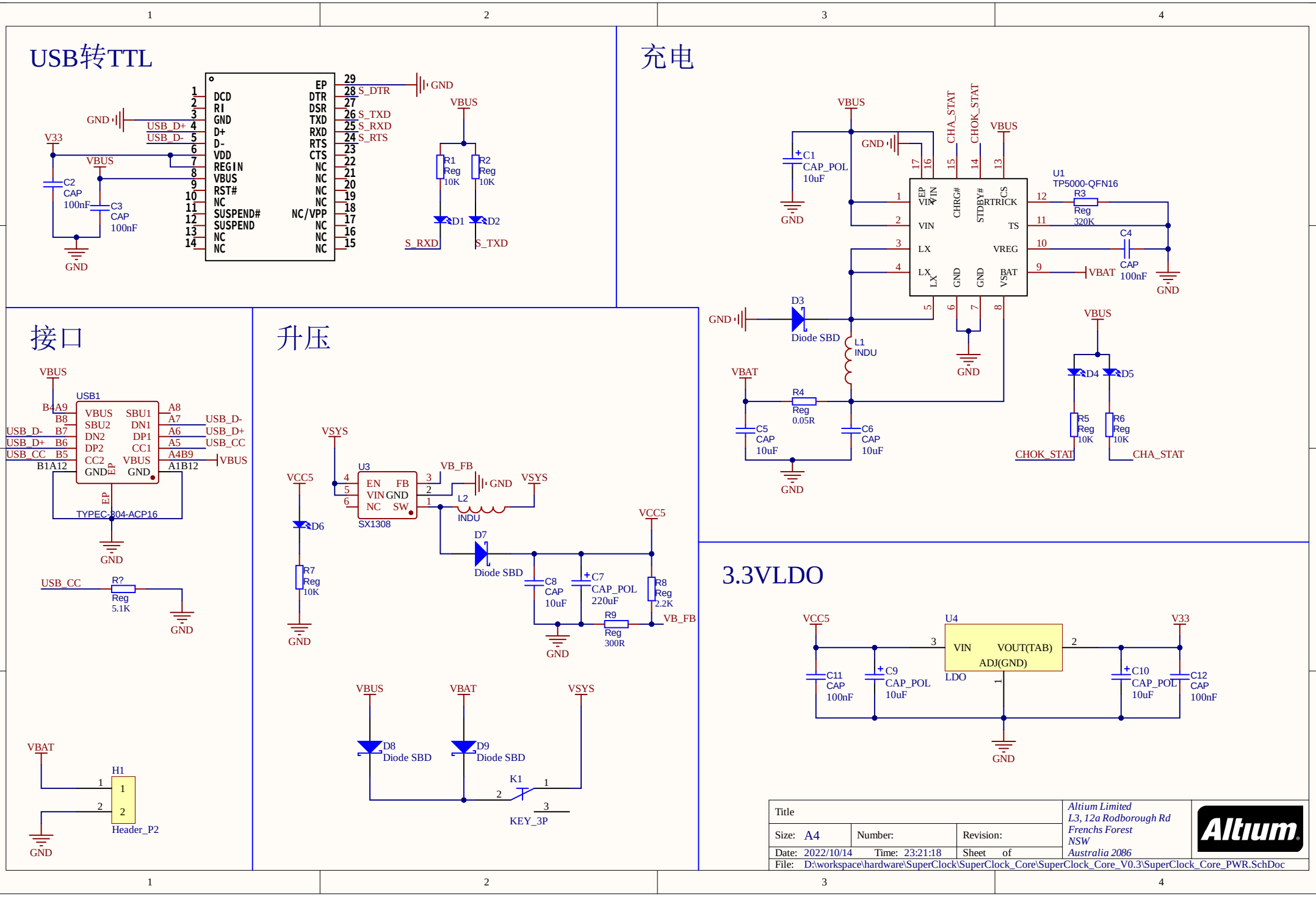
USB转TTL
充电
接口
升压
3.3VLDO
DCD
RI
GND
D+
D-
VDD
REGIN
VBUS
RST#
NC
SUSPEND#
SUSPEND
NC
NC
EP
DTR
DSR
TXD
RXD
RTS
CTS
NC/VPP
S_DTR
S_TXD
S_RXD
S_RTS
USB_D+
USB_D-
V33
C2 CAP 100nF
C3 CAP 100nF
R1 Reg 10K
R2 Reg 10K
D1
D2
U1 TP5000-QFN16
C1 CAP_POL 10uF
CHA_STAT
CHOK_STAT
R3 Reg 320K
C4 CAP 100nF
VBAT
D3 Diode SBD
L1 INDU
R4 Reg 0.05R
C5 CAP 10uF
C6 CAP 10uF
D4
D5
R5 Reg 10K
R6 Reg 10K
USB1
TYPEC-304-ACP16
R? Reg 5.1K
U3 SX1308
VSYS
VCC5
VB_FB
L2 INDU
D6
D7 Diode SBD
R7 Reg 10K
C8 CAP 10uF
C7 CAP_POL 220uF
R8 Reg 2.2K
R9 Reg 300R
D8 Diode SBD
D9 Diode SBD
K1
KEY_3P
H1
Header_P2
U4 LDO
VIN
VOUT(TAB)
ADJ(GND)
C11 CAP 100nF
C9 CAP_POL 10uF
C10 CAP_POL 10uF
C12 CAP 100nF
Title
Size: A4
Number:
Revision:
Date: 2022/10/14
Time: 23:21:18
Sheet of
File: D:\workspace\hardware\SuperClock\SuperClock_Core\SuperClock_Core_V0.3\SuperClock_Core_PWR.SchDoc
Altium Limited
L3, 12a Rodborough Rd
Frenchs Forest
NSW
Australia 2086
Altium

## 蜂鸣器

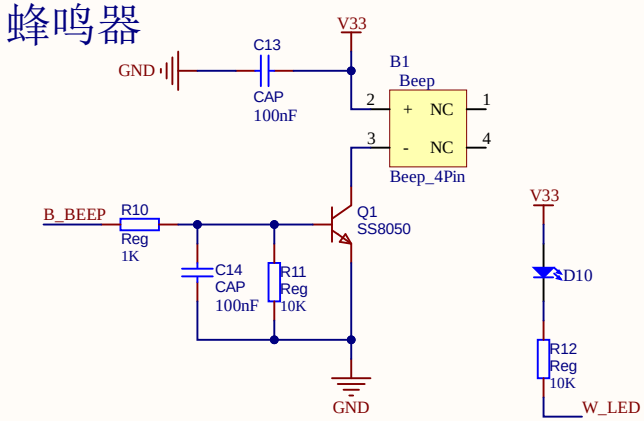


## WIFI模块

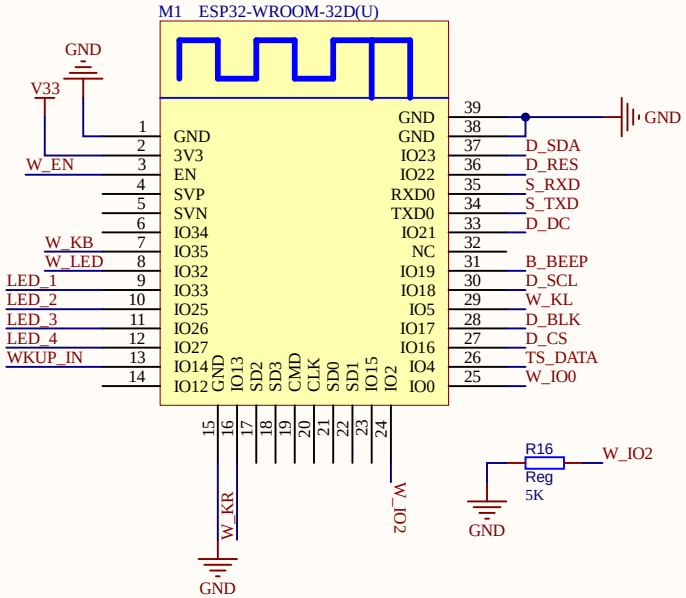


## TFT显示器

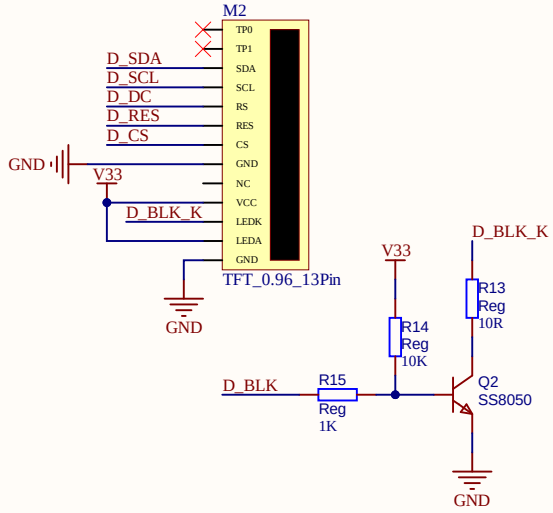


## LED接口

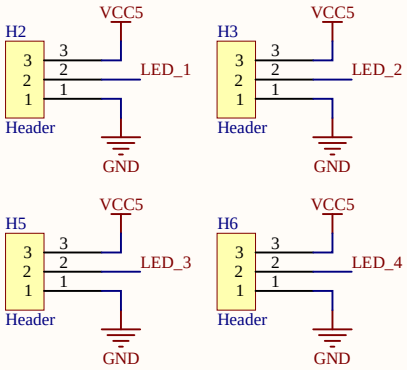


## 外部唤醒

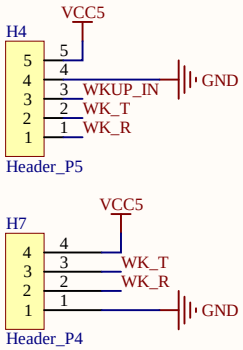


## 测试点

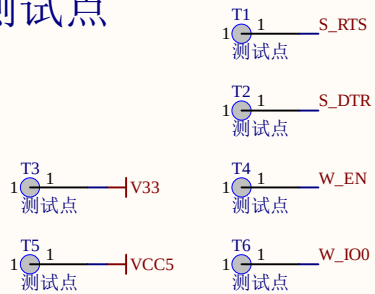


## 自动下载

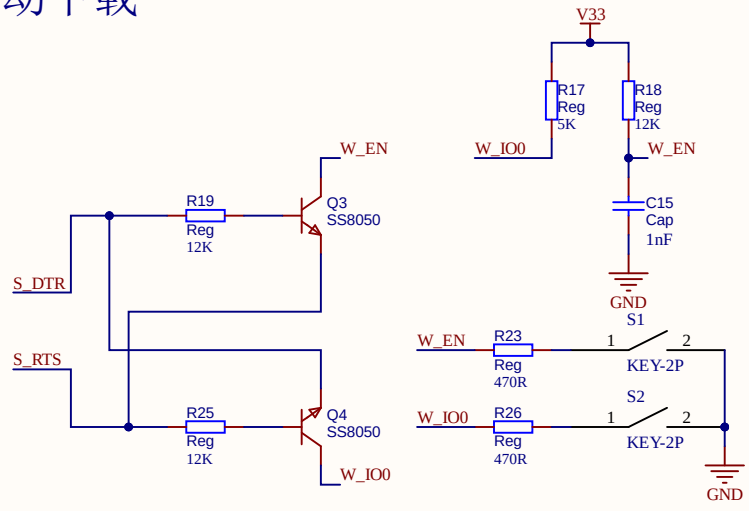


## 温湿度传感器

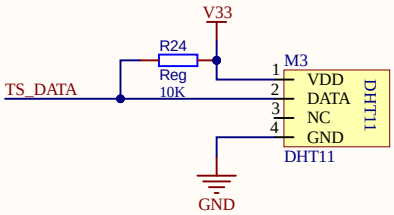


## 按键

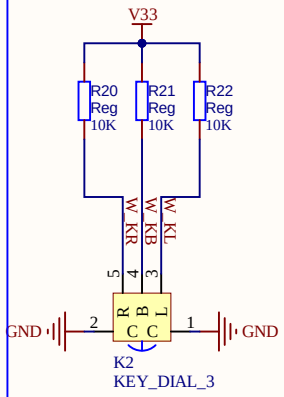


## 调试接口

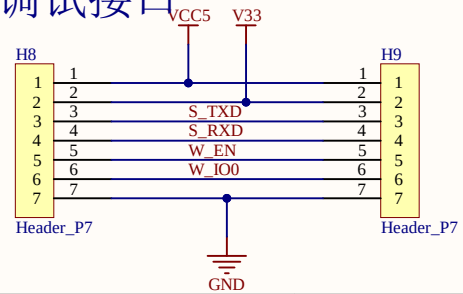


| | | | |
|---|---|---|---|
| Title | | | *Altium Limited*<br>*L3, 12a Rodborough Rd*<br>*Frenchs Forest*<br>*NSW*<br>*Australia 2086* |
| Size: A4 | Number: | Revision: | |
| Date: 2022/10/14 | Time: 23:21:18 | Sheet of | |
| File: D:\workspace\hardware\SuperClock\SuperClock_Core\SuperClock_Core_V0.3\SuperClock_Core_WIFI.SchDoc | | | |

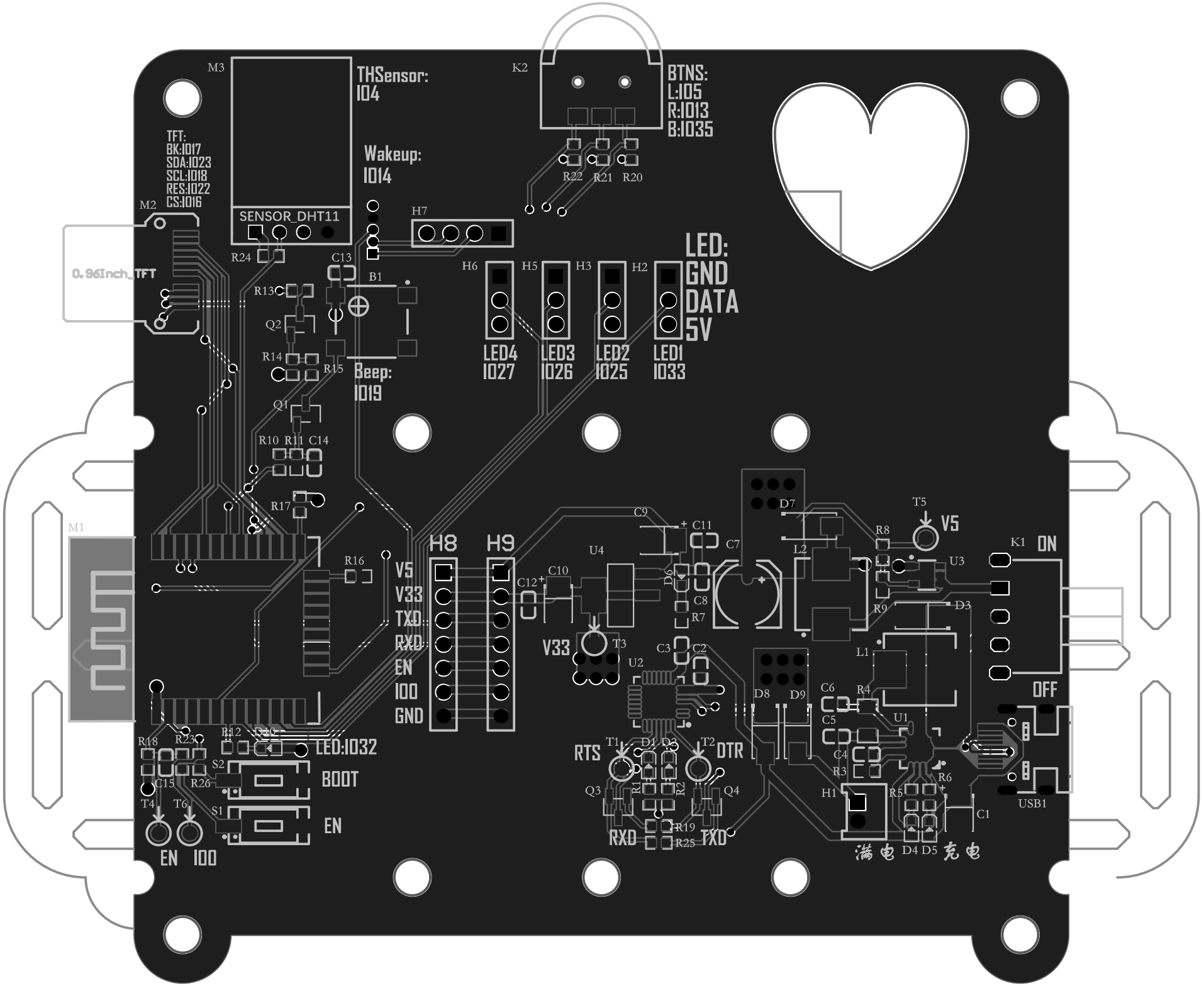
M3
THSensor:
I04
K2
BTNS:
L:I05
R:I013
B:I035
TFT:
BK:I017
SDA:I023
SCL:I018
RES:I022
CS:I016
Wakeup:
I014
M2
SENSOR_DHT11
H7
R22 R21 R20
R24
C13
B1
H6 H5 H3 H2
LED:
GND
DATA
5V
0.96Inch_TFT
R13
Q2
R14
R15
Beep:
I019
LED4
I027
LED3
I026
LED2
I025
LED1
I033
Q1
R10 R11 C14
R17
M1
R16
H8 H9
V5
V33
TXD
RXD
EN
I00
GND
C9
C11
C7
U4
C10
C12
C8
R7
D7
T5
V5
R8
L2
U3
K1
ON
D3
R9
V33
T3
C3
C2
U2
L1
D8 D9
C6
R4
C5
U1
OFF
C4
R3
R6
H1
R5
C1
USB1
R18 R23
R12
LED:I032
S2
BOOT
C15
R26
S1
EN
T4
T6
EN
I00
RTS
T1
D1 D2
T2
DTR
Q3
Q4
R19
R25
RXD
TXD
满电
D4 D5
充电

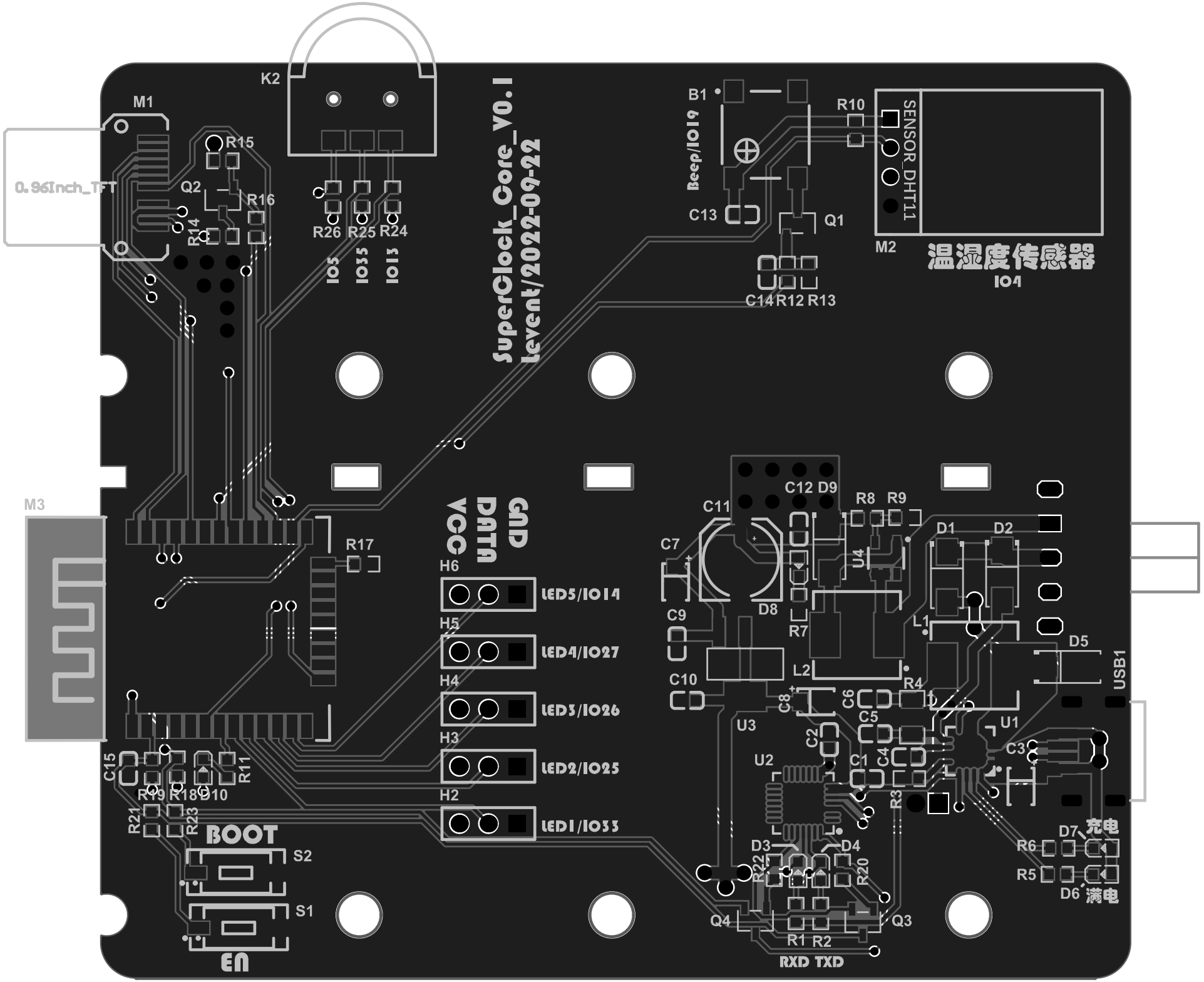

SuperClock_Core_V0.1
Levent/2022-09-22
0.96Inch_TFT
M1
K2
R15
Q2
R16
R14
R26 R25 R24
IO5
IO35
IO13
B1
Beep/IO19
R10
SENSOR_DHT11
C13
Q1
M2
温湿度传感器
IO4
C14 R12 R13
M3
R17
GND
DATA
VCC
H6
LED5/IO14
H5
LED4/IO27
H4
LED3/IO26
H3
LED2/IO25
H2
LED1/IO33
C12 D9
R8 R9
C11
C7
D1
D2
U4
D8
R7
C9
L1
D5
USB1
L2
C10
R4
C8
C6
C5
U3
U1
C2
C4
C3
U2
C1
R3
C15
R11
R19 R18 D10
R21
R23
BOOT
S2
S1
EN
D3
D4
R22
R20
D7
充电
R6
R5
D6
满电
Q4
Q3
R1 R2
RXD TXD

| Comment | Description | Designator | Footprint | LibRef | Quantity |
|---|---|---|---|---|---|
| Beep_4Pin | 4Pin蜂鸣器 | B1 | Beep_4Pin_7525 | Beep_4Pin | 1 |
| CAP_POL | 极性电容 | C1, C9, C10 | CP1210 | CAP_POL | 3 |
| CAP | Cap | C2, C3, C4, C5, C6, C8, C11, C12, C13, C14, C15 | C0603 | CAP | 11 |
| CAP_POL | 极性电容 | C7 | CAP_SMD_6.3mm | CAP_POL | 1 |
| LED | LED | D1, D2, D4, D5, D6, D10 | LED0603 | LED0 | 6 |
| Diode SBD | Schottky Rectifier | D3, D7, D8, D9 | SMA_L4.3 | Diode SBD | 4 |
| Header_P2 | 2Pin排针 | H1 | PH_2Pin | Header_P2 | 1 |
| Header | 3Pin接口 | H2, H3, H5, H6 | H_2.54_P3 | Header_P3 | 4 |
| Header_P5 | 5Pin排针 | H4 | H_1.27_P5 | Header_P5 | 1 |
| Header_P4 | 4Pin排针 | H7 | H_2.54_P4 | Header_P4 | 1 |
| Header_P7 | 7Pin排针 | H8, H9 | H_2.54_P7 | Header_P7 | 2 |
| KEY_3P | 3Pin按键 | K1 | SWITCH_3P_2 | KEY_3P | 1 |
| KEY_DIAL_3 | 3向拨轮开关 | K2 | KEY_DIAL_3 | KEY_DIAL_3 | 1 |
| INDU | 电感 | L1, L2 | SMD_L7.1 | IND | 2 |
| ESP32-WROOM-32D(U) | ESP32-WROOM-32D(U) | M1 | ESP32-WROOM-32D | ESP32-WROOM-32D(U) | 1 |
| TFT_0.96_13Pin | ST7735_TFT | M2 | TFT_0.96_13Pin | TFT_0.96_13Pin | 1 |
| DHT11 | 温湿度传感器 | M3 | SENSOR-TH_DHT11-HOR | DHT11 | 1 |
| SS8050 | NPN | Q1, Q2, Q3, Q4 | SOT-23-3 | SS8050 | 4 |
| Reg | 电阻 | R1, R2, R3, R5, R6, R7, R8, R9, R10, R11, R12, R13, R14, R15, R16, R17, R18, R19, R20, R21, R22, R23, R24, R25, R26, R? | R0603 | Res | 26 |
| Reg | 电阻 | R4 | R1206 | Res | 1 |
| KEY-2P | KEY-2Pp | S1, S2 | KEY_SOT_P2 | KEY_2P | 2 |
| 测试点 | 测试点 | T1, T2, T3, T4, T5, T6 | TEST_POINT | TEST_POINT | 6 |
| TP5000-QFN16 | | U1 | QFN-16_L4.0-W4.0-P0.65-BL-EP2.2 | TP5000-QFN16 | 1 |
| CP2102-GM | CP2102USB转串口 | U2 | QFN-28 | CP2102-GM | 1 |
| SX1308 | 升压PWM | U3 | SOT-23-6 | SX1308 | 1 |
| LDO | LDO | U4 | SOT-223 | AMS1117 | 1 |
| TYPEC-304-ACP16 | 全引脚USB TYPEC母座 | USB1 | USB-C-SMD_TYPE-C-16P | USB_TYPEC_12P | 1 |