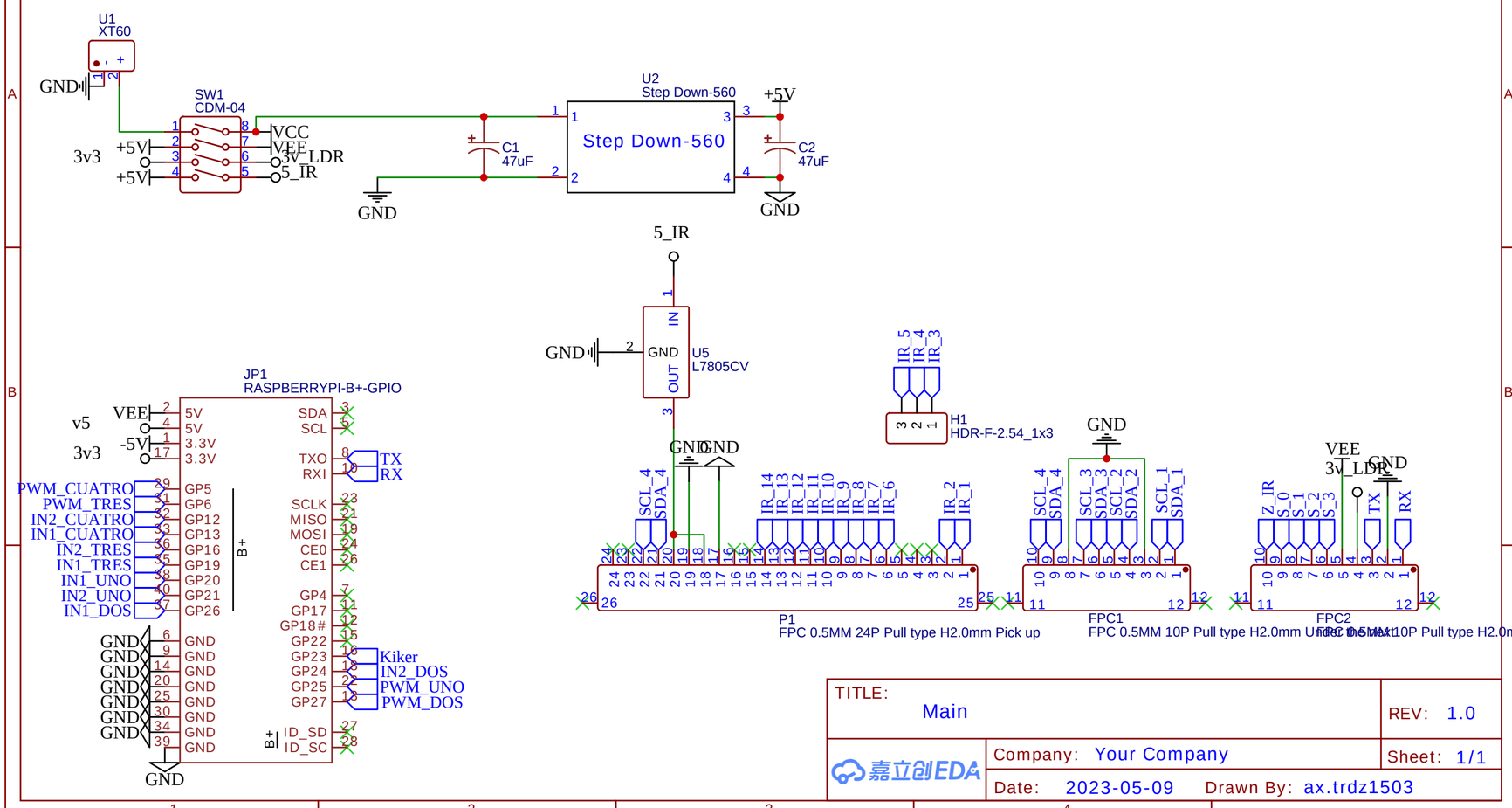

TITLE: Main
REV: 1.0
Company: Your Company
Sheet: 1/1
Date: 2023-05-09
Drawn By: ax.trdz1503

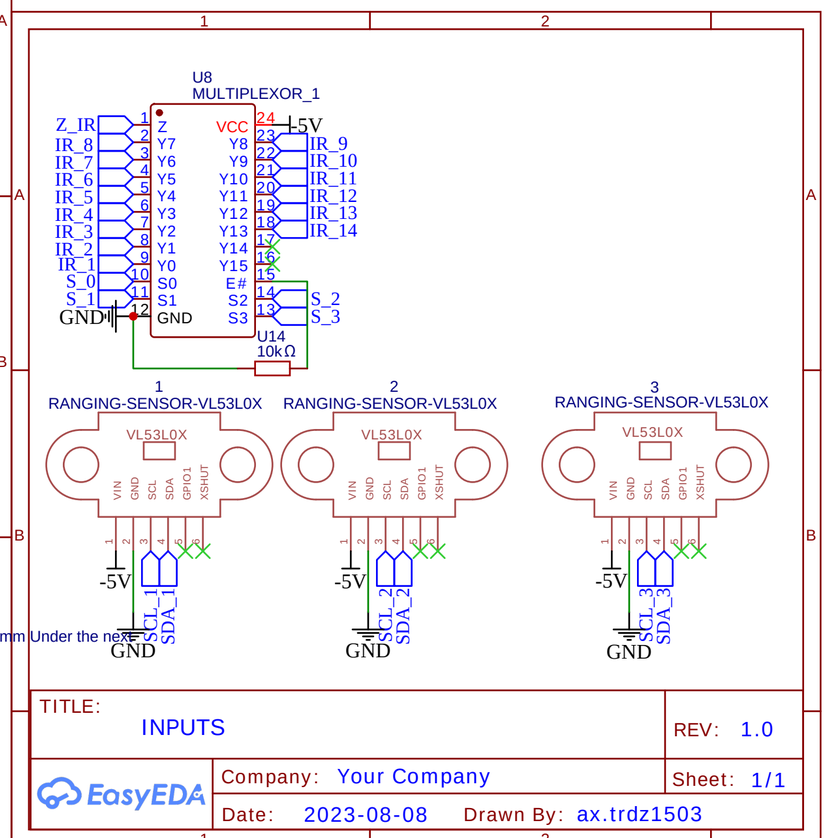

TITLE: INPUTS
REV: 1.0
Company: Your Company
Sheet: 1/1
Date: 2023-08-08
Drawn By: ax.trdz1503

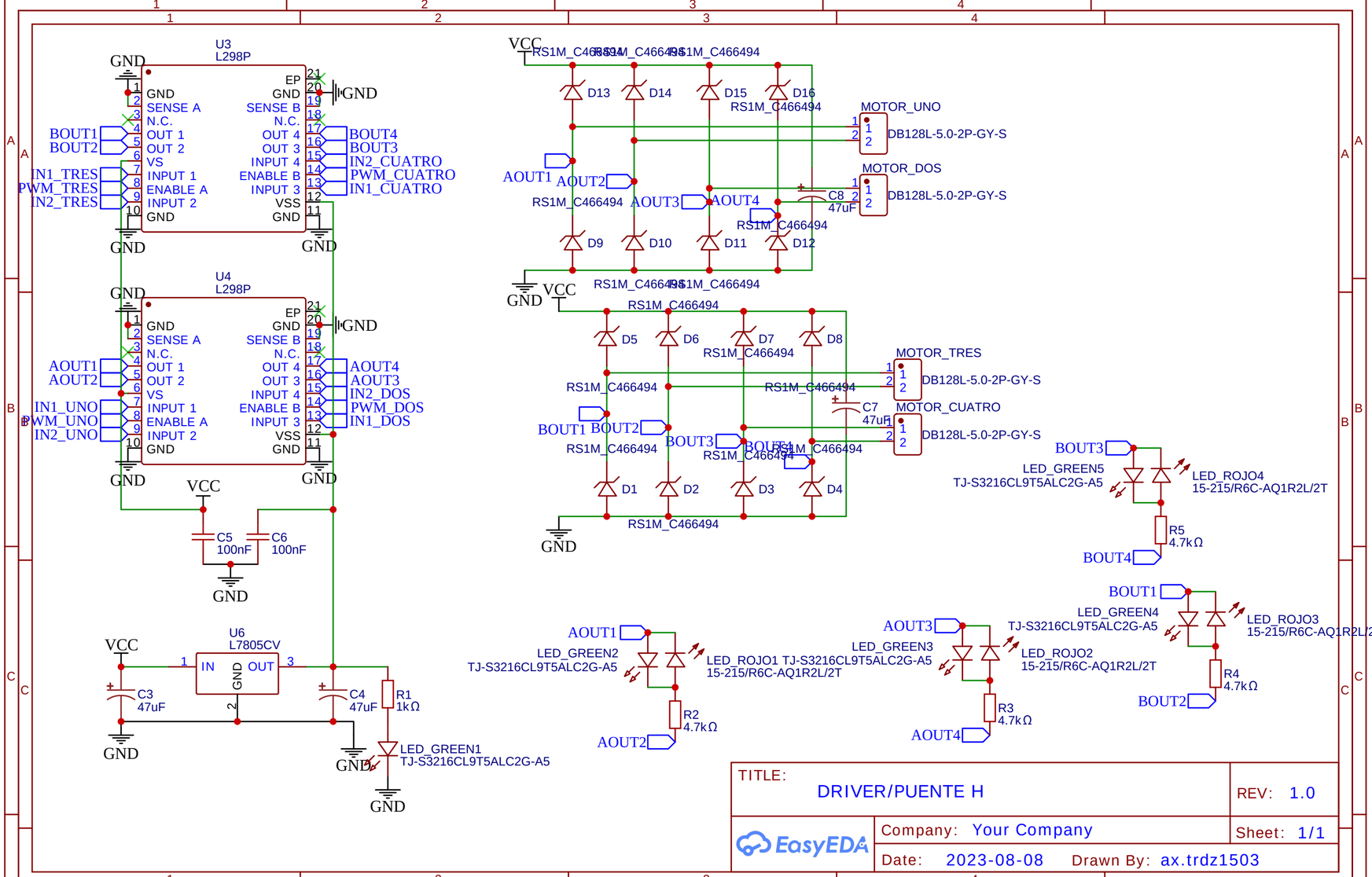

TITLE: DRIVER/PUENTE H
REV: 1.0
Company: Your Company
Sheet: 1/1
Date: 2023-08-08
Drawn By: ax.trdz1503

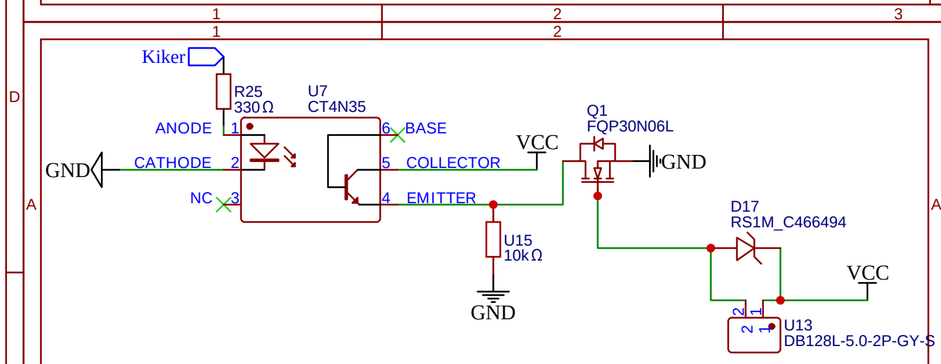

TITLE: kicker
REV: 1.0
Company: Your Company
Sheet: 1/1
Date: 2023-08-08
Drawn By: ax.trdz1503

TITLE: OUTPUTS
REV: 1.0
Company: Your Company
Sheet: 1/1
Date: 2023-08-08
Drawn By: ax.trdz1503