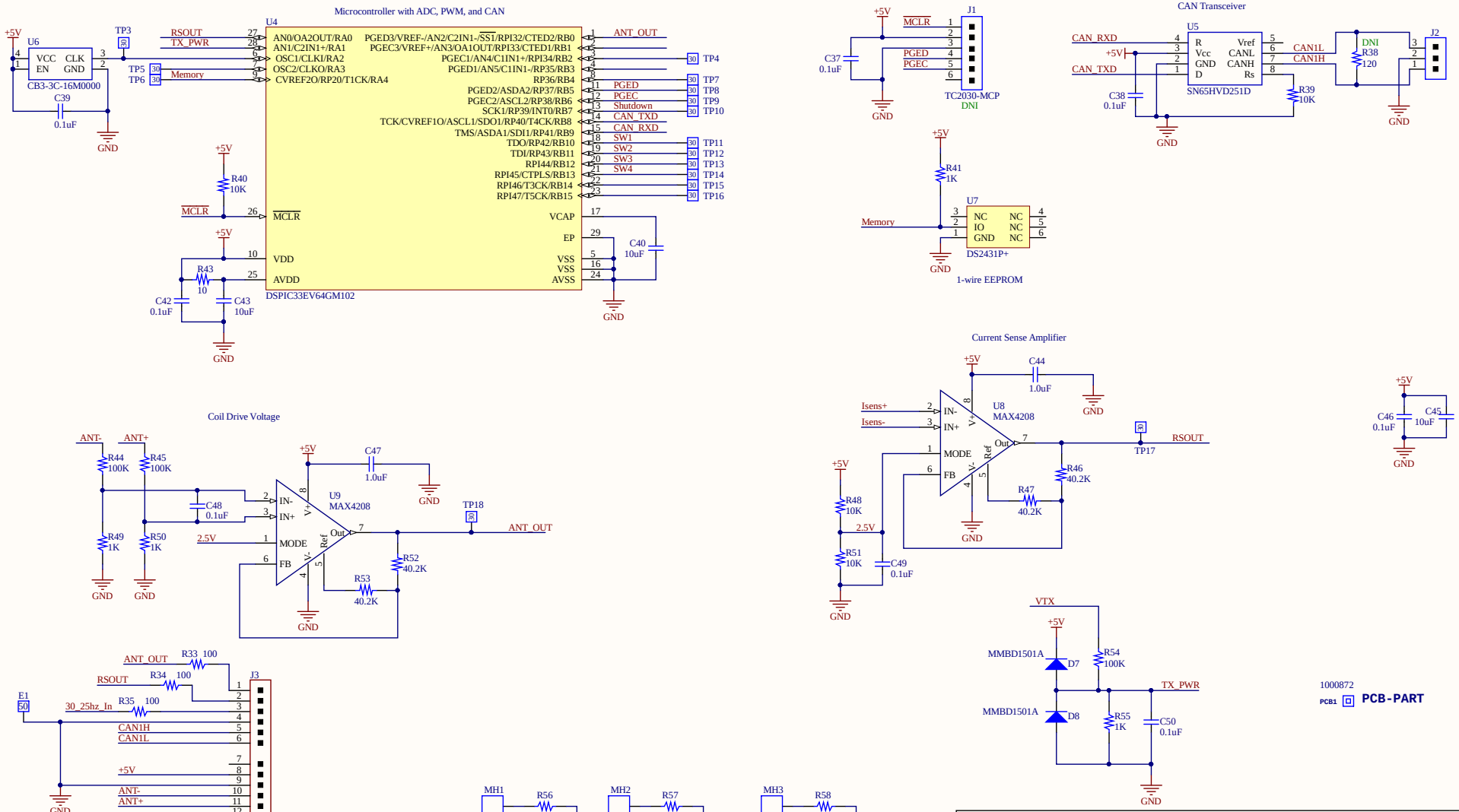

THIS DOCUMENT AND ALL ACCOMPANYING INFORMATION IS THE CONFIDENTIAL PROPERTY OF PROBE TECHNOLOGY SERVICES, INC. IT MAY NOT BE COPIED, RECOPIED, REPRODUCED, TRANSMITTED, OR DISCLOSED TO OTHERS WITHOUT EXPRESS PERMISSION AND IS TO BE RETURNED UPON REQUEST. ALL RIGHTS IN PROPRIETARY, COPYRIGHT AND NOVEL FEATURES OF THE SUBJECT MATTER ARE EXPRESSLY RESERVED BY PROBE TECHNOLOGY SERVICES, INC. RECIPIENTS AGREEMENT TO THE FOREGOING IS INDICATED BY ACCEPTANCE OF THIS DOCUMENT.

Title: SCHEMATIC, HIGH VOLTAGE TRANSMITTER 1000873 HVTX SHT2 Rev 0.SchDoc			*Probe Technology Services* *1132 Everman Pkwy* *Fort Worth, TX, 76140* *www.probe1.com*
Size: B	Number: 1000873	Revision: 0	
Date: 2/13/2019	Time: 4:55:31 PM	Sheet 2 of 2	
Drawn By: MWH	Project Name: 1000872 HVTX-Rev0.PrjPcb		