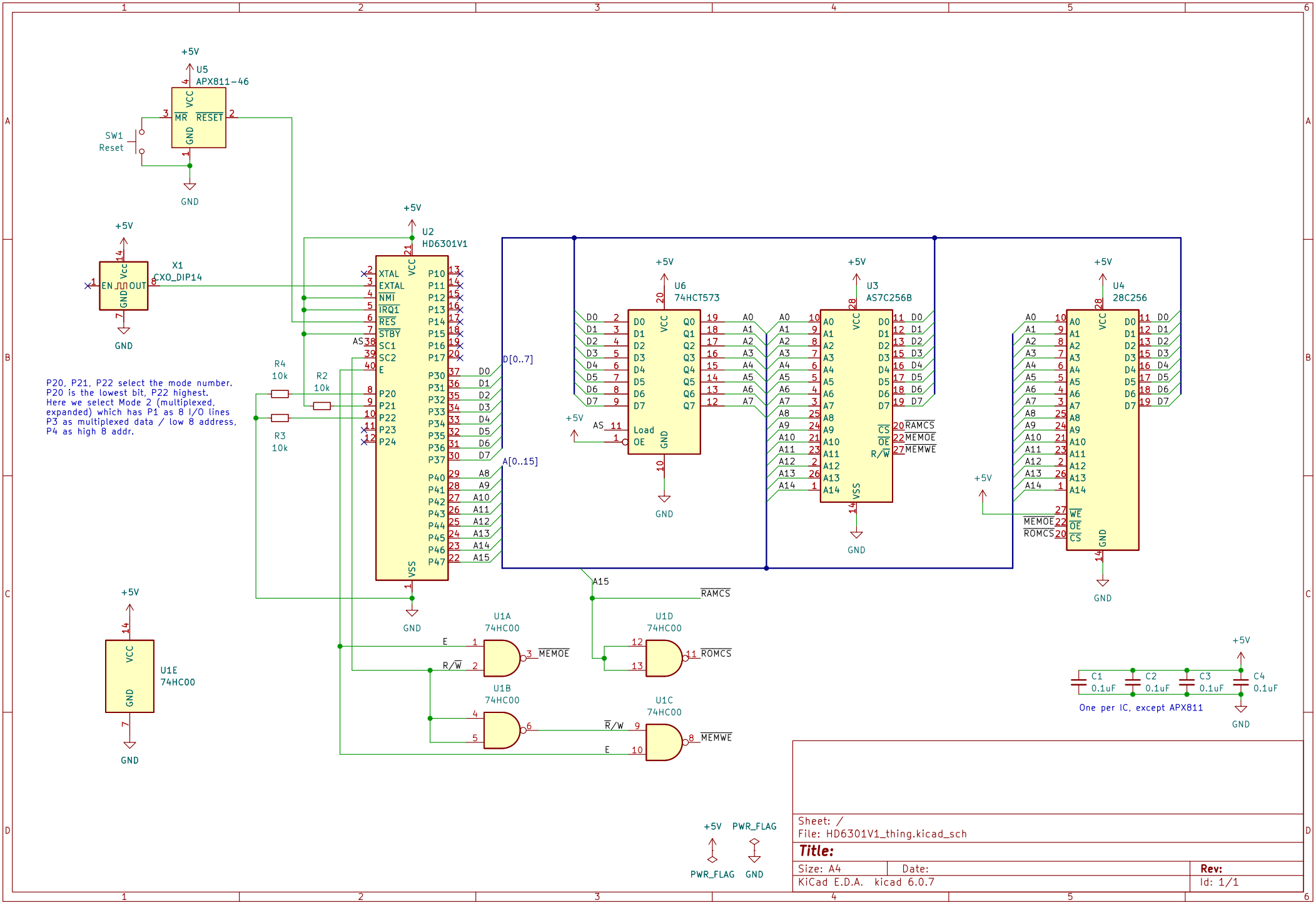
U5
APX811-46
SW1
Reset
U2
HD6301V1
X1
CXO_DIP14
P20, P21, P22 select the mode number.
P20 is the lowest bit, P22 highest.
Here we select Mode 2 (multiplexed, expanded) which has P1 as 8 I/O lines
P3 as multiplexed data / low 8 address,
P4 as high 8 addr.
R4
10k
R2
10k
R3
10k
D[0..7]
A[0..15]
U6
74HCT573
U3
AS7C256B
U4
28C256
U1A
74HC00
U1B
74HC00
U1C
74HC00
U1D
74HC00
U1E
74HC00
RAMCS
ROMCS
MEMOE
MEMWE
C1
0.1uF
C2
0.1uF
C3
0.1uF
C4
0.1uF
One per IC, except APX811
PWR_FLAG
Sheet: /
File: HD6301V1_thing.kicad_sch
Title:
Size: A4
Date:
Rev:
KiCad E.D.A. kicad 6.0.7
Id: 1/1