What makes a good solution?

- easy to understand if took same route you did
- states problem
- uses simplest concepts possible
- is concise (not at expense of clarity)
- using established form
- correct

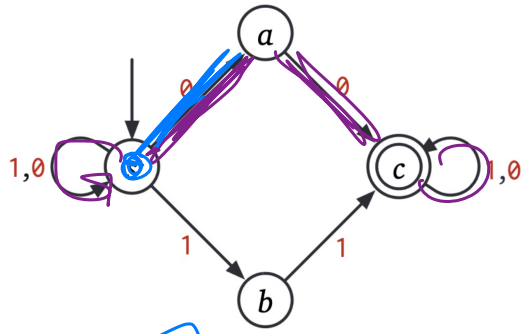

what's wrong w/ this DFA?

nondeterministic finite automaton (NFA)

$w = \boxed{0110}1001$

$s \xrightarrow{0} s \xrightarrow{1} s \xrightarrow{1} s \xrightarrow{0} s \xrightarrow{1} s \xrightarrow{0} a \xrightarrow{0} c \xrightarrow{1} c$

An NFA accepts w iff there is some accepting path for w.

Conceptually:

- clairvoyance
- parallel threads

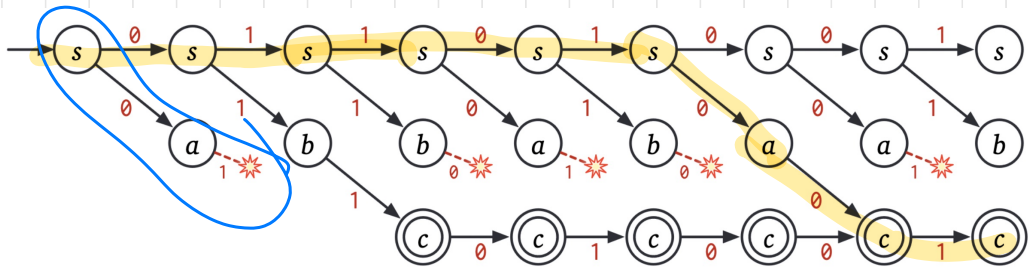

Running our example NFA on the input string 01101001.

- verifiers

Q: set of states

$\{s, a, b, c\}$

$s \in Q$

s

$A \subseteq Q$

$\{c\}$

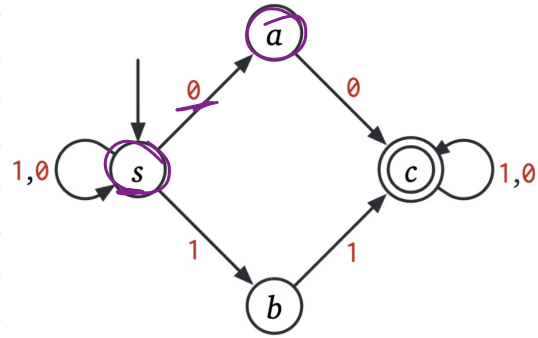

power set of Q, set of all subsets of Q

$\delta : Q \times \Sigma \to \mathcal{P}(Q)$

$\delta(p, c) = \{q, r, \ldots\}$

$\delta(s, 0) = \{s, a\}$

w/ partners:

- what language does this NFA accept? write a reg. exp.

- note that the smallest DFA for this language has 8 states. How would you prove this fact?

(1)

(2)

More NFA options:

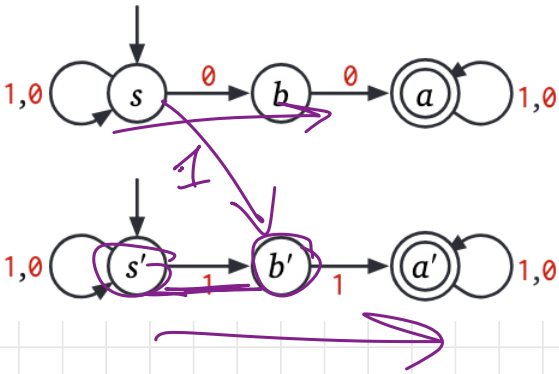

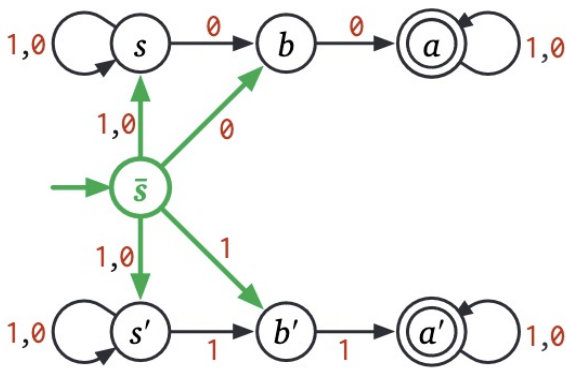

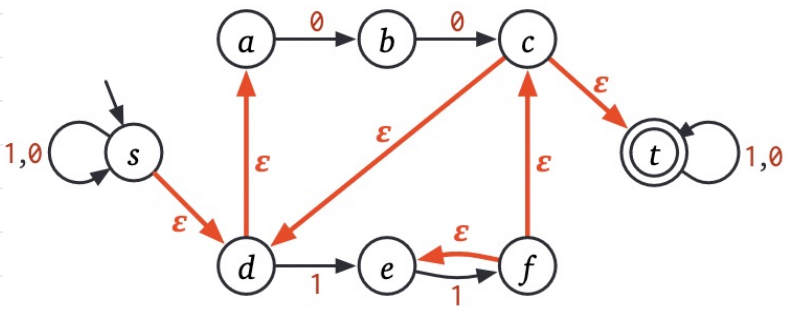

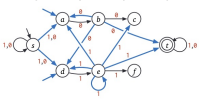
a
b
c
d
e
f
g
0
1
1,0

NFA → DFA via subset construction

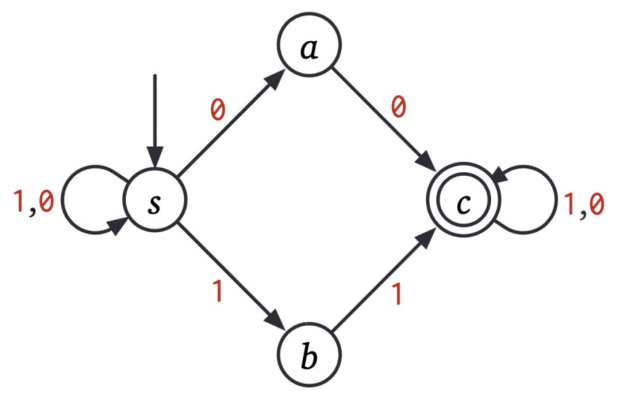

w = 011010001

Given NFA $M = (Q, S, A, \delta)$, define DFA M' as follows:

$$Q' = 2^Q$$

$$S' = \{s\}$$

$$A' = \{q' \subseteq Q : q' \cap A \neq \emptyset\}$$

$$\delta'(q', a) = \bigcup_{q \in q'} \delta(q, a)$$

Language Transformations

recall product construction:

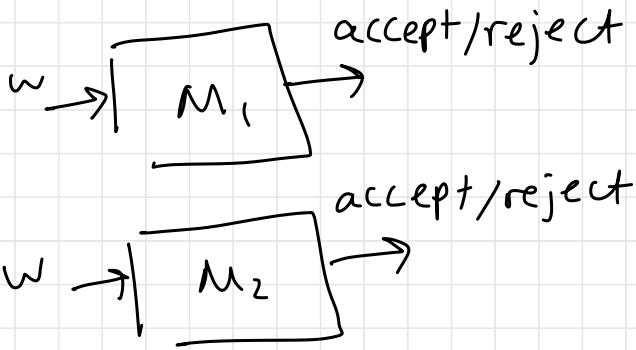

Let $\text{flip}(w) = \begin{cases} \varepsilon & \text{if } w = \varepsilon \\ 1 \cdot \text{flip}(x) & \text{if } w = 0x \\ 0\,\text{flip}(x) & \text{if } w = 1x \end{cases}$