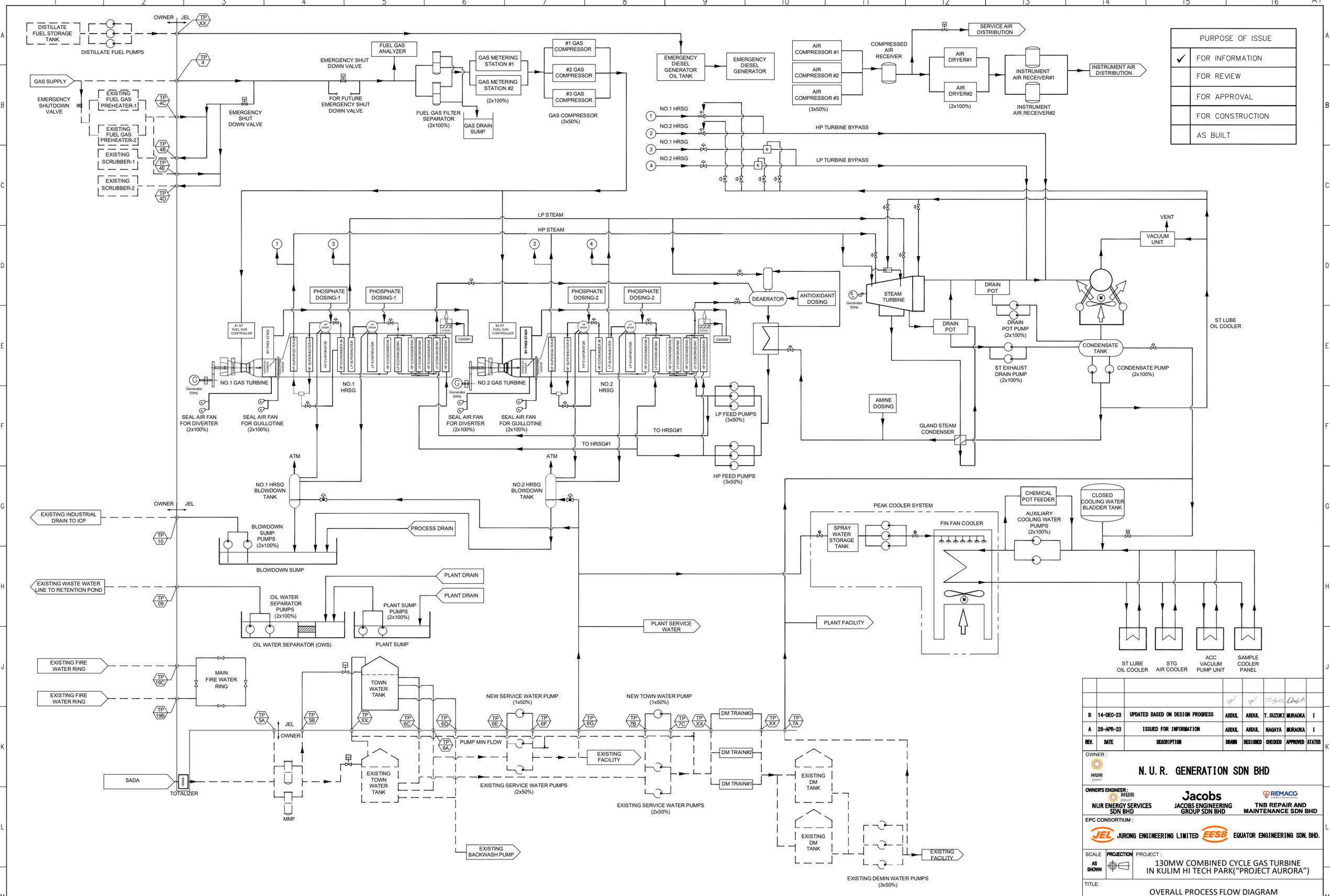

REV.	DATE	DESCRIPTION	DRAWN	DESIGNED	CHECKED	APPROVED	STATUS
B	14-DEC-23	UPDATED BASED ON DESIGN PROGRESS	ABDUL	ABDUL	T. SUZUKI	MURAOKA	I
A	28-APR-23	ISSUED FOR INFORMATION	ABDUL	ABDUL	NAGAYA	MURAOKA	I

OWNER :

N.U.R. GENERATION SDN BHD

OWNER'S ENGINEER :

NUR ENERGY SERVICES SDN BHD

JACOBS ENGINEERING GROUP SDN BHD

TNB REPAIR AND MAINTENANCE SDN BHD

EPC CONSORTIUM :

JURONG ENGINEERING LIMITED

EQUATOR ENGINEERING SDN. BHD.

SCALE: AS SHOWN

PROJECTION

PROJECT : 130MW COMBINED CYCLE GAS TURBINE IN KULIM HI TECH PARK("PROJECT AURORA")

TITLE: OVERALL PROCESS FLOW DIAGRAM

PROJECT DRAWING NO: PAUR-30-YYY-PF-M0001

JOB NO: 20064

REV: B

SHT: 1/1