EDGE CONNECTOR

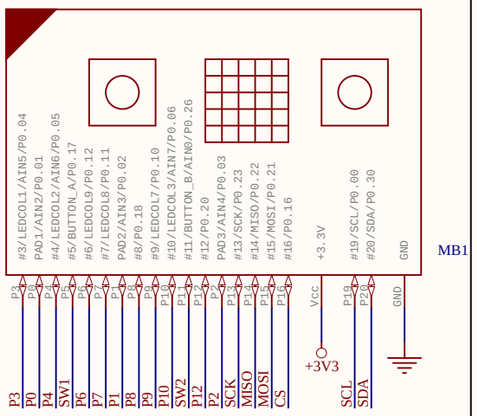

ESP32 MICROCONTROLLER / WIFI MODULE

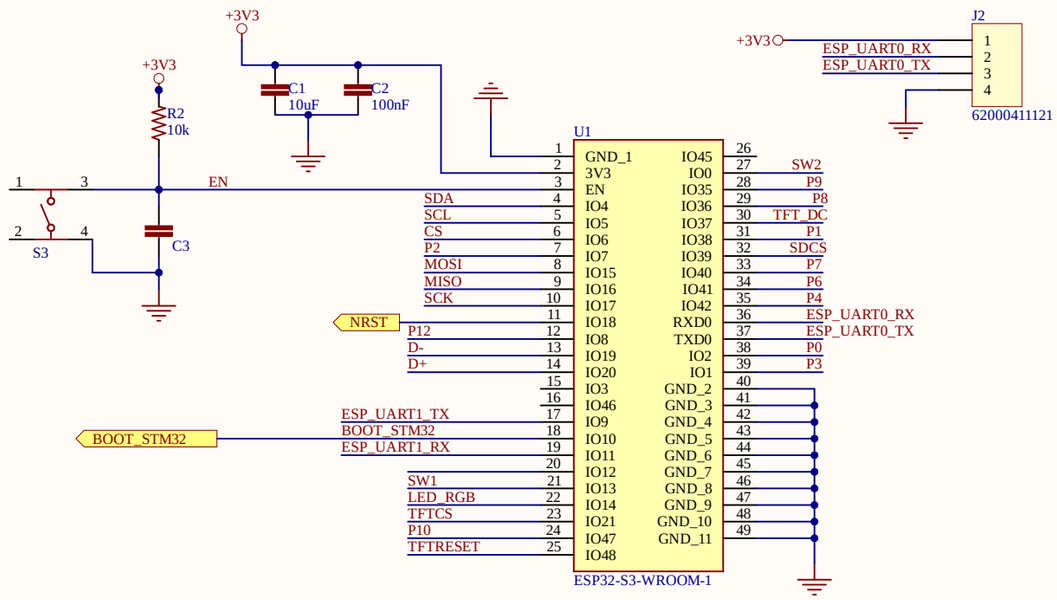

POWER LED

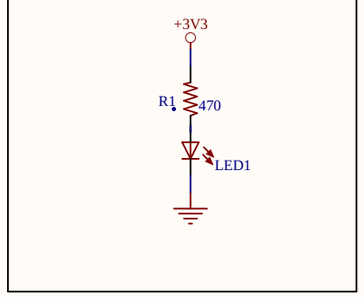

SERIAL - TO STM32

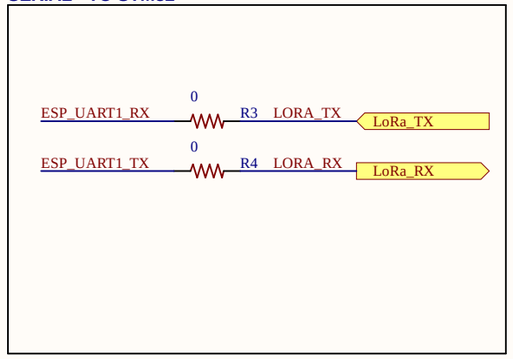

USB CONNECTION/ POWER

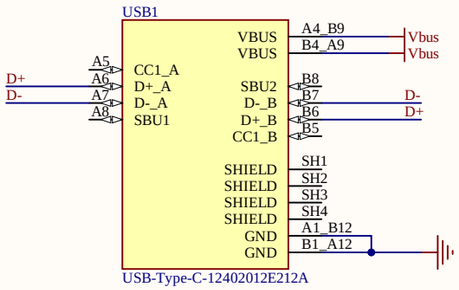

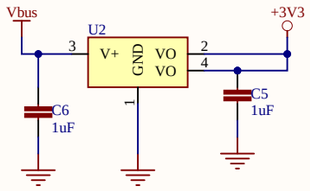

LED/LCD

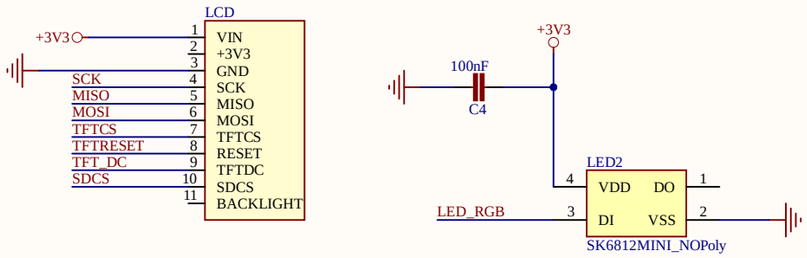

Buttons

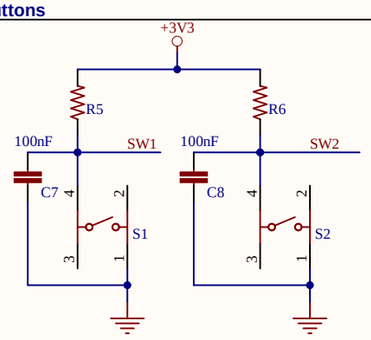

POWER SUPPLY DECOUPLING

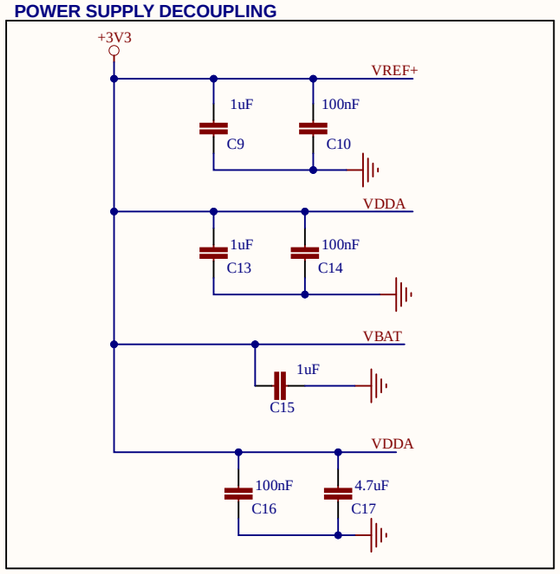

JTAG

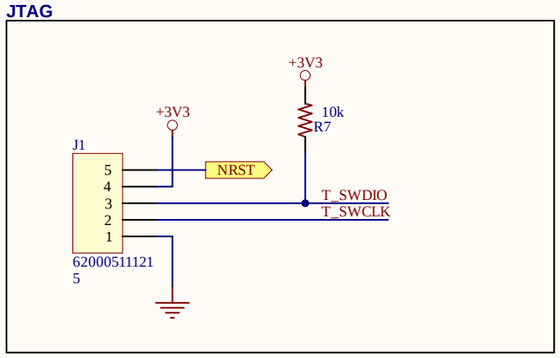

RF FILTER / SWITCH / ANTENNA CONNECTOR

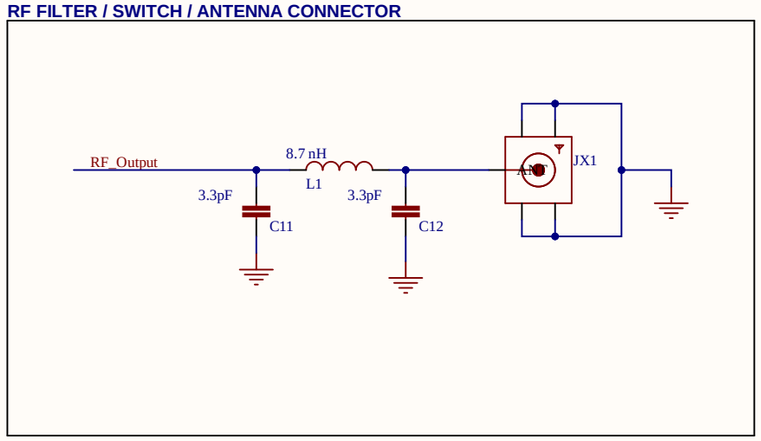

MULTIPROTOCOL LPWAN 32-BIT ARM MICROCONTROLLER

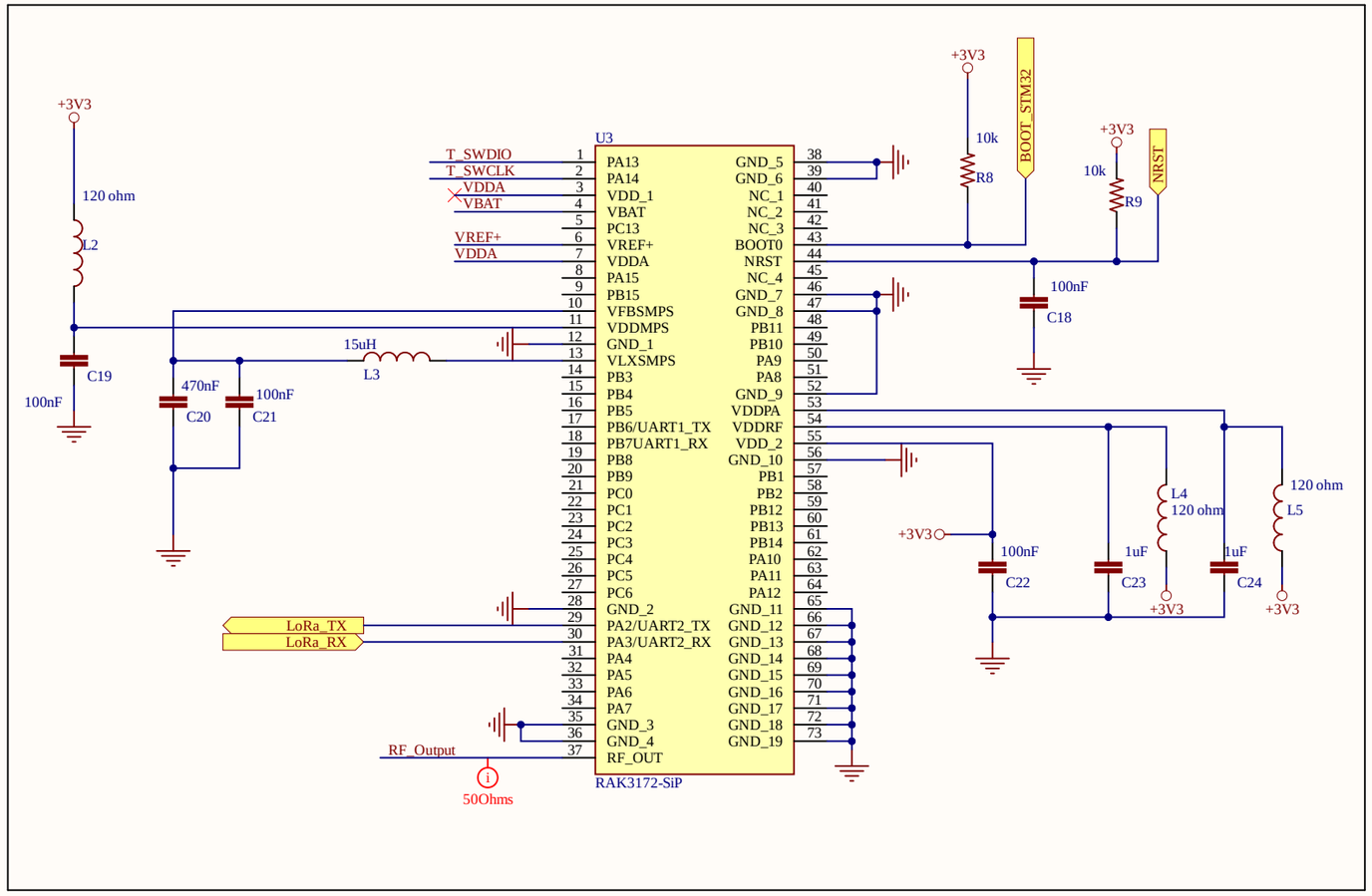

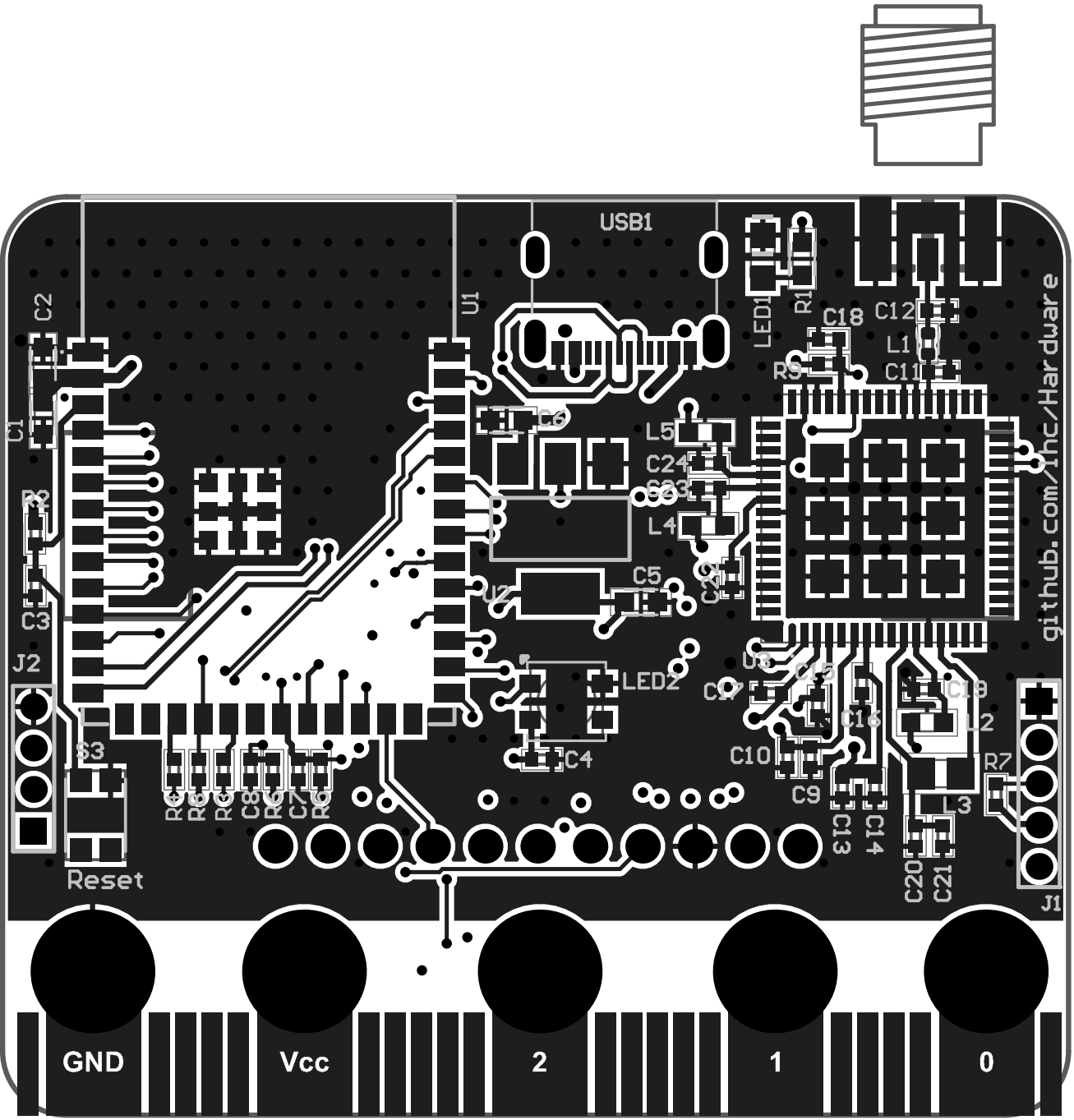
USB1
U1
LED1
R1
C18
C12
L1
C11
R5
C2
C1
C6
L5
C24
C23
L4
R3
C3
C5
U2
C21
J2
LED2
U3
C15
C17
C16
C19
L2
S3
C4
C10
R7
C9
L3
C13
C14
C20
C21
J1
Reset
github.com/ihc/Hardware
GND
Vcc
2
1
0

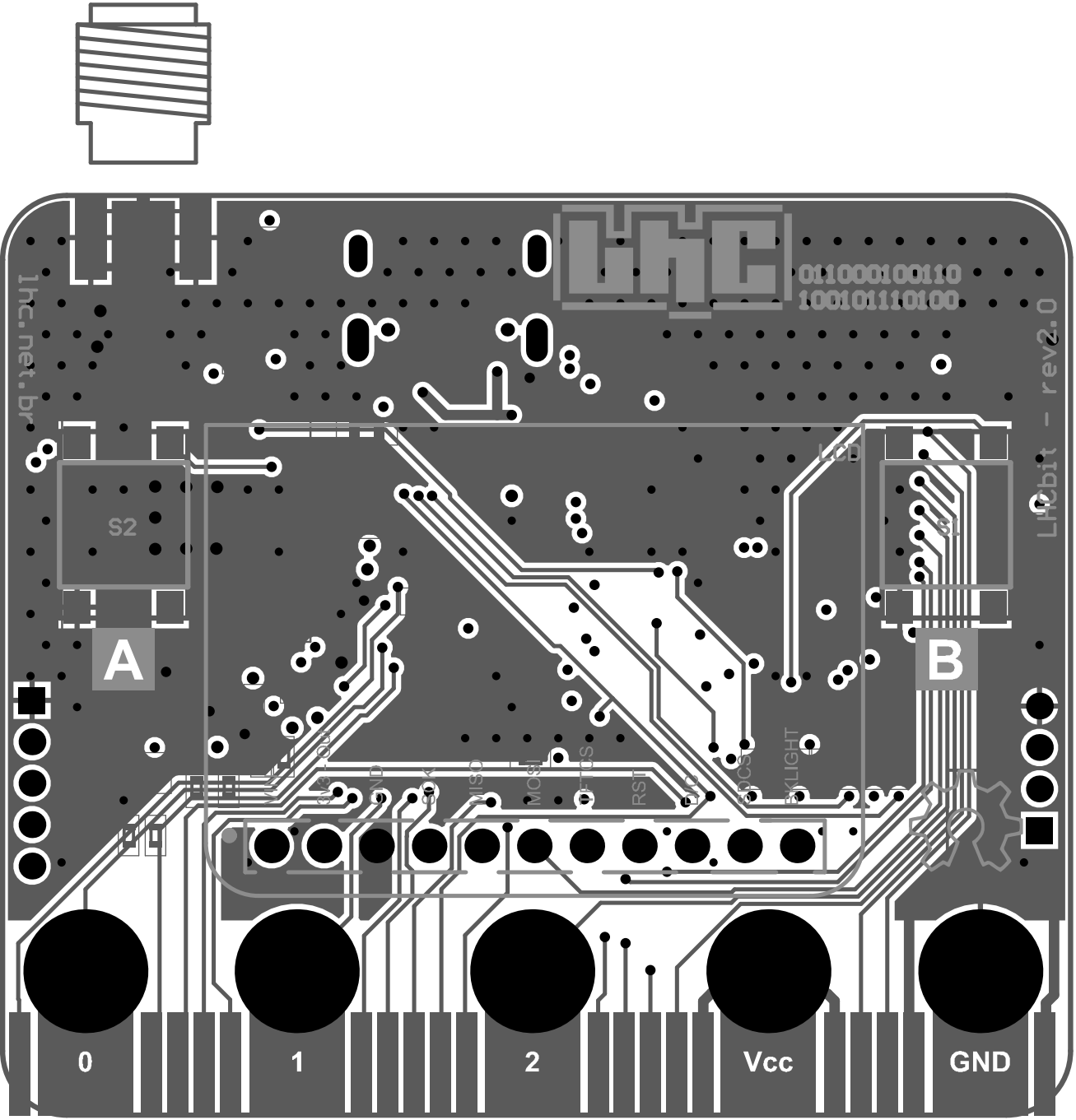
lhc.net.br
LHCbit - rev2.0
S2
A
B
LCD
VCC
CS
GND
SCK
MISO
MOSI
CS
RST
DC
SDCS
BKLIGHT
0
1
2
Vcc
GND