EDGE CONNECTOR

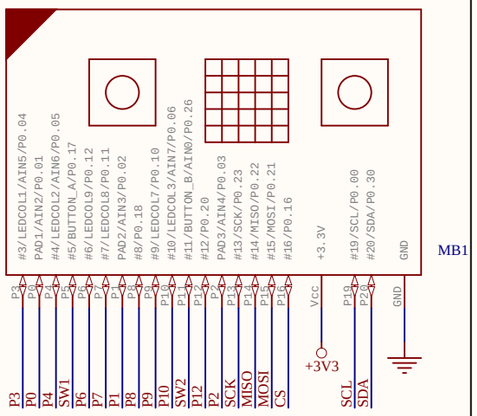

ESP32 MICROCONTROLLER / WIFI MODULE

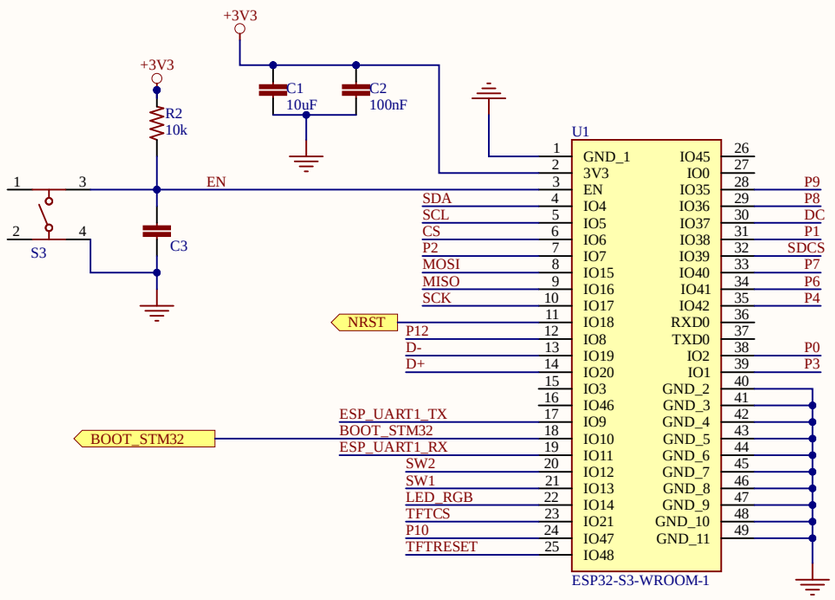

POWER LED

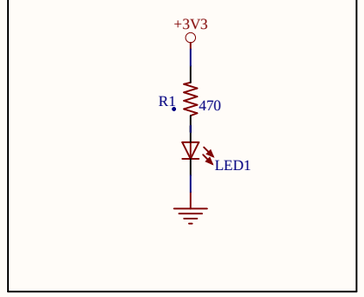

SERIAL - TO STM32

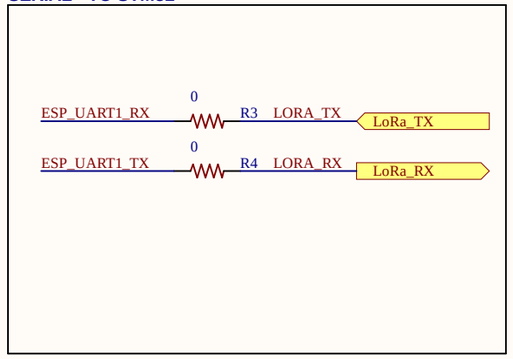

USB CONNECTION/ POWER

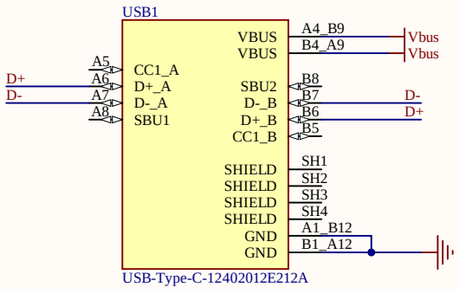

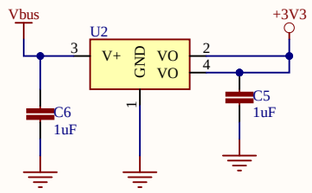

LED/LCD

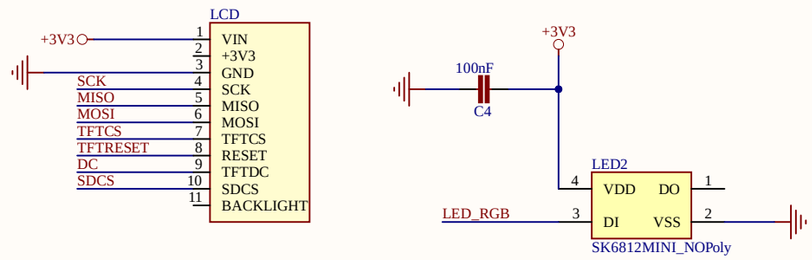

Buttons

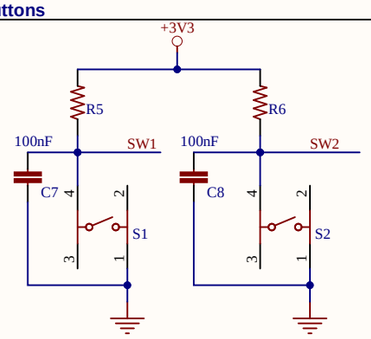

POWER SUPPLY DECOUPLING

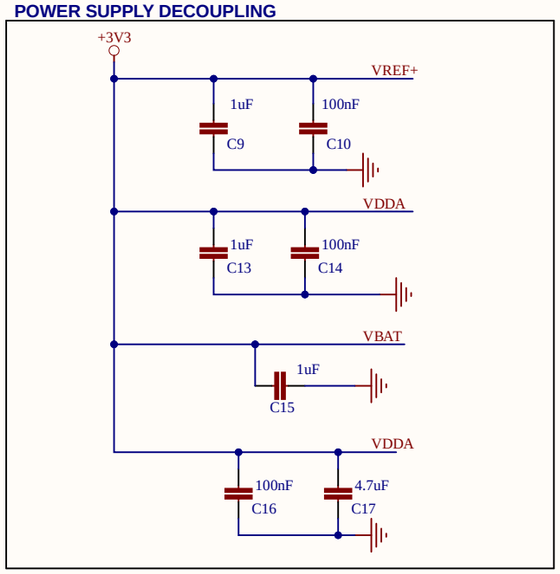

JTAG

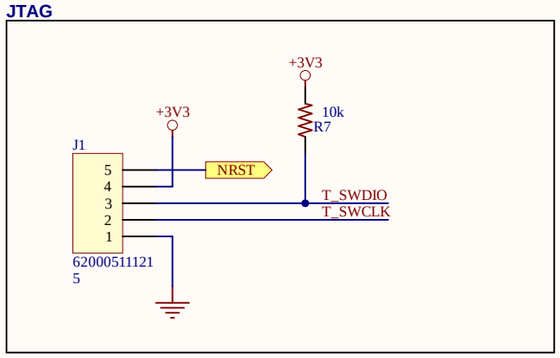

RF FILTER / SWITCH / ANTENNA CONNECTOR

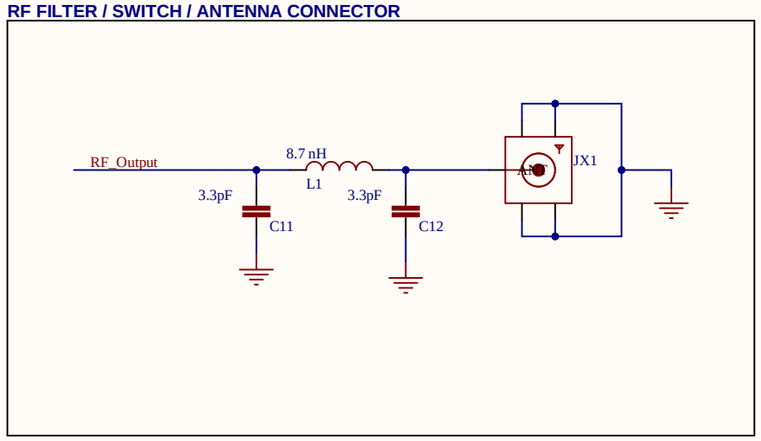

MULTIPROTOCOL LPWAN 32-BIT ARM MICROCONTROLLER

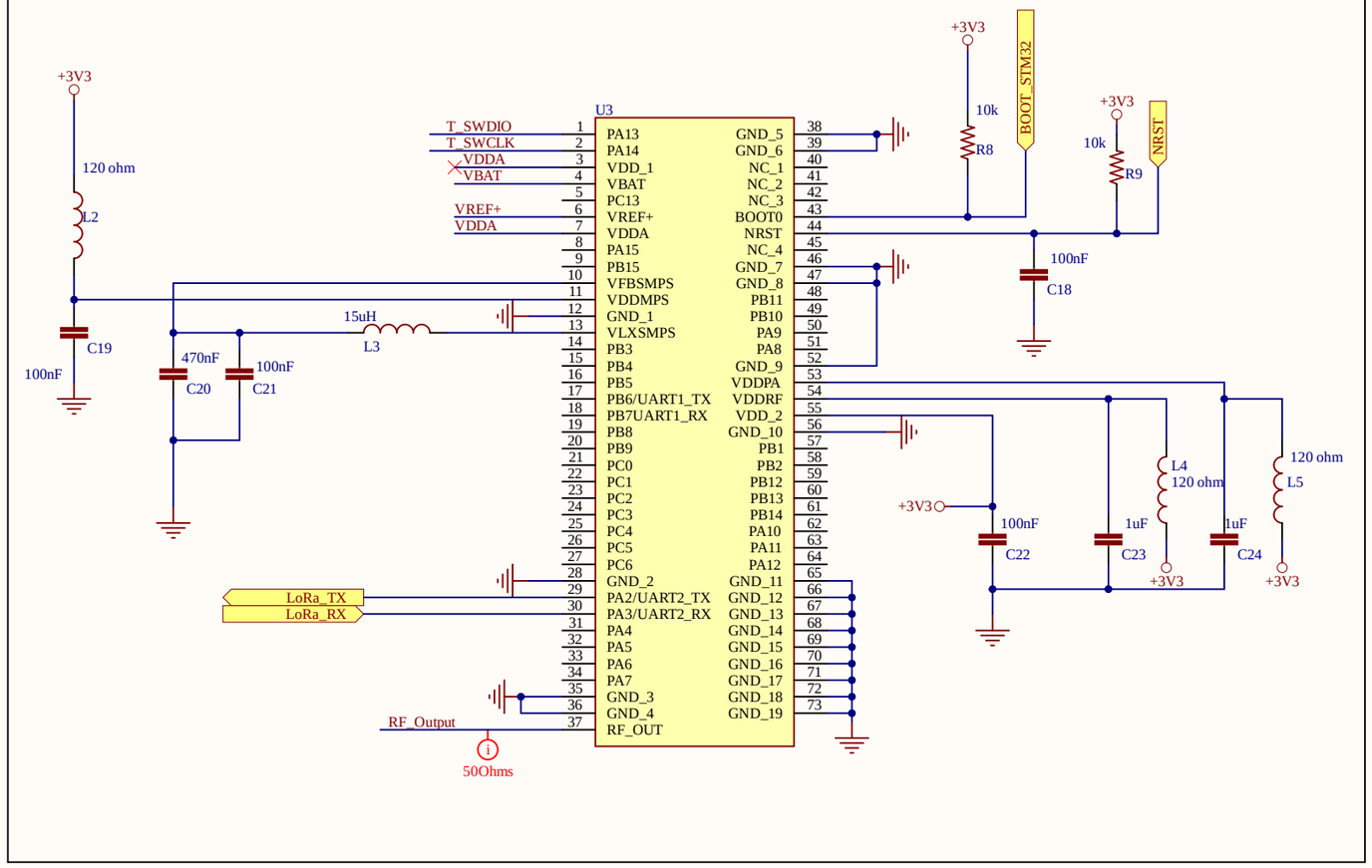

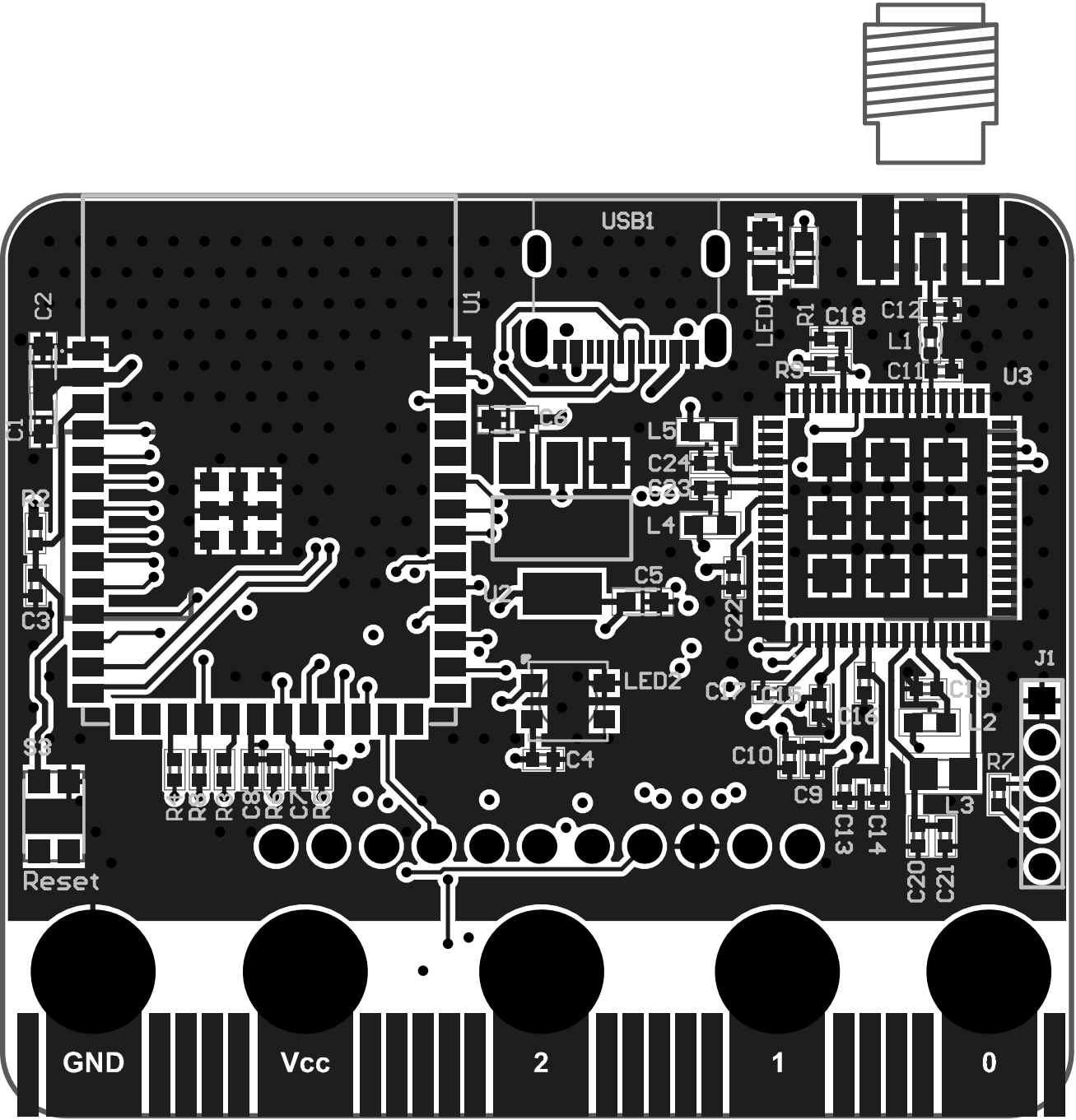
USB1
U1
LED1
R1
C18
C12
L1
R5
C11
U3
C2
C1
C6
L5
C24
C23
L4
R3
C5
U2
C3
C22
J1
LED2
C17
C15
C16
C19
L2
S3
C4
C10
R7
R6
R5
R4
C8
R3
C7
R2
C9
C13
C14
L3
C20
C21
Reset
GND
Vcc
2
1
0

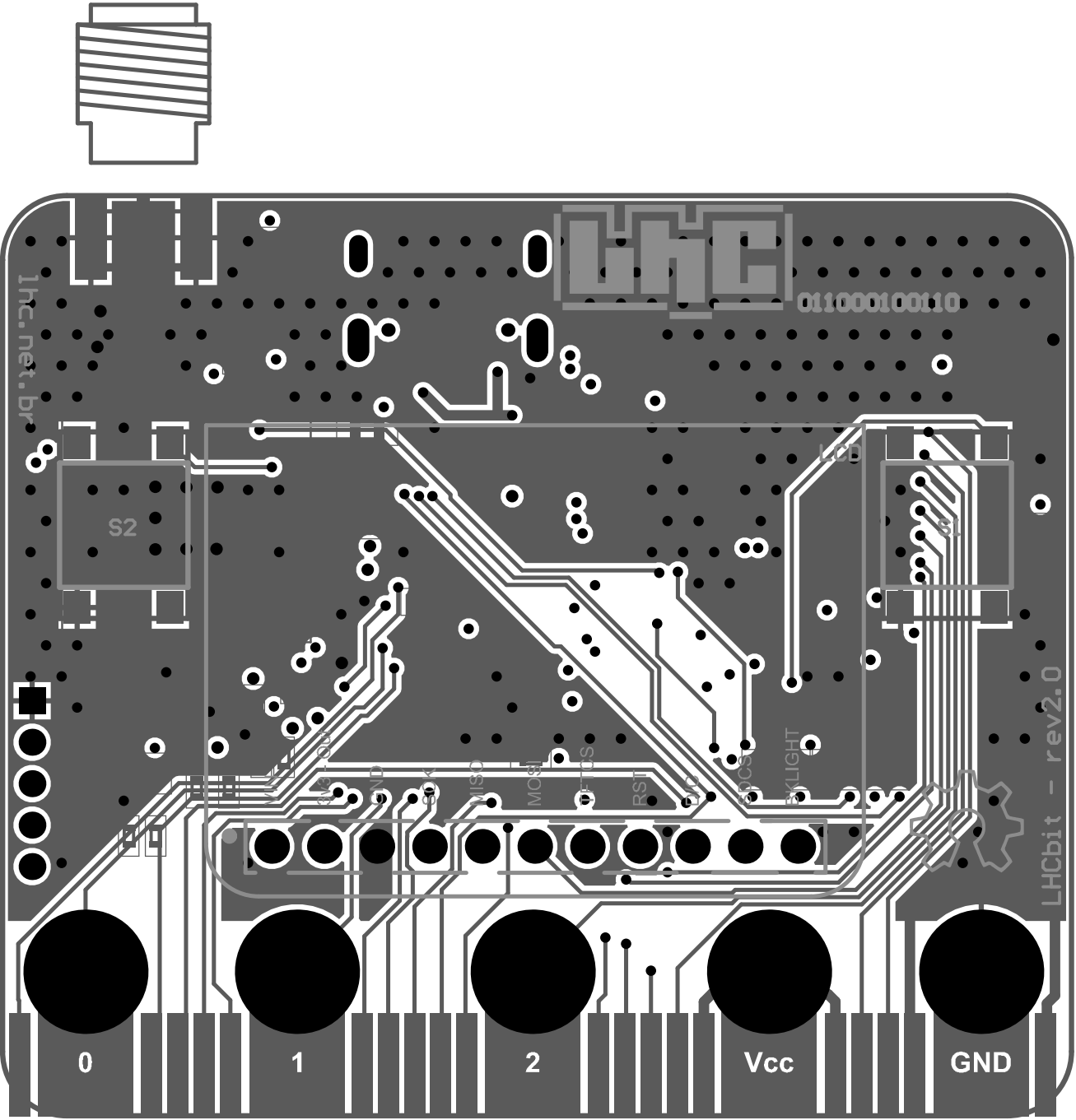
lhc.net.br
01000100110
S2
LCD
S1
CS
GND
SCK
MISO
MOSI
TCS
RST
DC
BOOST
BKLIGHT
LHCbit - rev2.0
0
1
2
Vcc
GND