DATE	DESCRIPTION	REV.
9.20.04	CHANGE AS PER ECN 04–110	F
11.2.11	CHANGE AS PER ECN 11–142	G

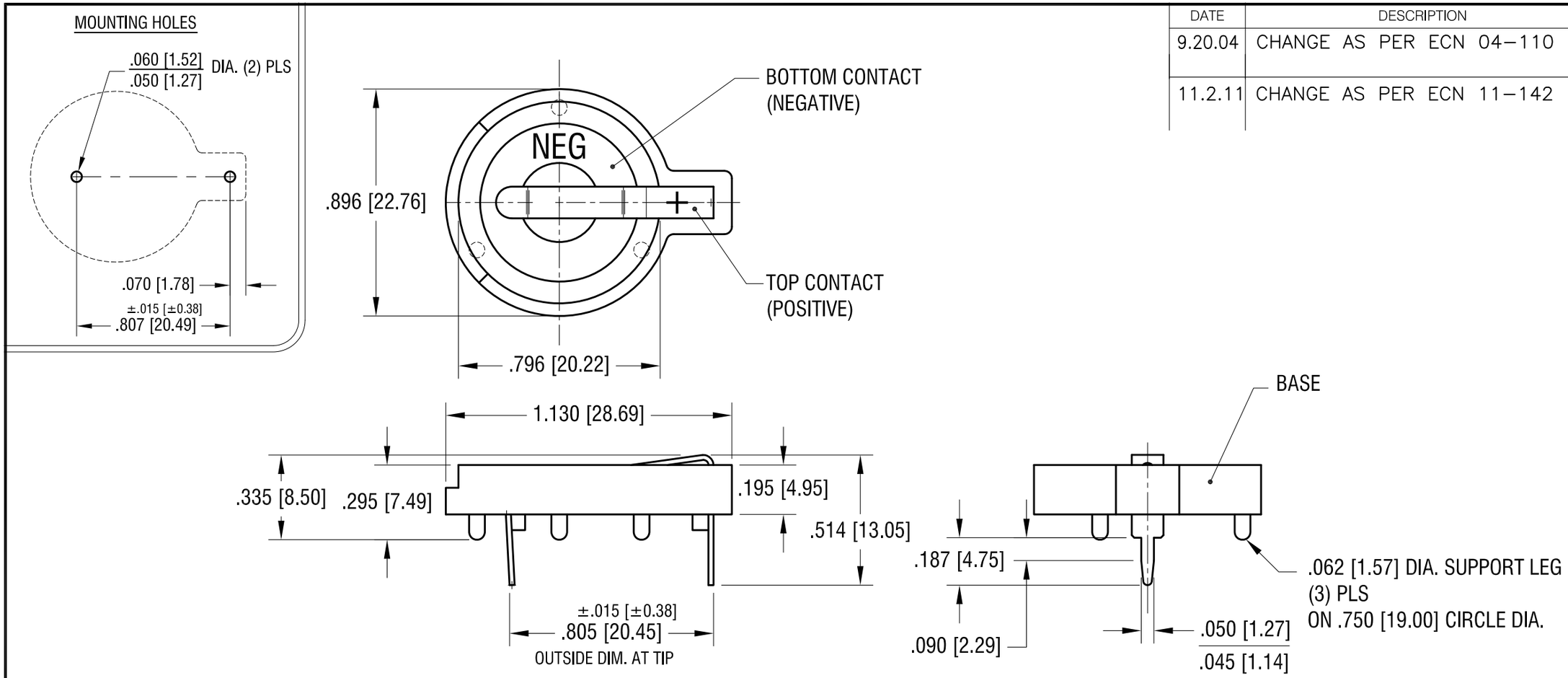

NOTES:

1. BASE:
   MAT'L - PBT (UL 94V-0), COLOR BLACK
2. CONTACTS (TOP AND BOTTOM):
   MAT'L - .020 [0.50] TH'K SPRING STEEL
   FINISH: TIN NICKEL PLATE

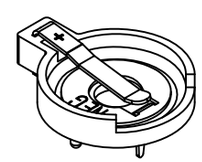

ACTUAL SIZE

THIS DOCUMENT IS THE PROPERTY OF KEYSTONE ELECTRONICS CORP. AND SHALL NOT BE REPRODUCED, DISTRIBUTED OR USED AS A BASIS FOR MANUFACTURE WITHOUT PRIOR WRITTEN PERMISSION FROM KEYSTONE ELECTRONICS CORP.

KEYSTONE ELECTRONICS CORP.

www.keyelco.com • NEW HYDE PARK, NY 11040 • Tel (516) 328-7500

PART NAME: COIN CELL PC BATTERY HOLDER

MATERIAL: AS NOTED

FINISH: AS NOTED

DRN BY: BOONE | DATE: 8.15.84

APP'D: LN | SCALE: 2X

TOLERANCES — INCH [MM]
DECIMAL ± .010 [± 0.25]
ANGULAR ± 1°
UNLESS OTHERWISE SPECIFIED

CODE: C

DWG NO. 103