Multi-Sensor Magnetometer PCB

Design, Operation, and Programming Reference

Luke Hojnicki
Coherent and Quantum Optics Lab
Dr. Elliott, Purdue University

April 27, 2026

Prepared for internal lab use. Intended audience: future lab members and primary user Chunya Wang.

Contents

1 Introduction and Purpose **4**
- 1.1 Background . . . 4
- 1.2 Design Goals . . . 4
- 1.3 Scope of This Document . . . 4

2 System Architecture **5**
- 2.1 Block Diagram . . . 5
- 2.2 Top-Level Schematic . . . 5

3 Component Descriptions **7**
- 3.1 Component Summary . . . 7
- 3.2 MMC5983MA Magnetic Field Sensor . . . 7
  - 3.2.1 Pin Configuration and Connections . . . 7
  - 3.2.2 SET/RESET Coil . . . 8
  - 3.2.3 Fixed I^2C Address and the Multiplexer Requirement . . . 8
- 3.3 TCA9546A I^2C Multiplexer . . . 9
  - 3.3.1 I^2C Address Strapping . . . 9
  - 3.3.2 Channel Select Register . . . 9
  - 3.3.3 Pull-up Resistors . . . 10
  - 3.3.4 Bypass Capacitor . . . 10
  - 3.3.5 RESET Pin . . . 10
- 3.4 LM3940IMPX Voltage Regulator . . . 10
- 3.5 FFC Connector and Daisy-Chain Bus . . . 10
- 3.6 Arduino Nano Every . . . 11

4 Circuit Schematics **12**
- 4.1 Power Distribution . . . 12
- 4.2 I^2C Multiplexer (TCA9546A) . . . 12
- 4.3 MMC5983MA Sensor Instances . . . 13

5 PCB Layout **15**
- 5.1 Board Overview . . . 15
- 5.2 Top and Bottom Copper Layers . . . 16
- 5.3 Board Shape and Functional Regions . . . 16
- 5.4 Sensor Placement Around the Circular Cutout . . . 17
- 5.5 Magnetic Noise Minimization . . . 17

6 Assembly and Setup **19**
- 6.1 Bill of Materials (BOM) . . . 19
- 6.2 Soldering Notes . . . 19
- 6.3 Initial Power-On Checklist . . . 19

7 Two-Board Setup **21**

7.1 Overview . . . 21
7.2 Hardware Modification for Board 1 . . . 21
7.3 FFC Cable Connection . . . 21
7.4 Sensor Numbering Convention . . . 21

8 Programming the Board **23**
8.1 Development Environment . . . 23
8.2 I²C Scanner . . . 23
8.3 Core Firmware Structure . . . 24

9 Reading and Interpreting Data **26**
9.1 Output Format . . . 26
9.2 Unit Conversion . . . 26
9.3 SET/RESET Procedure . . . 26
9.4 Data Collection Workflow (for Chunya) . . . 26

10 Troubleshooting **28**
10.1 Using an Oscilloscope to Debug I²C . . . 28
10.2 Bus Recovery Procedure . . . 29

11 Known Limitations and Future Work **30**

Acknowledgments **31**

A I²C Address Map **32**

B Register Quick Reference **33**

C Gerber File Manifest **33**

List of Figures

1 Full system block diagram. The Arduino Nano Every drives two identical sensor boards (Board 0 and Board 1) via a shared FFC bus. . . . 5
2 Top-level schematic showing FFC connector, TCA9546A, and four MMC5983MA instances (one board). . . . 6
3 Power distribution and FFC connector schematic. U2 (LM3940IMPX) converts +5 V to +3.3 V (VCC). J4 is the input FFC connector; J1 passes signals to the next board in the chain. . . . 12
4 TCA9546AD I²C multiplexer schematic. All pull-ups are 2.7 kΩ to +3.3 V. A0 straps select the board I²C address (see Table 4). . . . 13
5 MMC5983MA sensor schematics. All four instances are identical; each is isolated on its own TCA9546A downstream channel. . . . 14
6 PCB layout rendered from Gerber files. Top layer carries nearly all routing; the bottom layer provides a partial ground plane and return paths. . . . 16

List of Tables

1 Key Components (per board) . . . 7
2 MMC5983MA Key Specifications [1] . . . 7
3 MMC5983MA Pin Assignment (this design) . . . 8
4 TCA9546A Address Strapping per Board . . . 9
5 TCA9546A Channel Select Byte . . . 9
6 FFC Connector Pinout . . . 10
7 Arduino Nano Every Key Specifications . . . 11
8 PCB Fabrication Specifications . . . 15
9 Sensor Positions Around Circular Cutout . . . 17
10 Bill of Materials (one board) . . . 19
11 Full 8-Sensor Addressing Map . . . 22
12 Common Issues and Resolutions . . . 28
13 Complete I^2C Address Map (two-board system) . . . 32
14 MMC5983MA Key Registers . . . 33
15 Gerber File Manifest . . . 33

1 Introduction and Purpose

1.1 Background

This document describes the design, assembly, and operation of the Magnetometer PCB developed for Dr. Elliott's Coherent and Quantum Optics Lab at Purdue University. The board enables simultaneous, high-resolution measurement of magnetic field vectors at multiple spatial positions, which is required for Chunya Wang's experimental work characterizing magnetic field distributions in the lab environment.

The system measures the three-dimensional magnetic field (B_x, B_y, B_z) at up to eight locations using MEMSIC MMC5983MA AMR sensors arranged across two identical PCBs connected in series via a flat flexible cable (FFC). Each board hosts four sensors multiplexed over a single I^2C bus and is controlled by a shared Arduino Nano Every microcontroller.

1.2 Design Goals

- Simultaneous readout of 8 MMC5983MA sensors (4 per board, 2 boards)
- Single Arduino Nano Every host controller over a shared I^2C bus
- On-board 5 V to 3.3 V regulation; boards powered from the Arduino's USB supply
- Daisy-chain expansion via FFC connector (Top-on-One-Side / Bottom-on-the-Other cable type)
- Address conflict resolution between boards via hardware address strapping on the TCA9546A multiplexer
- Minimal magnetic interference from PCB-generated fields (see Section 5)

1.3 Scope of This Document

This document covers: (1) hardware overview and component descriptions, (2) full circuit schematics, (3) PCB layout notes, (4) assembly and setup, (5) programming the board, (6) reading and interpreting sensor data, and (7) troubleshooting. A future student or Chunya should be able to bring the system from unpowered to collecting data using only this document.

2 System Architecture

2.1 Block Diagram

Figure 1 shows the full two-board system. The Arduino Nano Every acts as the I^2C master. Both boards share the same SDA, SCL, RST, +5 V, and +3.3 V lines routed through the FFC connector. Each board contains an LM3940 voltage regulator, one TCA9546A I^2C multiplexer, and four MMC5983MA sensors.

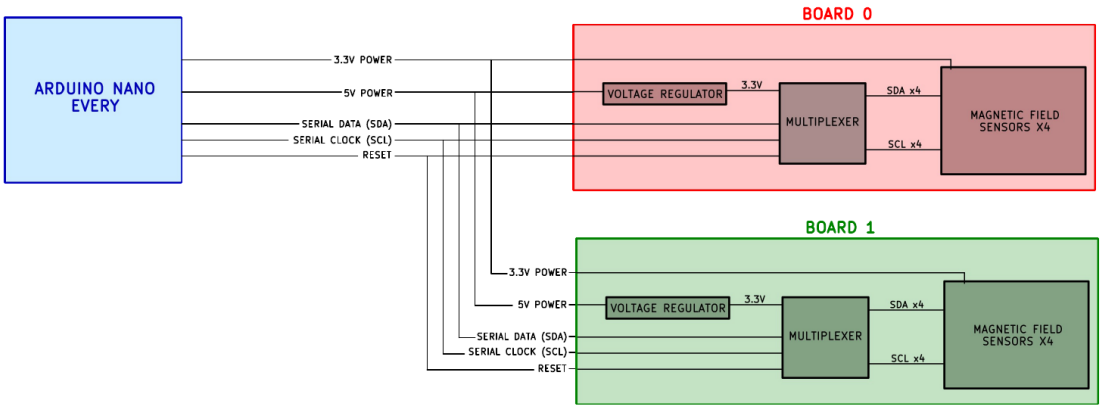

Figure 1: Full system block diagram. The Arduino Nano Every drives two identical sensor boards (Board 0 and Board 1) via a shared FFC bus.

2.2 Top-Level Schematic

Figure 2 shows the top-level KiCad schematic for one board. The FFC connector routes RST, SCL, SDA, and the four mux channel pairs (SC0/SD0 through SC3/SD3) to the TCA9546A sub-sheet and the four MMC sub-sheets. Two mounting holes (H1, H2) are also indicated.

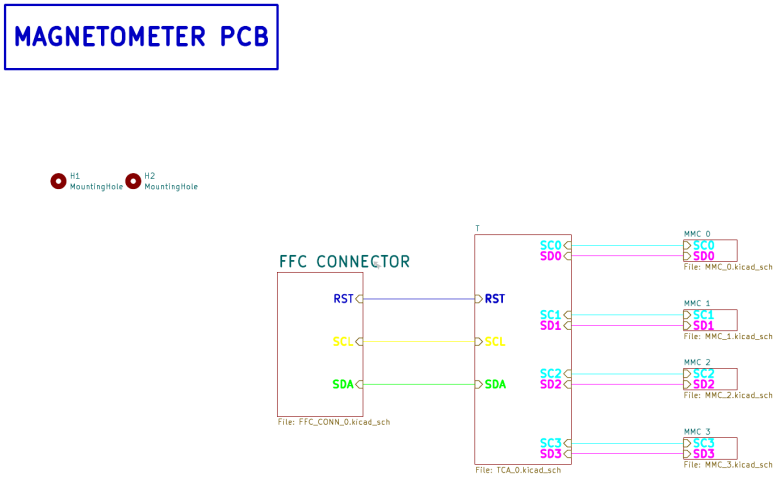

Figure 2: Top-level schematic showing FFC connector, TCA9546A, and four MMC5983MA instances (one board).

3 Component Descriptions

3.1 Component Summary

Table 1: Key Components (per board)

Component	Part Number	Qty	Function
Magnetic field sensor	MMC5983MA	4	3-axis AMR magnetometer
I^2C multiplexer	TCA9546AD	1	4-channel bus switch
Voltage regulator	LM3940IMPX	1	5 V → 3.3 V LDO
FFC connector (in/out)	*[PN]*	2	Board-to-board bus
Bulk output cap	33 µF	1	LDO output decoupling
Mux bypass cap	10 µF	1	TCA9546A VCC
Sensor VDD bypass cap	1 µF	4	MMC5983MA VDD
Sensor CAP bypass cap	10 µF	4	MMC5983MA CAP pin
I^2C pull-up resistors	2.7 kΩ	11	All SDA/SCL lines

3.2 MMC5983MA Magnetic Field Sensor

The MMC5983MA (MEMSIC) is a 3-axis anisotropic magnetoresistance (AMR) magnetic field sensor housed in a 2.0 × 2.0 × 1.0 mm LGA-16 package. It measures B_x, B_y, and B_z simultaneously and communicates over I^2C at a single fixed address of `0x30`. Key specifications are listed in Table 2.

Table 2: MMC5983MA Key Specifications [1]

Parameter	Value	Notes
Supply voltage (VDD)	1.71–3.6 V	
Full-scale range	±8 G	
Resolution (18-bit mode)	0.0625 mG/LSB	18-bit output
RMS noise	0.4 mG (typ.)	Continuous mode
Output data rate	up to 1000 Hz	
I^2C address	`0x30` (fixed)	
Operating temperature	−40 to +85 °C	
Package	LGA-16, 2.0 × 2.0 mm	

3.2.1 Pin Configuration and Connections

In this design the MMC5983MA is used exclusively in I^2C mode. Table 3 lists the relevant pin assignments; SPI-only pins (SPL_CS, SPL_SDO) are left unconnected (NC).

Table 3: MMC5983MA Pin Assignment (this design)

Pin	Name	Connected to	Notes
1	SCL/SPL_SCK	SCx (from mux channel)	I^2C clock
2	VDD	+3.3 V via 1 µF cap	Supply
3	NC	—	
4	NC	—	
5	SPL_CS	NC	SPI not used
6	SPL_SDO	NC	SPI not used
7–8	NC	—	
9	GND	GND	
10	CAP	GND via 10 µF	Internal charge pump ref
11	GND	GND	
12	NC	—	
13	VDDIO	+3.3 V	I/O voltage
14	NC	—	
15	INT	NC	Interrupt not used
16	SDA/SPL_SDI	SDx (from mux channel)	I^2C data

3.2.2 SET/RESET Coil

The MMC5983MA contains an on-chip SET/RESET coil that drives a large current pulse through the sensing element to re-magnetize the Permalloy film in a known direction. This is necessary because:

- **SET** magnetizes the film in the "positive" direction, establishing a known reference state and removing any negative offset from strong external field exposure.
- **RESET** magnetizes the film in the opposite direction. Taking the difference of a SET and RESET measurement, $B = (B_{\text{SET}} - B_{\text{RESET}})/2$, cancels the temperature-dependent bridge offset, substantially improving accuracy.

A SET or RESET pulse is issued by writing the corresponding bit in the `CONTROL_0` register (`0x09`). The firmware must wait at least 1 µs after the pulse before issuing a measurement command. See Section 9.3 for the recommended procedure.

3.2.3 Fixed I^2C Address and the Multiplexer Requirement

Because all MMC5983MA devices share the fixed I^2C address `0x30`, placing more than one sensor on a single bus causes address collisions. The TCA9546A multiplexer resolves this by isolating each sensor on its own switched bus segment, presenting only one sensor to the master at a time.

3.3 TCA9546A I²C Multiplexer

The TCA9546AD (Texas Instruments) is a low-voltage 4-channel I²C bus switch in a VSSOP-10 package. It sits between the Arduino Nano Every (I²C master) and the four MMC5983MA sensors, enabling the master to address each sensor individually by enabling only one downstream channel at a time.

3.3.1 I²C Address Strapping

The TCA9546A I²C address is determined by the logic levels on address pins A0–A2 (pins 1, 2, 13 in the schematic). The base address is `0b1110_xxx` where `xxx = A2A1A0`, giving the range `0x70`–`0x77`.

On this board, A2 and A1 are tied to GND. A0 is the address differentiation pin used to distinguish Board 0 from Board 1:

Table 4: TCA9546A Address Strapping per Board

Board	A2	A1	A0	I²C Address
Board 0	GND	GND	GND	`0x70`
Board 1	GND	GND	VCC	`0x71`

Important: Both boards ship with A0 tied to GND (`0x70`). When connecting two boards in series, the A0 pin on Board 1's TCA9546A must be moved from GND to VCC to assign it address `0x71`. This is a solder bridge or jumper change on the board. See Section 7 for the two-board setup procedure.

3.3.2 Channel Select Register

The TCA9546A is controlled by writing a single byte to its I²C address. Bits [3:0] enable channels 0–3 respectively; only one bit should be set at a time. Writing `0x00` disconnects all channels (recommended after each read to prevent bus contention).

Table 5: TCA9546A Channel Select Byte

Channel	Byte (hex)	Sensor
0	`0x01`	U4 / MMC_0
1	`0x02`	U3 / MMC_1
2	`0x04`	U5 / MMC_2
3	`0x08`	U6 / MMC_3
None	`0x00`	All disconnected

3.3.3 Pull-up Resistors

Each I^2C segment has dedicated pull-up resistors to +3.3 V. The values used are 2.7 kΩ throughout (R1–R11), consistent with 400 kHz Fast-Mode operation at the expected bus capacitances. Specifically:

- R1, R2, R3: upstream SDA, SCL, and one additional line
- R4/R5, R6/R7, R8/R9, R10/R11: downstream SDA/SCL pairs for channels 0–3 (SD0/SC0 through SD3/SC3)

3.3.4 Bypass Capacitor

A 10 µF capacitor (C1) is placed on the TCA9546A VCC pin for bulk decoupling.

3.3.5 RESET Pin

The TCA9546A `/RESET` pin is connected to the RST net from the FFC connector, which is driven by the Arduino Nano Every. Asserting this pin low disconnects all channels and resets the channel select register to `0x00`. This allows the firmware to perform a hardware bus reset without power-cycling the entire board.

3.4 LM3940IMPX Voltage Regulator

The LM3940IMPX (U2) is a low-dropout (LDO) linear regulator that converts the 5 V supply from the Arduino Nano Every USB rail to the 3.3 V required by the TCA9546A and MMC5983MA sensors. A 33 µF output capacitor (C2) provides output stabilization and transient suppression as specified in the LM3940 datasheet. Both GND pins of the regulator are connected to the board ground plane. **Do not power the sensor VDD from the Arduino's 5 V pin directly.**

3.5 FFC Connector and Daisy-Chain Bus

Each board has two FFC connectors (J4 PIN_IN, J1 PIN_OUT) for daisy-chain expansion. The 16-pin connector carries the following signals:

Table 6: FFC Connector Pinout

Pin(s)	Signal	Notes
1, 2, 15, 16	GND	Ground
3	+5V	Arduino USB rail
7	SCL	I^2C clock (shared bus)
10	SDA	I^2C data (shared bus)
12	RST	Active-low mux reset
14	+3.3V	Regulated output from LM3940
4–6, 8–9, 11, 13	NC	Not connected

Cable orientation note: The FFC cable used in this system is of the "Top-on-One-Side, Bottom-on-the-Other" (Type B) variety. This means the contacts on one end face up and the contacts on the other end face down. Ensure the cable is inserted into each connector in the correct orientation to avoid a pin-reversal short. When connecting Board 0 PIN_OUT to Board 1 PIN_IN, verify that power and signal nets align before applying power.

3.6 Arduino Nano Every

The Arduino Nano Every serves as the I^2C master and USB-serial interface. It is based on the ATmega4809 microcontroller, operates at 20 MHz, and provides 3.3 V-compatible I/O.

Table 7: Arduino Nano Every Key Specifications

Parameter	**Value**
Microcontroller	ATmega4809
CPU speed	20 MHz
Flash / SRAM	48 kB / 6 kB
I^2C pins	A4 (SDA), A5 (SCL)
I^2C speed	Standard (100 kHz) / Fast (400 kHz)
USB interface	USB CDC via SAMD11 co-processor

The Nano Every's A4/A5 pins connect to the shared SDA/SCL bus. A digital output pin connects to the RST net for hardware mux resets. The board is powered from USB; the on-board 3.3 V regulator output is also forwarded to the sensor boards via the FFC connector.

Upload instructions: select **Arduino Nano Every** under *Tools* → *Board* → *Arduino megaAVR Boards*, set *Registers Emulation* to **None (ATMEGA4809)**, select the correct COM port, and click Upload.

4 Circuit Schematics

4.1 Power Distribution

Figure 3 shows the power and connector schematic. The LM3940IMPX (U2) receives +5 V from the FFC connector (J4 PIN_IN, pin 3) and outputs +3.3 V (VCC net) stabilized by a 33 µF capacitor (C2). The regulated +3.3 V is also forwarded to the PIN_OUT connector (J1) so that it is available to downstream boards in the daisy chain. SCL, SDA, RST, and GND are passed through both connectors unchanged.

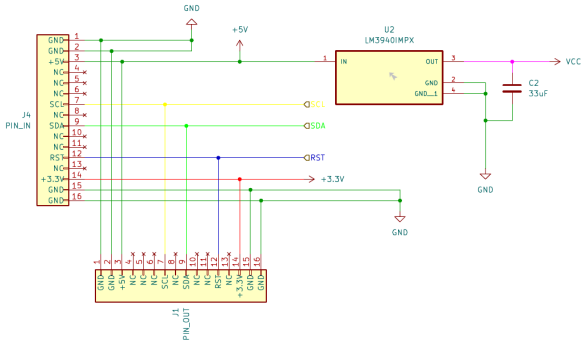

Figure 3: Power distribution and FFC connector schematic. U2 (LM3940IMPX) converts +5 V to +3.3 V (VCC). J4 is the input FFC connector; J1 passes signals to the next board in the chain.

4.2 I²C Multiplexer (TCA9546A)

Figure 4 shows the TCA9546A multiplexer schematic. The upstream SDA and SCL lines from the FFC connector enter pins 15 and 14 of U1 respectively, with 2.7 kΩ pull-ups (R1–R3) to VCC. Each of the four downstream channel pairs (SD0/SC0 through SD3/SC3) has

its own 2.7 kΩ pull-up pair to +3.3 V (R4–R11). Address pins A2 and A1 (pins 13 and 2) are tied to GND; A0 (pin 1) determines the board address (GND = `0x70`, VCC = `0x71`). The RESET pin (pin 3) is driven by the RST net from the FFC connector.

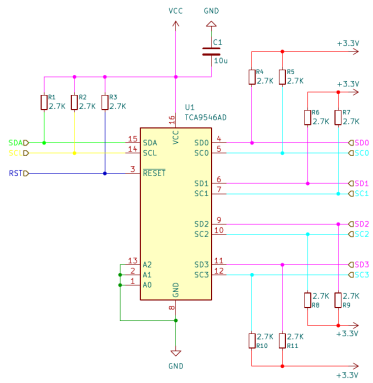

Figure 4: TCA9546AD I^{2}C multiplexer schematic. All pull-ups are 2.7 kΩ to +3.3 V. A0 straps select the board I^{2}C address (see Table 4).

4.3 MMC5983MA Sensor Instances

All four sensors per board are identical circuits; they differ only in which mux channel they connect to (SC0/SD0 through SC3/SD3). Each sensor has: a 1 µF bypass capacitor on VDD (pins C5, C3, C7, C9 for sensors 0–3) and a 10 µF capacitor on the CAP pin (C6, C4, C8, C10) to GND, as required by the MMC5983MA datasheet. SPL_CS and SPL_SDO are left unconnected to select I^{2}C mode. The INT pin is not connected as interrupt- driven acquisition is not used in this implementation.

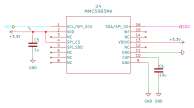

(a) U4 / MMC_0 (channel 0, SC0/SD0)

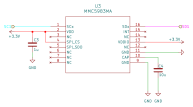

(b) U3 / MMC_1 (channel 1, SC1/SD1)

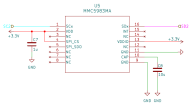

(c) U5 / MMC_2 (channel 2, SC2/SD2)

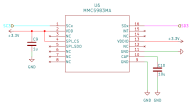

(d) U6 / MMC_3 (channel 3, SC3/SD3)

Figure 5: MMC5983MA sensor schematics. All four instances are identical; each is isolated on its own TCA9546A downstream channel.

5 PCB Layout

5.1 Board Overview

The PCB measures **50.05 mm × 120.05 mm** and uses a **2-layer stackup** (F_Cu / B_Cu) on a standard 1.6 mm FR4 substrate. It was designed in KiCad 10.0.1. The board outline has a distinctive hourglass profile: a wider octagonal control section at the top, a narrow routing neck in the middle, and a wider octagonal sensor section at the bottom with a large circular cutout at its center.

Table 8: PCB Fabrication Specifications

Parameter	**Value**
Board dimensions	50.05 mm × 120.05 mm
Layer count	2 (F_Cu top, B_Cu bottom)
Board thickness	1.6 mm
Min trace width	0.3 mm
Pad-to-pad clearance	0.2 mm
Pad-to-track clearance	0.2 mm
Surface finish	*[HASL / ENIG / specify]*

5.2 Top and Bottom Copper Layers

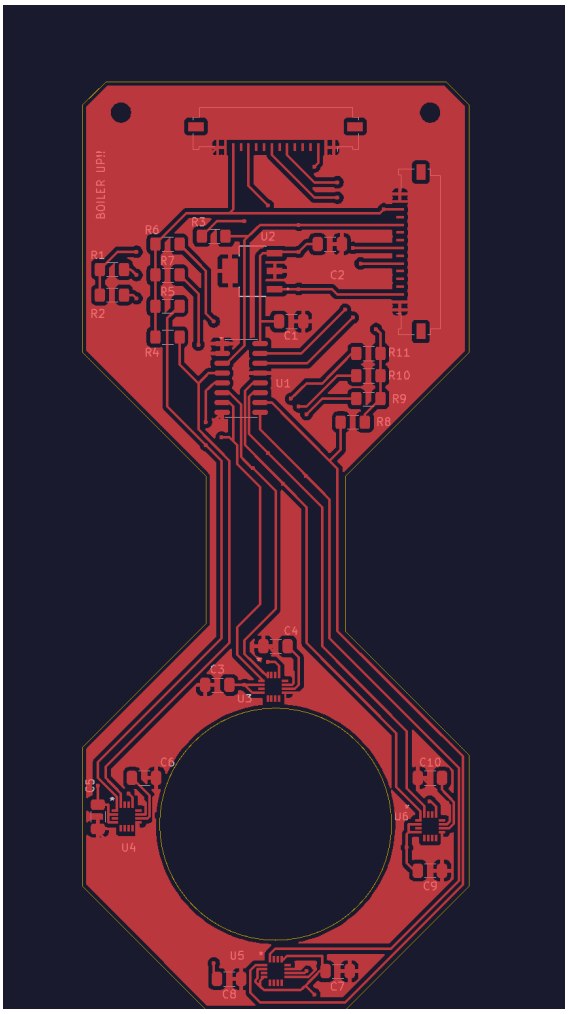

(a) Top copper (F_Cu, red) with silkscreen.

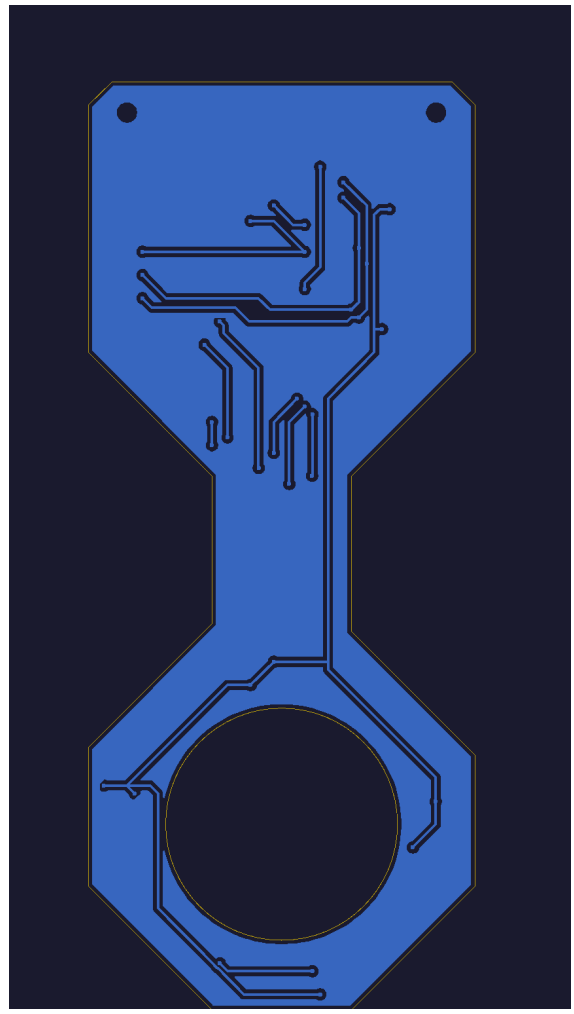

(b) Bottom copper (B_Cu, blue).

Figure 6: PCB layout rendered from Gerber files. Top layer carries nearly all routing; the bottom layer provides a partial ground plane and return paths.

5.3 Board Shape and Functional Regions

The board is divided into three functional regions:

1. **Control section (top octagon):** Houses the two FFC connectors, the LM3940IMPX regulator (U2) with its 33 µF output cap (C2), the TCA9546A multiplexer (U1) with its 10 µF bypass cap (C1), and all 11 pull-up resistors (R1–R11). Two mounting holes are located at the top corners of this section.

2. **Routing neck (center):** A narrow bridge carrying the eight I^2C channel traces (SD0–SD3, SC0–SC3) from the multiplexer to the sensor section. Keeping these traces confined to the neck minimizes the copper area in the magnetically sensitive sensor

region.

3. **Sensor section (bottom octagon):** Contains the four MMC5983MA sensors (U3–U6) and their associated bypass capacitors (C3–C10), arranged around a large circular cutout (approximately 30 mm radius / 60 mm diameter). The cutout allows the board to be mounted concentrically around a cylindrical experimental object such as a glass cell or optical tube.

5.4 Sensor Placement Around the Circular Cutout

The four sensors are positioned at the cardinal points of the circular cutout to provide spatially distributed field measurements around the mounted object:

Table 9: Sensor Positions Around Circular Cutout

Ref.	Channel	Clock position	Notes
U3	1 (SC1/SD1)	12 o'clock (top)	
U4	0 (SC0/SD0)	9 o'clock (left)	
U6	3 (SC3/SD3)	3 o'clock (right)	
U5	2 (SC2/SD2)	6 o'clock (bottom)	

Each sensor is oriented with its package aligned to the board axes. If absolute field direction relative to the mounted object is required, the orientation of each sensor's X, Y, Z axes relative to the board frame should be recorded when installing the board in the experimental apparatus.

5.5 Magnetic Noise Minimization

The following layout decisions were made to minimize PCB-generated magnetic interference at the sensor locations:

- **Functional isolation:** All active components that carry significant current (regulator, mux, connectors) are confined to the control section, physically separated from the sensors by the narrow neck. This puts the largest current loops as far as possible from the sensor LGAs.
- **Bypass cap proximity:** Each sensor's 1 µF VDD cap and 10 µF CAP pin cap are placed immediately adjacent to the sensor pads, minimizing the loop area of high-frequency switching currents.
- **No ferromagnetics near sensors:** All passive components in the sensor section are ceramic capacitors; no inductors or ferrite-core components are placed in the bottom octagon.
- **Trace routing in neck:** The I^2C channel traces are bundled tightly through the neck and routed as differential-pair-like groups (SDA/SCL per channel adjacent) to reduce loop area and radiated field.

- **Silkscreen note:** The board carries a "BOILER UP!!" silkscreen label on the control section — this is cosmetic only and has no electrical significance.

6 Assembly and Setup

6.1 Bill of Materials (BOM)

Table 10: Bill of Materials (one board)

Ref.	Value / PN	Qty	Function	Supplier
U1	TCA9546AD	1	I^2C mux	*[TI / Digikey]*
U2	LM3940IMPX	1	5V→3.3V LDO	*[TI / Digikey]*
U3–U6	MMC5983MA	4	3-axis sensor	*[MEMSIC / Digikey]*
J1, J4	FFC 16-pin	2	Board connector	*[PN]*
C1	10 µF	1	TCA VCC bypass	*[PN]*
C2	33 µF	1	LDO output cap	*[PN]*
C3, C5, C7, C9	1 µF	4	Sensor VDD bypass	*[PN]*
C4, C6, C8, C10	10 µF	4	Sensor CAP pin	*[PN]*
R1–R11	2.7 kΩ	11	I^2C pull-ups	*[PN]*
H1, H2	Mounting hole	2	Mechanical	—

6.2 Soldering Notes

- The MMC5983MA and TCA9546AD are LGA/VSSOP packages that require reflow soldering. Hand-soldering is possible for the VSSOP but not recommended for the LGA sensors.
- Apply flux generously under LGA pads before placing components.
- After reflow, inspect all sensor and mux connections with a microscope or loupe. Tombstoned or bridged pads will cause I^2C failures.
- The LM3940IMPX is a through-hole or SMD package (verify footprint); solder last to avoid heat damage to nearby sensors.

6.3 Initial Power-On Checklist

1. **Before connecting the Arduino:** Measure the +3.3 V output of U2 with a DMM. It should read 3.3 V ± 0.1 V. If it reads 0 V or 5 V, check U2 orientation and C2 polarity.
2. Verify that SDA and SCL have 3.3 V pull-ups by measuring them at rest (should read ≈ 3.3 V with no activity).
3. Connect the Arduino and upload the I^2C scanner sketch (Section 8.2).
4. Confirm that `0x70` (Board 0 mux) appears in the scan. If running two boards, also confirm `0x71` (Board 1 mux).
5. Select each mux channel in turn and verify that `0x30` (MMC5983MA) appears on each channel. Eight total hits expected for the two-board system.

6. Run the test firmware and confirm plausible field readings (±ambient Earth field, roughly 0.2–0.6 G depending on orientation).

7 Two-Board Setup

7.1 Overview

Two identical boards are connected in series via an FFC cable to provide eight sensor channels total. The Arduino Nano Every drives both boards over the same SDA, SCL, RST, and power lines. The two TCA9546A multiplexers are differentiated by I^2C address:

- **Board 0:** Mux address `0x70` (A0 = GND, factory default)
- **Board 1:** Mux address `0x71` (A0 = VCC, requires hardware modification)

7.2 Hardware Modification for Board 1

On Board 1's TCA9546A (U1), the A0 pin must be changed from GND to VCC:

1. Identify the A0 pad on U1 (pin 1 of TCA9546AD; see Figure 4).
2. Remove or cut the GND connection to A0.
3. Bridge A0 to the VCC net (3.3 V). A short wire or solder bridge to the adjacent VCC pad is sufficient.
4. After the modification, confirm with an ohmmeter that A0 is connected to VCC and isolated from GND.

7.3 FFC Cable Connection

1. Use a Type-B FFC cable (Top-on-One-Side, Bottom-on-the-Other). This type is required because the PIN_OUT connector on one board faces opposite to the PIN_IN connector on the next.
2. Insert one end of the cable into Board 0's PIN_OUT connector (J1). The contacts should face the correct direction for the ZIF/LIF latch on that connector.
3. Insert the other end into Board 1's PIN_IN connector (J4).
4. **Before powering on:** double-check that the +5 V, +3.3 V, GND, SDA, and SCL pins map correctly across the connector. A pin reversal will short power to GND.

7.4 Sensor Numbering Convention

With both boards connected, the eight sensors are addressed as follows:

Table 11: Full 8-Sensor Addressing Map

Logical ID	**Board**	**Mux addr**	**Channel**	**Sensor I^{2}C addr**
Sensor 0	Board 0	`0x70`	0 (`0x01`)	`0x30`
Sensor 1	Board 0	`0x70`	1 (`0x02`)	`0x30`
Sensor 2	Board 0	`0x70`	2 (`0x04`)	`0x30`
Sensor 3	Board 0	`0x70`	3 (`0x08`)	`0x30`
Sensor 4	Board 1	`0x71`	0 (`0x01`)	`0x30`
Sensor 5	Board 1	`0x71`	1 (`0x02`)	`0x30`
Sensor 6	Board 1	`0x71`	2 (`0x04`)	`0x30`
Sensor 7	Board 1	`0x71`	3 (`0x08`)	`0x30`

8 Programming the Board

8.1 Development Environment

- Arduino IDE 2.x (or 1.8.x)
- Board package: *Arduino megaAVR Boards* (install via Boards Manager, search "megaAVR")
- Required libraries: `Wire` (built-in), *[MMC5983MA library — add name and source here]*

8.2 I²C Scanner

Use this sketch to verify hardware before running the full firmware:

```
#include <Wire.h>

void setup() {
  Wire.begin();
  Wire.setClock(400000);  // 400 kHz Fast Mode
  Serial.begin(115200);
  Serial.println("I2C Scanner");
}

void loop() {
  for (uint8_t addr = 1; addr < 127; addr++) {
    Wire.beginTransmission(addr);
    if (Wire.endTransmission() == 0) {
      Serial.print("Found device at 0x");
      Serial.println(addr, HEX);
    }
  }
  Serial.println("-- scan complete --");
  delay(3000);
}
```

Listing 1: I²C scanner sketch

Expected output (two boards):

```
Found device at 0x70   <- Board 0 mux
Found device at 0x71   <- Board 1 mux
```

After confirming both muxes, scan inside each channel:

```
void scanChannel(uint8_t muxAddr, uint8_t channel) {
  // Select channel
  Wire.beginTransmission(muxAddr);
  Wire.write(1 << channel);
```

```
  Wire.endTransmission();

  // Scan
  Wire.beginTransmission(0x30);
  if (Wire.endTransmission() == 0)
    Serial.println("␣␣MMC5983MA␣found␣at␣0x30");
  else
    Serial.println("␣␣No␣sensor!");

  // Deselect
  Wire.beginTransmission(muxAddr);
  Wire.write(0x00);
  Wire.endTransmission();
}
```

Listing 2: Per-channel I^{2}C scan

8.3 Core Firmware Structure

```
#include <Wire.h>
// #include <MMC5983MA.h>  // add your library here

#define MUX0  0x70
#define MUX1  0x71
#define MMC   0x30
#define RST_PIN 4   // Arduino pin connected to RST net

void selectSensor(uint8_t muxAddr, uint8_t channel) {
  Wire.beginTransmission(muxAddr);
  Wire.write(1 << channel);
  Wire.endTransmission();
}

void deselectAll(uint8_t muxAddr) {
  Wire.beginTransmission(muxAddr);
  Wire.write(0x00);
  Wire.endTransmission();
}

void resetMuxes() {
  digitalWrite(RST_PIN, LOW);
  delayMicroseconds(10);
  digitalWrite(RST_PIN, HIGH);
}

void readSensor(uint8_t muxAddr, uint8_t channel,
                float &Bx, float &By, float &Bz) {
  selectSensor(muxAddr, channel);
```

```

  // TODO: issue SET pulse, trigger measurement, read 18-bit registers
  // Convert raw counts to Gauss:
  //   B_G = (raw - 2^17) / (2^18 / 16.0)

  deselectAll(muxAddr);
}

void setup() {
  Wire.begin();
  Wire.setClock(400000);
  Serial.begin(115200);
  pinMode(RST_PIN, OUTPUT);
  digitalWrite(RST_PIN, HIGH);
  resetMuxes();
}

void loop() {
  float Bx, By, Bz;
  // Print header
  Serial.println("sensorID,Bx_G,By_G,Bz_G");

  // Board 0 (mux 0x70), sensors 0-3
  for (uint8_t ch = 0; ch < 4; ch++) {
    readSensor(MUX0, ch, Bx, By, Bz);
    Serial.print(ch); Serial.print(",");
    Serial.print(Bx,4); Serial.print(",");
    Serial.print(By,4); Serial.print(",");
    Serial.println(Bz,4);
  }

  // Board 1 (mux 0x71), sensors 4-7
  for (uint8_t ch = 0; ch < 4; ch++) {
    readSensor(MUX1, ch, Bx, By, Bz);
    Serial.print(ch+4); Serial.print(",");
    Serial.print(Bx,4); Serial.print(",");
    Serial.print(By,4); Serial.print(",");
    Serial.println(Bz,4);
  }

  delay(100);  // 10 Hz acquisition
}
```

Listing 3: Firmware skeleton — main loop

9 Reading and Interpreting Data

9.1 Output Format

The firmware streams CSV over USB-serial at 115200 baud. Each line represents one sensor reading:

```
sensorID,Bx_G,By_G,Bz_G
0,0.2341,0.0123,-0.4412
1,0.2339,0.0120,-0.4410
...
7,0.2344,0.0125,-0.4415
```

Open the Arduino Serial Monitor or connect a Python script (see Section 9.4).

9.2 Unit Conversion

The MMC5983MA outputs 18-bit unsigned integers. The zero-field output code is $2^{17} = 131072$. The full-scale range is $\pm 8\,\mathrm{G}$ across $2^{18} = 262144$ counts, giving a sensitivity of $16\,\mathrm{G}/262144 = 0.0625\,\mathrm{mG/LSB}$. The conversion is:

$$B\,[\mathrm{G}] = \frac{\mathrm{raw} - 2^{17}}{2^{18}/16} = \frac{\mathrm{raw} - 131072}{16384} \tag{1}$$

where raw is the 18-bit output value (combined from the six measurement registers `0x00`–`0x05`, plus two LSBs in `0x06`).

9.3 SET/RESET Procedure

Issue a SET/RESET at the beginning of each acquisition session and periodically during long runs (recommended every 5–10 minutes, or if readings drift unexpectedly):

1. Write `0x08` to `CONTROL_0` (`0x09`) to issue a **SET** pulse. Wait $\geq 1\,\mu$s.
2. Take measurement B_{SET}.
3. Write `0x10` to `CONTROL_0` to issue a **RESET** pulse. Wait $\geq 1\,\mu$s.
4. Take measurement B_{RESET}.
5. Compute $B = (B_{\mathrm{SET}} - B_{\mathrm{RESET}})/2$ to cancel the DC offset.

For continuous monitoring where offset cancellation is less critical, a single SET at startup followed by triggered measurements is acceptable.

9.4 Data Collection Workflow (for Chunya)

1. Connect the Arduino Nano Every to the computer via USB.

2. Open a terminal or run the Python logger script:

```python
import serial, csv, time

port = "COM3"          # Windows: COMx; Linux/Mac: /dev/ttyACM0
baud = 115200

with serial.Serial(port, baud, timeout=1) as ser, \
     open("data.csv", "w", newline="") as f:
    writer = csv.writer(f)
    writer.writerow(["time_s","id","Bx","By","Bz"])
    t0 = time.time()
    while True:
        line = ser.readline().decode().strip()
        if line and not line.startswith("sensor"):
            parts = line.split(",")
            writer.writerow([round(time.time()-t0,3)] + parts)
```

Listing 4: Minimal Python logger

3. Allow the system to warm up for 30 seconds before recording data.
4. Issue a SET/RESET at the start of each run (see above or press the reset button to re-run `setup()`).
5. Stop logging with Ctrl-C; data is saved to `data.csv`.
6. Verify data with `pandas`: confirm all 8 sensor IDs appear and field magnitudes are in the range 0.2–0.6 G (ambient Earth field).

10 Troubleshooting

Table 12: Common Issues and Resolutions

Symptom	Likely Cause	Resolution
I^2C scanner shows nothing	Pull-ups missing; solder joint on mux	Verify 2.7 kΩ on SDA/SCL; reflow U1
Only one mux found (e.g., only `0x70`)	Board 1 A0 not moved to VCC	Rework A0 solder bridge on Board 1 TCA9546A (see Section 7)
Mux found but sensor `0x30` missing on a channel	Bad reflow on that MMC5983MA; wrong channel byte	Re-solder suspect sensor; check channel select logic
All-zeros or maxed-out readings	SET/RESET not issued; sensor not in I^2C mode (SPL_CS floating)	Issue SET before measurement; verify SPL_CS is NC not floating
Noisy / drifting readings	Insufficient SET/RESET; ferromagnetic object nearby	Repeat SET/RESET; remove tools or cables from sensor vicinity
FFC cable connects but no comms	Cable orientation wrong (not Type-B)	Flip cable end-for-end; recheck contact orientation
Upload fails (Nano Every)	Wrong board/Registers Emulation setting	Set Registers Emulation to "None (ATMEGA4809)"; double-tap reset
LM3940 output $\neq$ 3.3 V	C2 wrong polarity; U2 misorientated	Verify C2 (+ to OUT pin); check U2 pin 1 marker

10.1 Using an Oscilloscope to Debug I^2C

Probe SDA on pin 15 and SCL on pin 14 of U1. A healthy transaction at 400 kHz should show:

- SCL: clean square wave, 400 kHz period, logic-high $\approx$ 3.3 V.
- SDA: data transitions only when SCL is low; stable during SCL high.
- ACK: SDA pulled low by the device on the 9th clock pulse.

If SDA does not return high between transactions, suspect a stuck device. Assert the RST pin low for $> 10\,\mu$s to reset the mux and clear any stuck state.

10.2 Bus Recovery Procedure

If the I^2C bus hangs (SDA stuck low):

1. Assert RST_PIN low from the Arduino for 100 µs.
2. Release RST_PIN high.
3. Call `Wire.end()` then `Wire.begin()` in firmware to reinitialize the TWI peripheral.
4. Re-run the I^2C scanner to confirm bus recovery.

11 Known Limitations and Future Work

- **No on-chip temperature compensation:** The MMC5983MA offset drifts with temperature. For precision measurements over long runs, periodically repeat the SET/RESET subtraction procedure.
- **No interrupt-driven acquisition:** The INT pin is unused; the firmware polls the measurement-done bit. A future revision could wire INT to an Arduino input to reduce latency and CPU load.
- **Expansion limited to 8 addresses (0x70–0x77):** A maximum of 8 boards (32 sensors) can share a single I^2C bus using the TCA9546A address range. Beyond this, a second hardware I^2C bus or a different mux topology is required.
- **FFC cable length sensitivity:** Long FFC cables increase bus capacitance. If communication errors occur with cables >30 cm, reduce `Wire.setClock()` to 100 kHz.
- **SPI mode not implemented:** The MMC5983MA supports SPI for faster data rates (>1 MHz). If the 400 kHz I^2C throughput proves insufficient for future experiments, a board redesign using SPI would allow much higher sample rates.

Acknowledgments

Thank you to Dr. Elliott for guidance throughout this project, and to Chunya Wang for testing the two-board configuration and identifying the I^2C address conflict (and its solution) during system bring-up.

References

[1] MEMSIC, *MMC5983MA 3-Axis Magnetic Sensor with I²C/SPI Interface Datasheet*, Rev. A.

[2] Texas Instruments, *TCA9546A Low-Voltage 4-Channel I²C Switch with Reset Datasheet*, SCPS204.

[3] Texas Instruments, *LM3940 1-A Low-Dropout Regulator for 5-V to 3.3-V Conversion Datasheet*, SNOS386.

[4] Arduino, *Arduino Nano Every Datasheet and Pinout Reference*, https://docs.arduino.cc/hardware/nano-every.

[5] KiCad EDA, https://www.kicad.org.

A I²C Address Map

Table 13: Complete I²C Address Map (two-board system)

Device	Address	Board	Notes
TCA9546A (U1)	0x70	Board 0	A0=GND
TCA9546A (U1)	0x71	Board 1	A0=VCC
MMC5983MA (U3–U6)	0x30	Both	Isolated per mux channel
Arduino Nano Every	—	—	Master only, no slave addr

B Register Quick Reference

Table 14: MMC5983MA Key Registers

Reg (hex)	Name	R/W	Description
0x00	Xout0	R	X-axis output [17:10]
0x01	Xout1	R	X-axis output [9:2]
0x02	Yout0	R	Y-axis output [17:10]
0x03	Yout1	R	Y-axis output [9:2]
0x04	Zout0	R	Z-axis output [17:10]
0x05	Zout1	R	Z-axis output [9:2]
0x06	XYZout2	R	Bits [1:0] of X, Y, Z (18-bit)
0x08	Status	R	Bit 0: Meas_M_Done
0x09	Control_0	W	Bit 0: TM_M (trigger); Bit 3: SET; Bit 4: RESET
0x0A	Control_1	W	BW[1:0]: bandwidth / ODR select
0x2F	Product ID	R	Should read `0x30`

C Gerber File Manifest

All Gerber files were generated from KiCad 10.0.1 on 2026-04-27. The job file is `MAG_PCB_FINAL-job.gbrjob`

Table 15: Gerber File Manifest

Filename	Layer	Function
`MAG PCB FINAL-F_Cu.gbr`	F_Cu (L1)	Top copper, all signal routing
`MAG PCB FINAL-B_Cu.gbr`	B_Cu (L2)	Bottom copper, ground/return paths
`MAG PCB FINAL-F_Paste.gbr`	F_Paste	Top solder paste (stencil)
`MAG PCB FINAL-B_Paste.gbr`	B_Paste	Bottom solder paste
`MAG PCB FINAL-F_Silkscreen.gbr`	F_Silkscreen	Top component labels and outline
`MAG PCB FINAL-B_Silkscreen.gbr`	B_Silkscreen	Bottom labels
`MAG PCB FINAL-F_Mask.gbr`	F_Mask	Top solder mask (openings)
`MAG PCB FINAL-B_Mask.gbr`	B_Mask	Bottom solder mask
`MAG PCB FINAL-Edge_Cuts.gbr`	Edge_Cuts	Board outline / routed profile
`MAG PCB FINAL-job.gbrjob`	—	Gerber job file (fab instructions)

Submit all ten files to the PCB fabricator. The job file encodes the board size (50.05 mm × 120.05 mm), layer count (2), thickness (1.6 mm), and design rules automatically.