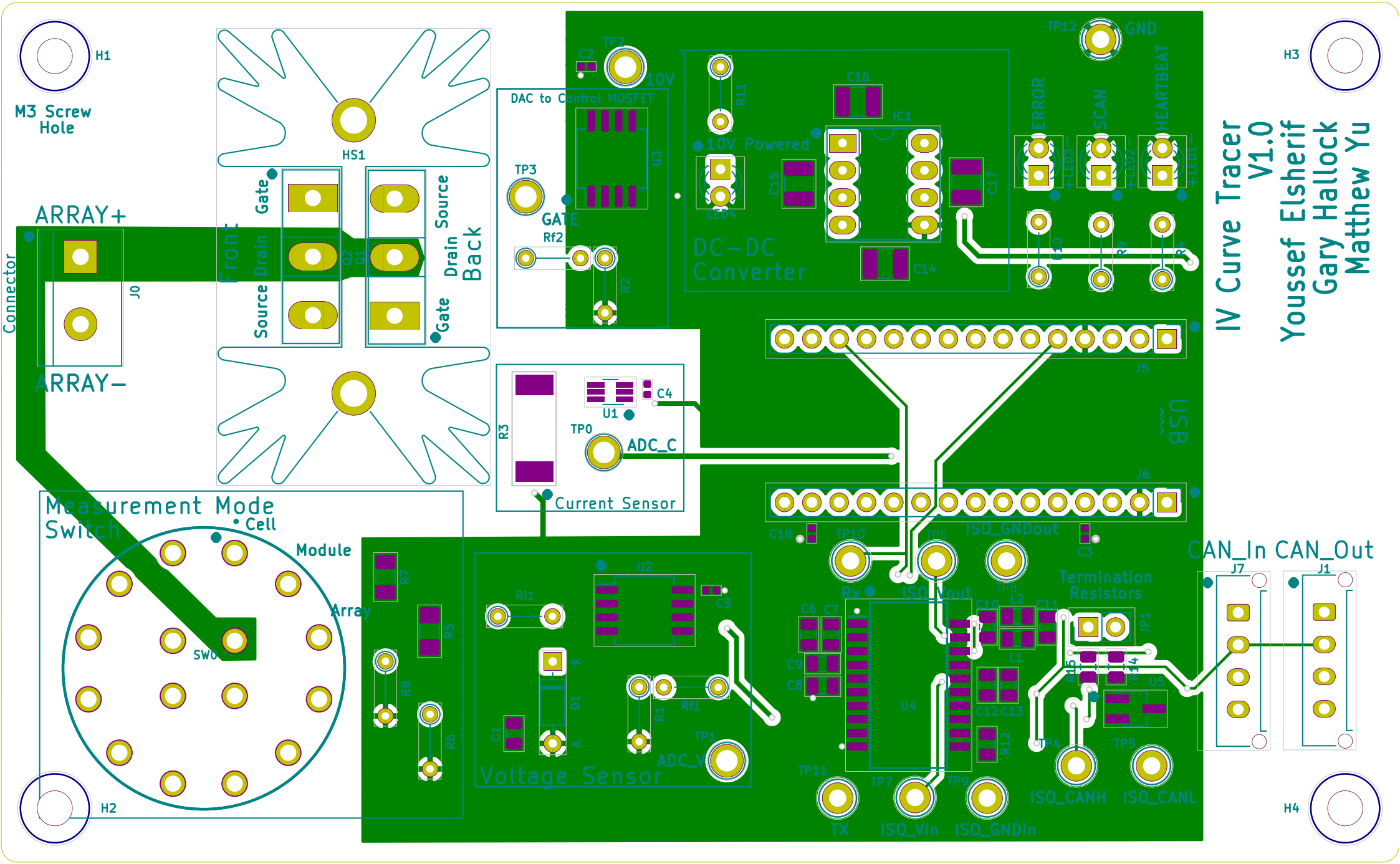
IV Curve Tracer
V1.0
Youssef Elsherif
Gary Hallock
Matthew Yu
M3 Screw Hole
H1
H2
H3
H4
HS1
ARRAY+
ARRAY−
Connector
J0
Front
Back
Gate
Source
Drain
Q1
Q2
DAC to Control MOSFET
U3
TP2
TP3
GATE
Rf2
R2
C2
10V
10V Powered
LED4
R11
C15
C16
C17
C14
IC1
DC-DC Converter
TP12
GND
ERROR
SCAN
HEARTBEAT
LED3
LED2
LED1
R10
R9
R8
J5
J6
USB
C4
U1
TP0
ADC_C
R3
Current Sensor
Measurement Mode Switch
Cell
Module
Array
SW0
R7
R5
R8
R6
Voltage Sensor
U2
Rf1
R1
C5
C1
D1
K
A
TP1
ADC_V
C18
TP10
TP6
ISO_GNDout
C3
Rx
ISO_Vout
TP8
C6
C7
C9
C8
U4
C10
L2
C11
L1
C12
C13
R12
Termination Resistors
JP1
R15
R14
U5
TP4
TP5
ISO_CANH
ISO_CANL
TP11
TP7
TP9
TX
ISO_Vin
ISO_GNDin
CAN_In
CAN_Out
J7
J1