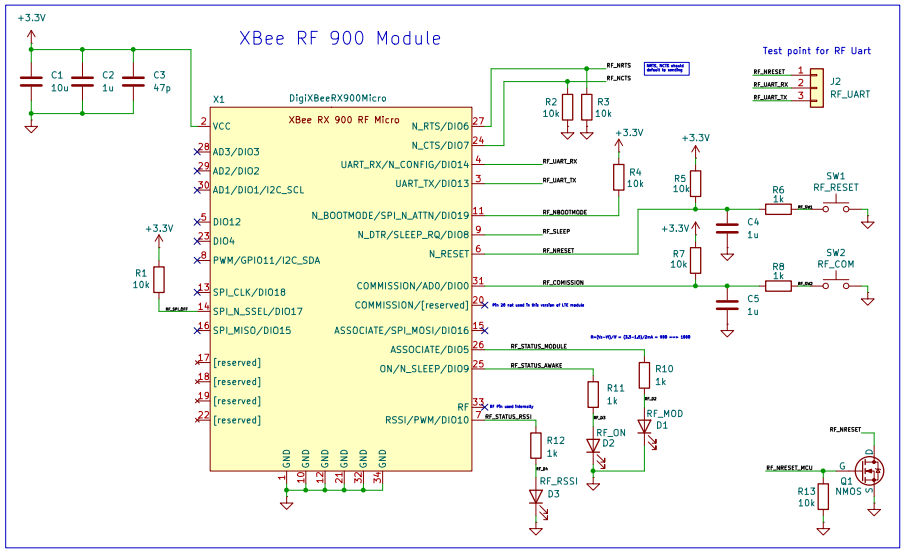
XBee RF 900 Module
X1
DigiXBeeRX900Micro
XBee RX 900 RF Micro
VCC
AD3/DIO3
AD2/DIO2
AD1/DIO1/I2C_SCL
DIO12
DIO4
PWM/GPIO11/I2C_SDA
SPI_CLK/DIO18
SPI_N_SSEL/DIO17
SPI_MISO/DIO15
[reserved]
N_RTS/DIO6
N_CTS/DIO7
UART_RX/N_CONFIG/DIO14
UART_TX/DIO13
N_BOOTMODE/SPI_N_ATTN/DIO19
N_DTR/SLEEP_RQ/DIO8
N_RESET
COMMISSION/AD0/DIO0
COMMISSION/[reserved]
ASSOCIATE/SPI_MOSI/DIO16
ASSOCIATE/DIO5
ON/N_SLEEP/DIO9
RF
RSSI/PWM/DIO10
GND
Test point for RF Uart
J2
RF_UART
SW1
RF_RESET
SW2
RF_COM
RF_MOD
D1
RF_ON
D2
RF_RSSI
D3
Q1
NMOS
+3.3V
+12V

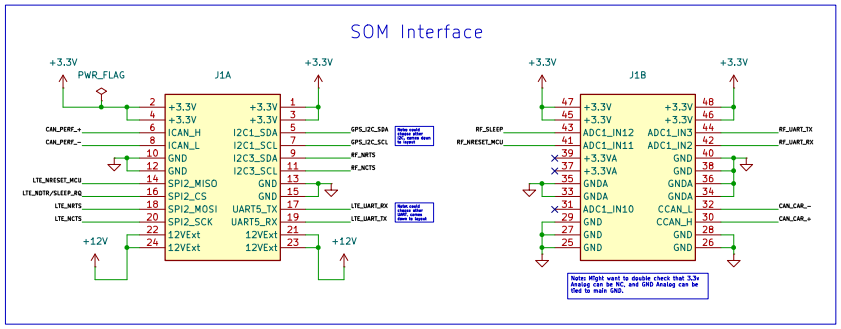
SOM Interface
J1A
J1B
PWR_FLAG
+3.3V
+12V
ICAN_H
ICAN_L
GND
SPI2_MISO
SPI2_CS
SPI2_MOSI
SPI2_SCK
12VExt
I2C1_SDA
I2C1_SCL
I2C3_SDA
I2C3_SCL
UART5_TX
UART5_RX
ADC1_IN12
ADC1_IN11
ADC1_IN10
ADC1_IN3
ADC1_IN2
CCAN_L
CCAN_H

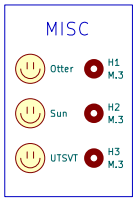
MISC
Otter
Sun
UTSVT
H1
M.3
H2
M.3
H3
M.3

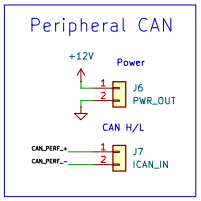
Peripheral CAN
+12V
Power
J6
PWR_OUT
CAN H/L
J7
ICAN_IN

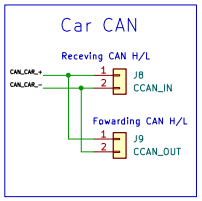
Car CAN
Receving CAN H/L
J8
CCAN_IN
Fowarding CAN H/L
J9
CCAN_OUT

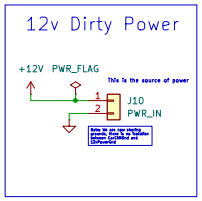
12v Dirty Power
+12V
PWR_FLAG
J10
PWR_IN

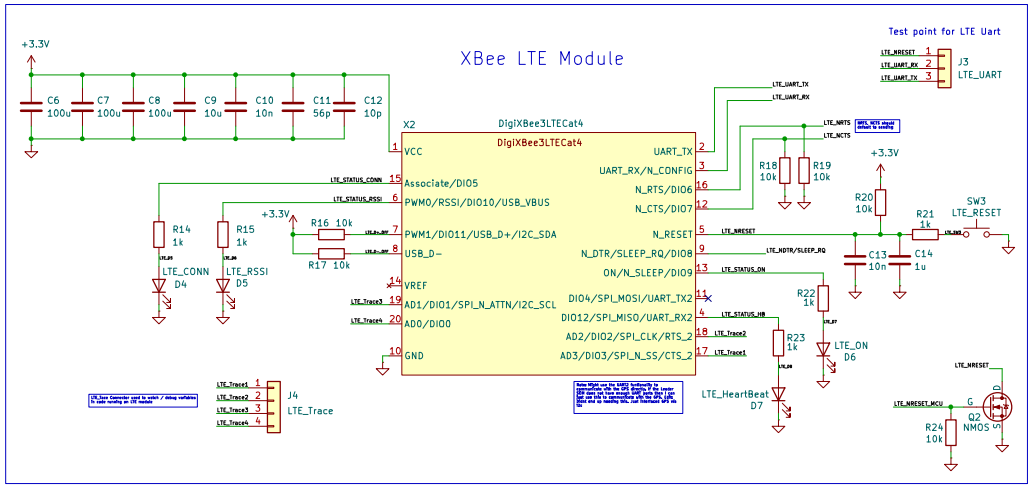
XBee LTE Module
X2
DigiXBee3LTECat4
VCC
Associate/DIO5
PWM0/RSSI/DIO10/USB_VBUS
PWM1/DIO11/USB_D+/I2C_SDA
USB_D−
VREF
AD1/DIO1/SPI_N_ATTN/I2C_SCL
AD0/DIO0
GND
UART_TX
UART_RX/N_CONFIG
N_RTS/DIO6
N_CTS/DIO7
N_RESET
N_DTR/SLEEP_RQ/DIO8
ON/N_SLEEP/DIO9
DIO4/SPI_MOSI/UART_TX2
DIO12/SPI_MISO/UART_RX2
AD2/DIO2/SPI_CLK/RTS_2
AD3/DIO3/SPI_N_SS/CTS_2
Test point for LTE Uart
J3
LTE_UART
SW3
LTE_RESET
LTE_CONN
D4
LTE_RSSI
D5
LTE_ON
D6
LTE_HeartBeat
D7
J4
LTE_Trace
Q2
NMOS
+3.3V

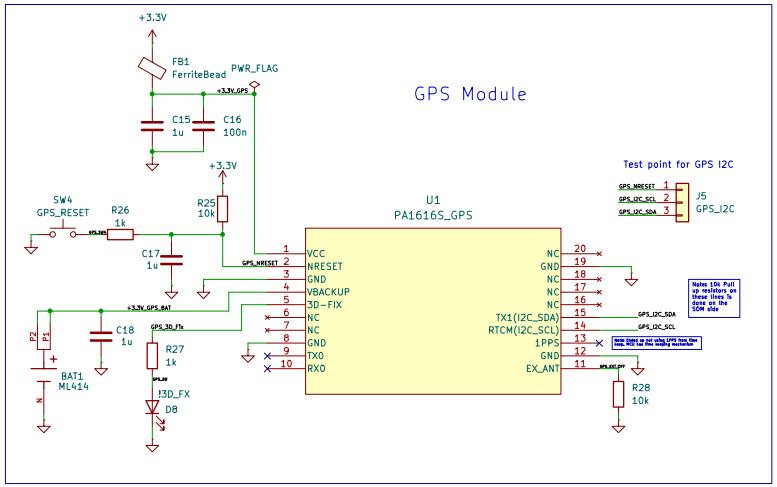
GPS Module
U1
PA1616S_GPS
FB1
FerriteBead
PWR_FLAG
+3.3V
SW4
GPS_RESET
VCC
NRESET
GND
VBACKUP
3D−FIX
NC
TX0
RX0
TX1(I2C_SDA)
RTCM(I2C_SCL)
1PPS
EX_ANT
Test point for GPS I2C
J5
GPS_I2C
BAT1
ML414
D8
+12V