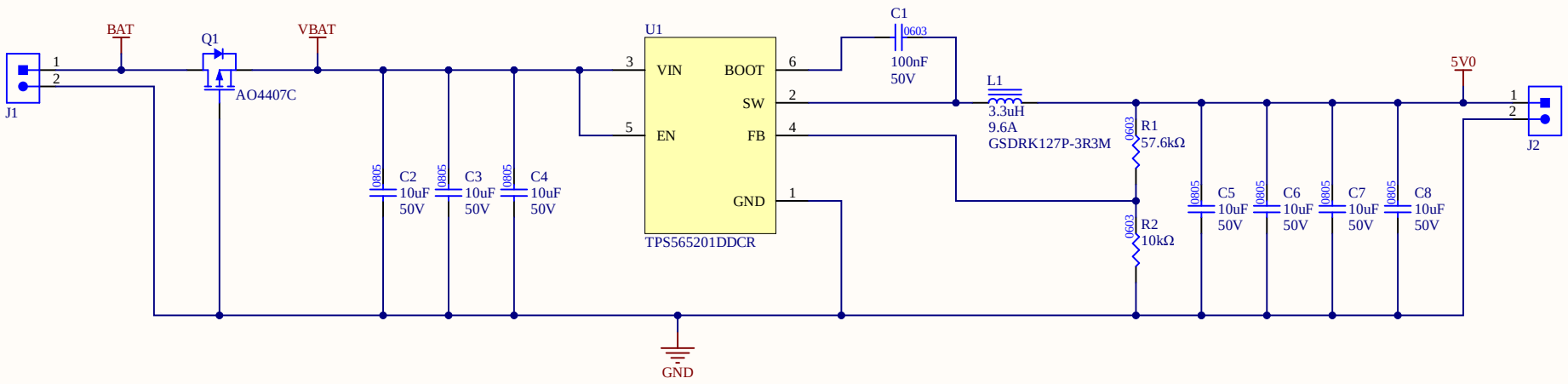

Title		
Size A4	Number	Revision
Date: 7-12-2021		Sheet of
File: C:\Users\..\PDB.SchDoc		Drawn By:

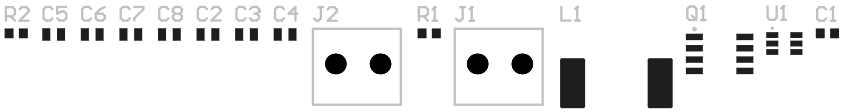
R2
C5
C6
C7
C8
C2
C3
C4
J2
R1
J1
L1
Q1
U1
C1