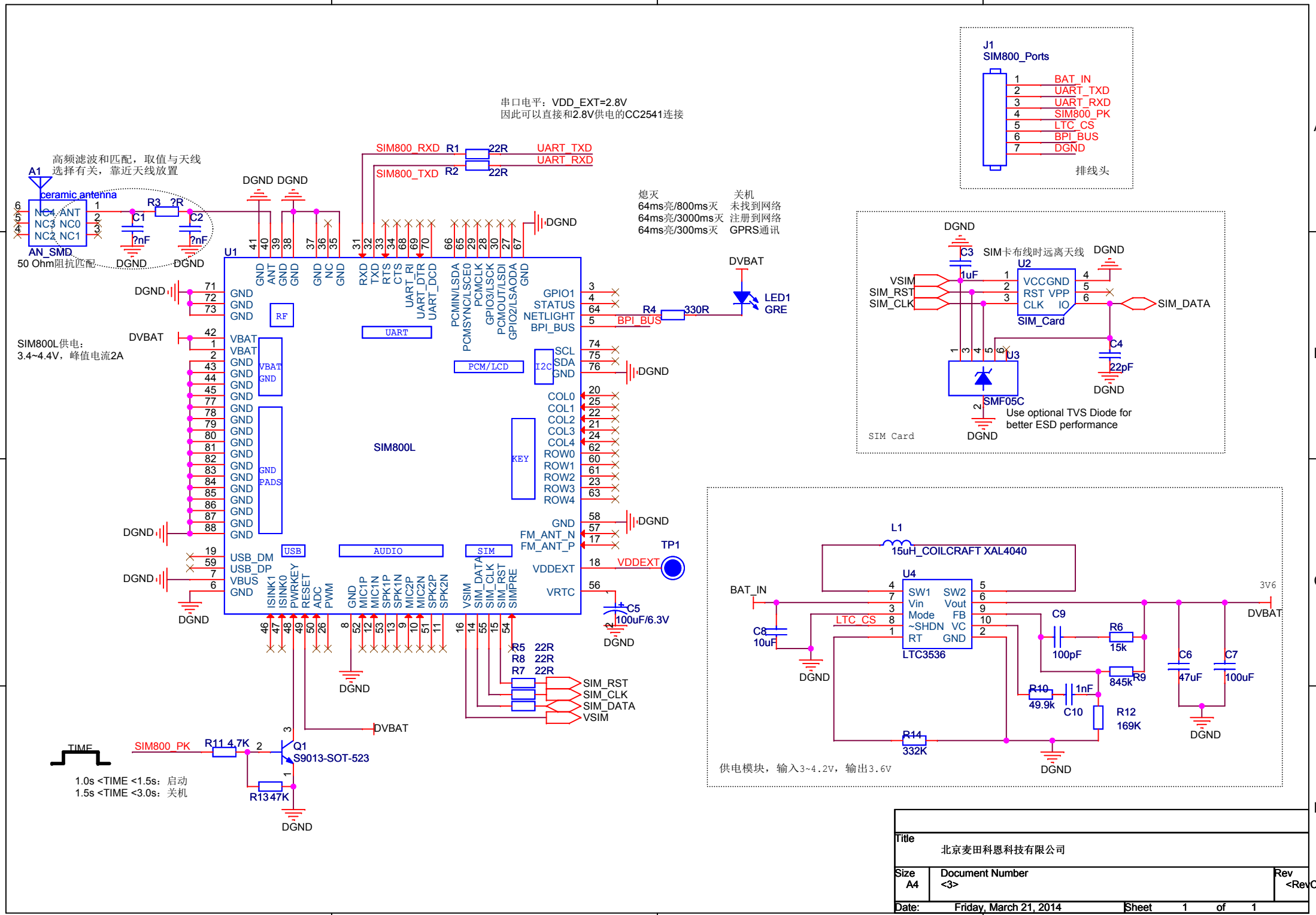
串口电平：VDD_EXT=2.8V
因此可以直接和2.8V供电的CC2541连接
高频滤波和匹配，取值与天线
选择有关，靠近天线放置
A1
ceramic antenna
NC4 ANT
NC3 NC0
NC2 NC1
AN_SMD
50 Ohm阻抗匹配
R3 ?R
C1 ?nF
C2 ?nF
DGND
SIM800_RXD R1 22R UART_TXD
SIM800_TXD R2 22R UART_RXD
熄灭 关机
64ms亮/800ms灭 未找到网络
64ms亮/3000ms灭 注册到网络
64ms亮/300ms灭 GPRS通讯
DVBAT
LED1
GRE
R4 330R
BPI_BUS
SIM800L供电：
3.4~4.4V，峰值电流2A
U1
SIM800L
GND ANT GND GND GND NC GND
RXD TXD RTS CTS UART_RI UART_DTR UART_DCD
PCMIN/LSDA PCMSYNC/LSCE0 PCMCLK GPIO3/LSCK PCMOUT/LSDI GPIO2/LSAODA GND
GPIO1 STATUS NETLIGHT BPI_BUS
RF
UART
PCM/LCD
I2C
SCL SDA GND
VBAT VBAT GND GND GND