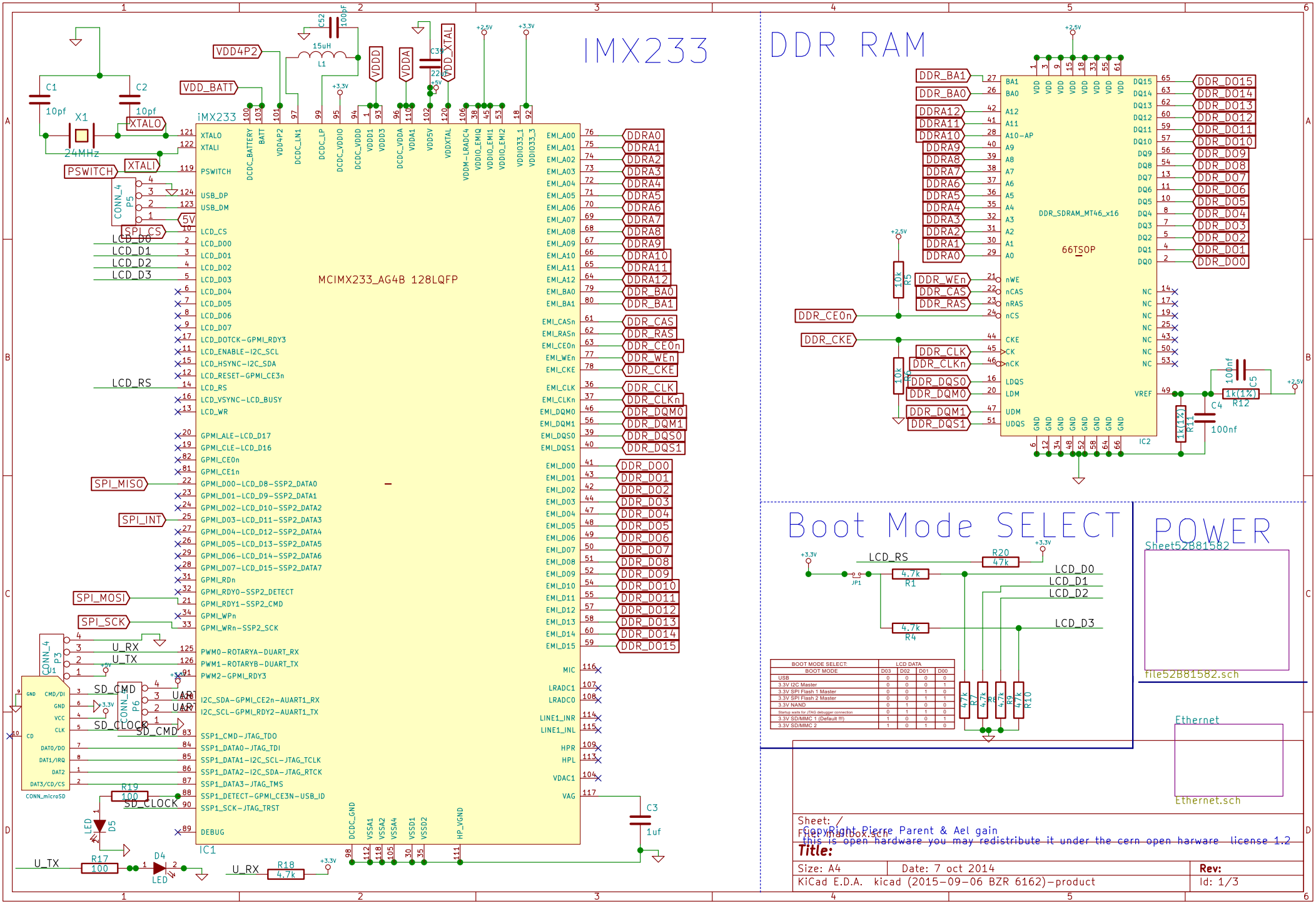
IMX233
MCIMX233_AG4B 128LQFP
iMX233
IC1
DDR RAM
DDR_SDRAM_MT46_x16
66TSOP
IC2
Boot Mode SELECT
POWER
Sheet52B81582
file52B81582.sch
Ethernet
Ethernet.sch
CONN_microSD
CONN_4
24MHz
X1
C1
C2
10pf
XTALO
XTALI
PSWITCH
VDD4P2
VDD_BATT
VDDD
VDDA
VDD_XTAL
15uH
L1
C52
100pF
C3
22uf
C4
100nf
C5
1uf
R12
1k(1%)
R11
R5
10k
R6
R17
100
R18
4.7k
R19
D4
D5
LED
U_TX
U_RX
SD_CMD
SD_CLOCK
SPI_CS
SPI_MISO
SPI_INT
SPI_MOSI
SPI_SCK
LCD_D0
LCD_D1
LCD_D2
LCD_D3
LCD_RS
DDR_CE0n
DDR_CKE
DDR_CAS
DDR_RAS
DDR_WEn
DDR_CLK
DDR_CLKn
DDR_DQM0
DDR_DQM1
DDR_DQS0
DDR_DQS1
DDR_BA0
DDR_BA1
DDRA0
DDRA1
DDRA2
DDRA3
DDRA4
DDRA5
DDRA6
DDRA7
DDRA8
DDRA9
DDRA10
DDRA11
DDRA12
DDR_DO0
DDR_DO1
DDR_DO2
DDR_DO3
DDR_DO4
DDR_DO5
DDR_DO6
DDR_DO7
DDR_DO8
DDR_DO9
DDR_DO10
DDR_DO11
DDR_DO12
DDR_DO13
DDR_DO14
DDR_DO15
R20
47k
R1
4.7k
R4
4.7k
R7
R8
R9
R10
JP1
BOOT MODE SELECT:
LCD DATA
BOOT MODE
D03 D02 D01 D00
USB 0 0 0 0
3.3V I2C Master 0 0 0 1
3.3V SPI Flash 1 Master 0 0 1 0
3.3V SPI Flash 2 Master 0 0 1 1
3.3V NAND 0 1 0 0
Startup waits for JTAG debugger connection 0 1 1 0
3.3V SD/MMC 1 (Default !!!) 1 0 0 1
3.3V SD/MMC 2 1 0 1 0
Sheet: /
Copyright Pierre Parent & Ael gain
this is open hardware you may redistribute it under the cern open harware license 1.2
Title:
Size: A4
Date: 7 oct 2014
Rev:
KiCad E.D.A. kicad (2015-09-06 BZR 6162)-product
Id: 1/3

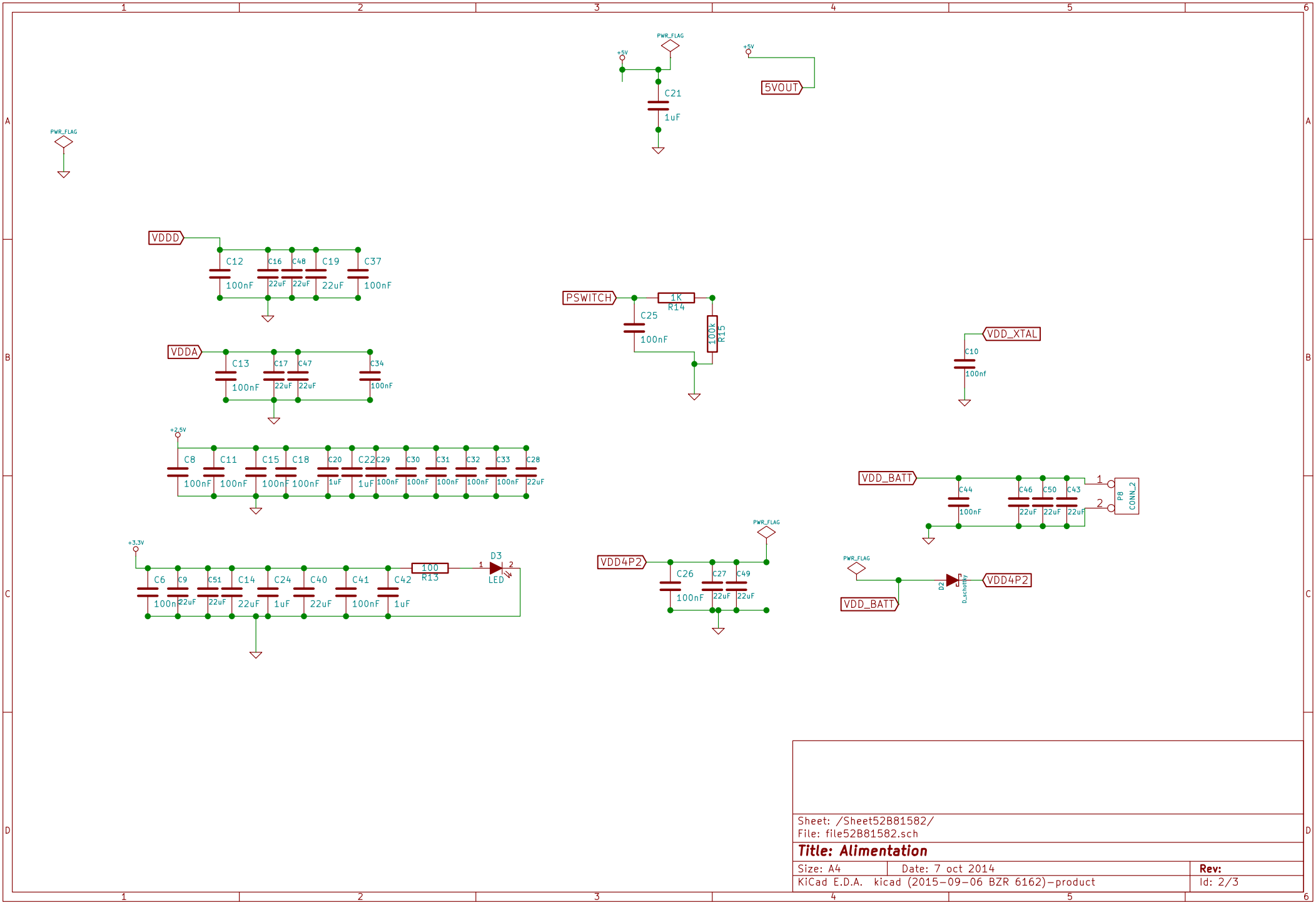

Sheet: /Sheet52B81582/
File: file52B81582.sch

Title: Alimentation

Size: A4	Date: 7 oct 2014	Rev:
KiCad E.D.A. kicad (2015-09-06 BZR 6162)-product		Id: 2/3

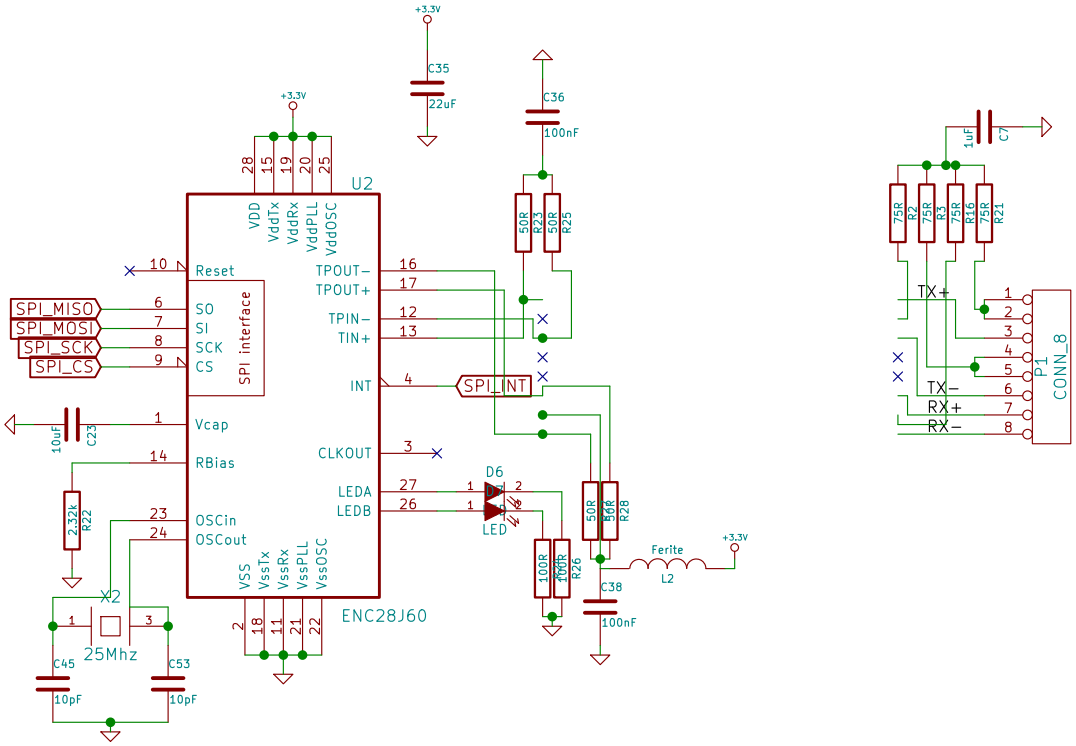

Sheet: /Ethernet/
File: Ethernet.sch

Title:

Size: A4	Date:	Rev:
KiCad E.D.A. kicad (2015-09-06 BZR 6162)-product		Id: 3/3