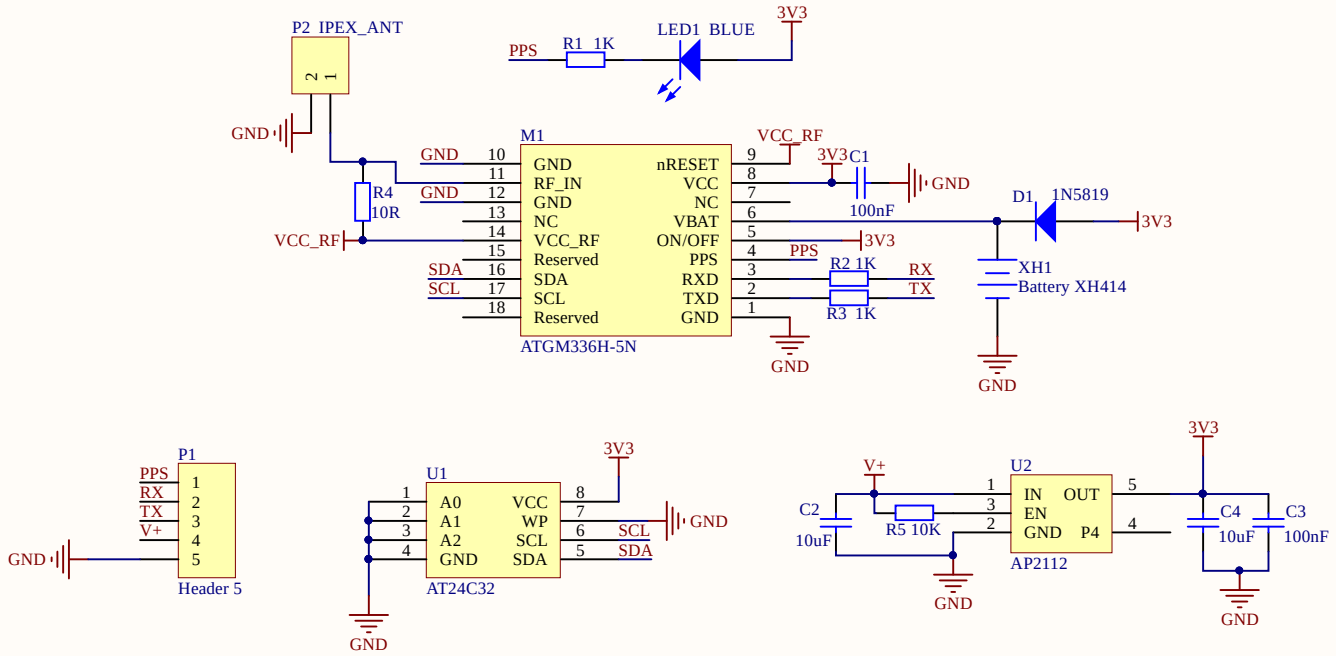

Title	pyIOT-GPS ATGM336H	
Size A4	Number www.01Studio.org	Revision v1.0
Date: 2021-02-06		Sheet of
File: D:\微云同步\..\ATGM336H.SchDoc		Drawn By:

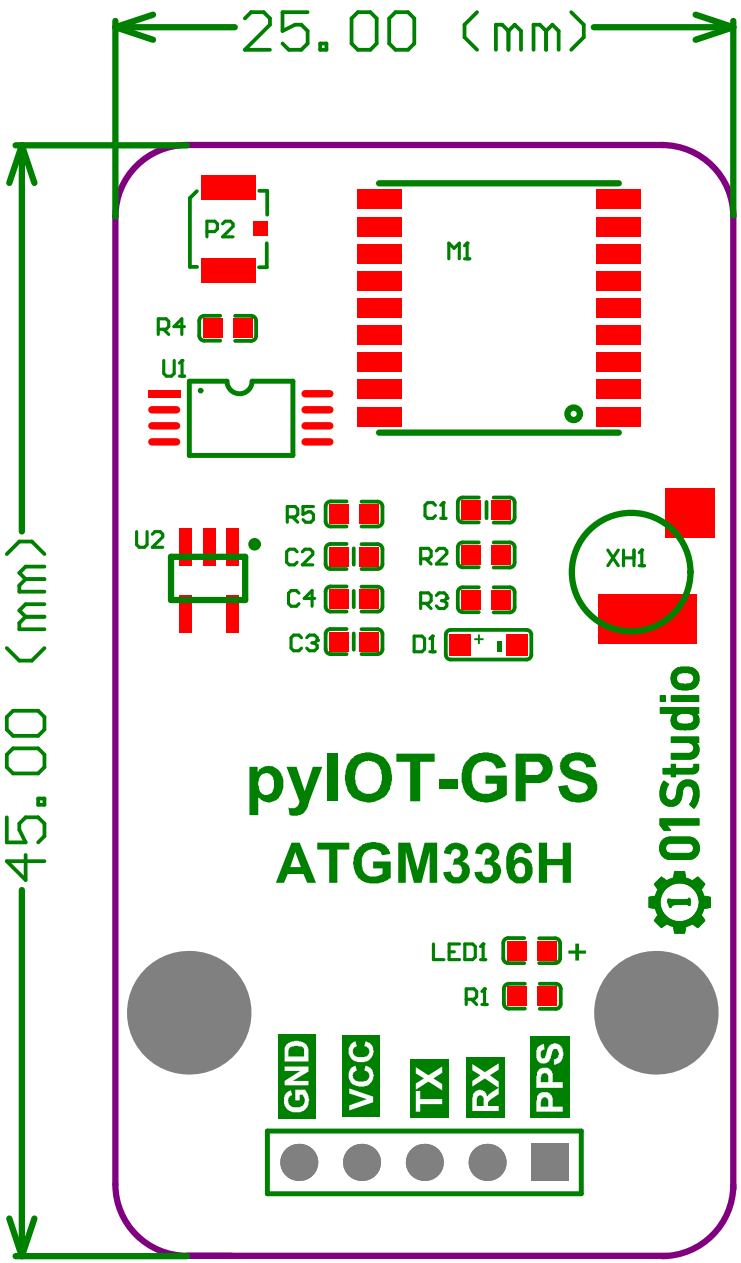
25.00 (mm)
45.00 (mm)
P2
M1
R4
U1
U2
R5
C1
C2
R2
C4
R3
C3
D1
XH1
pyIOT-GPS
ATGM336H
01Studio
LED1
R1
GND
VCC
TX
RX
PPS