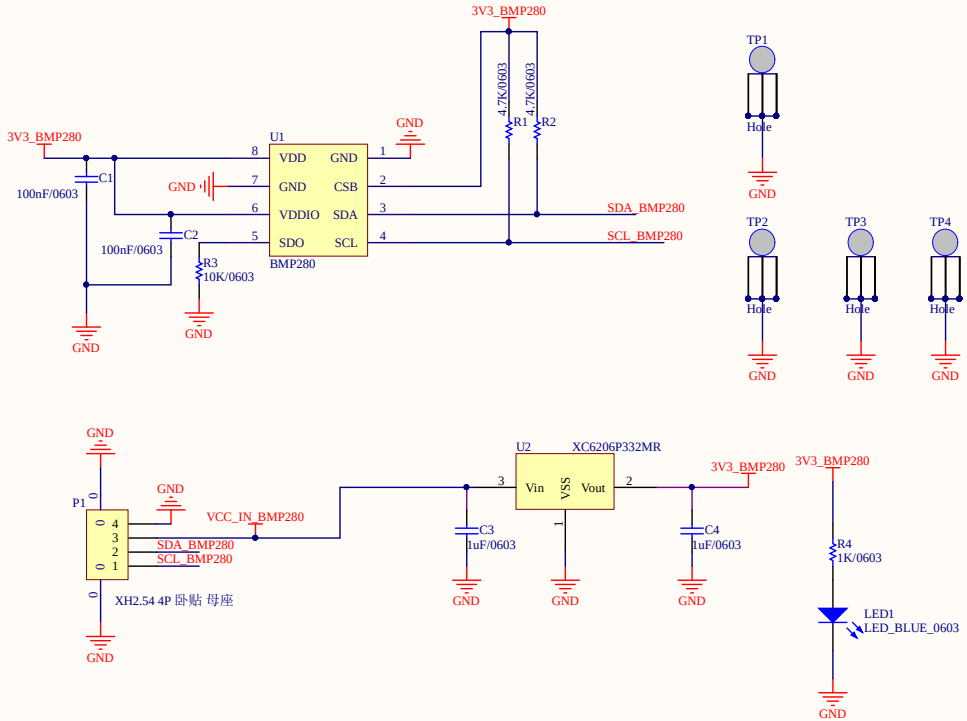

BMP280

Title	Atmospheric Pressure Sensor	
Size A3	Number www.01Studio.org	Revision v1.0
Date: 2021-02-06	Sheet of	
File: C:\Users\..\BMP280传感器V1.SchDoc	Drawn By:	

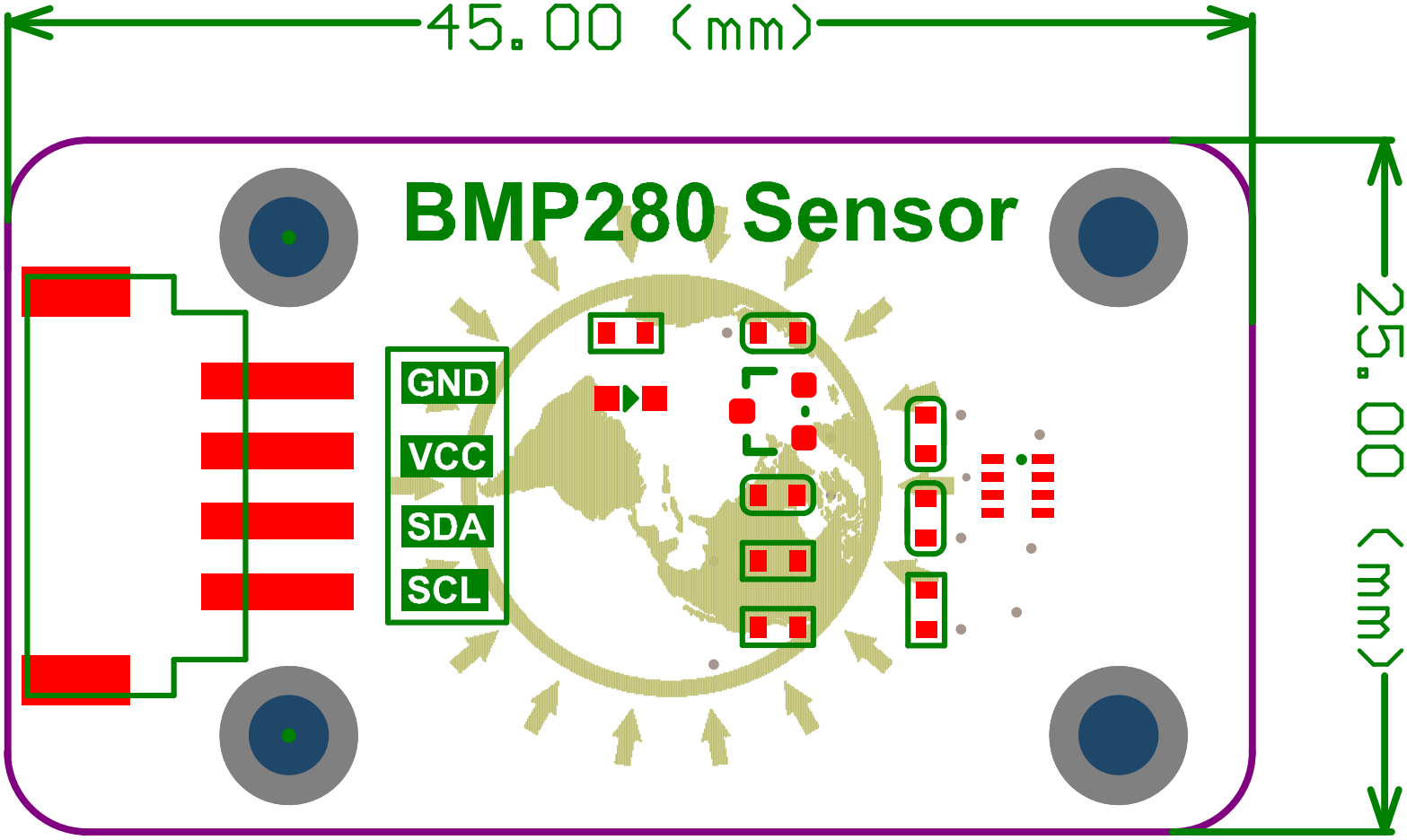
45.00 (mm)
25.00 (mm)
BMP280 Sensor
GND
VCC
SDA
SCL