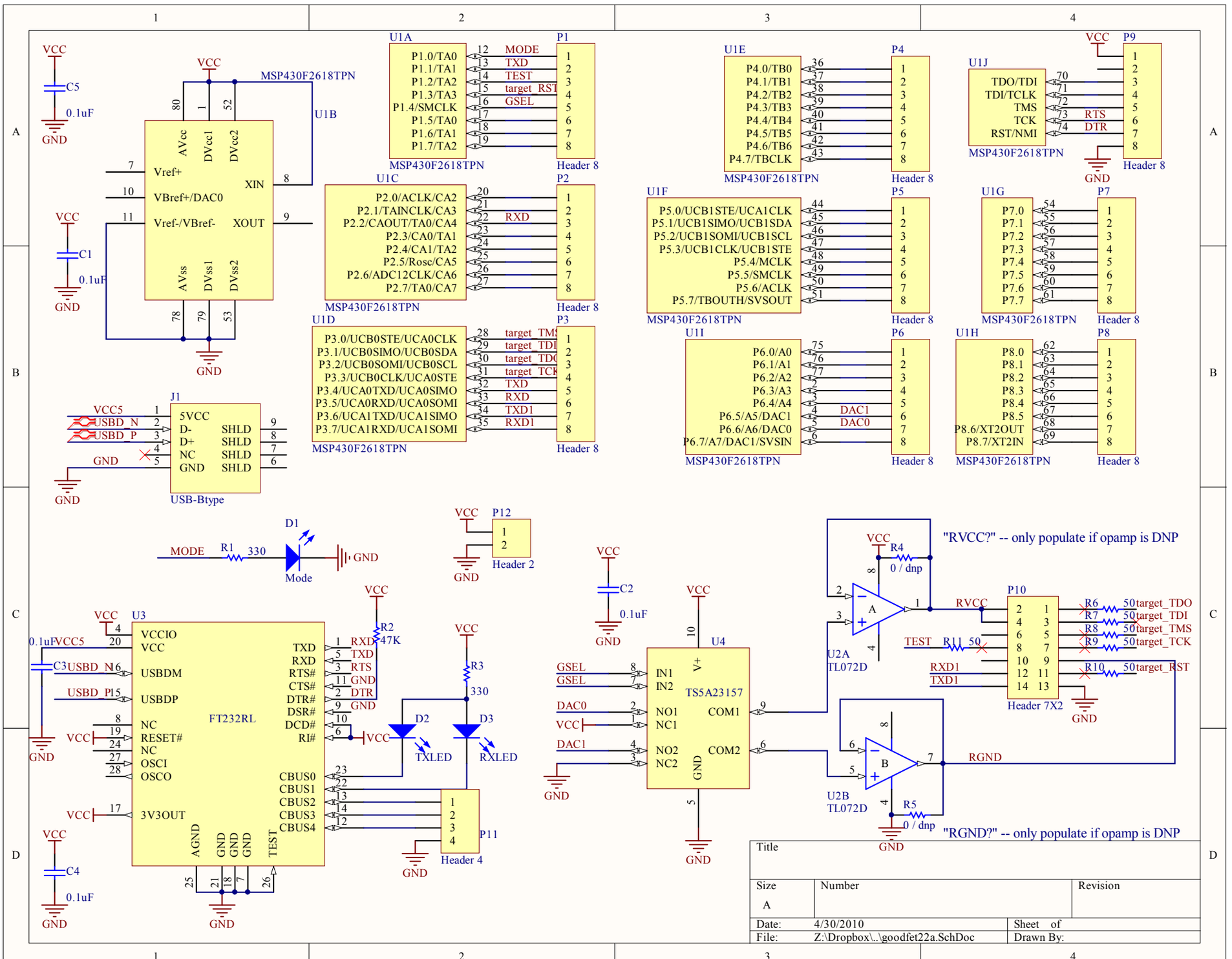
MSP430F2618TPN
U1B
U1A
U1C
U1D
U1E
U1F
U1G
U1H
U1I
U1J
P1
P2
P3
P4
P5
P6
P7
P8
P9
Header 8
J1
USB-Btype
D1
Mode
R1 330
P12
Header 2
U3
FT232RL
R2 47K
R3 330
D2
D3
TXLED
RXLED
P11
Header 4
U4
TS5A23157
U2A
U2B
TL072D
R4 0 / dnp
R5 0 / dnp
P10
Header 7X2
"RVCC?" -- only populate if opamp is DNP
"RGND?" -- only populate if opamp is DNP
Title
Size A
Number
Revision
Date: 4/30/2010
Sheet of
File: Z:\Dropbox\..\goodfet22a.SchDoc
Drawn By:

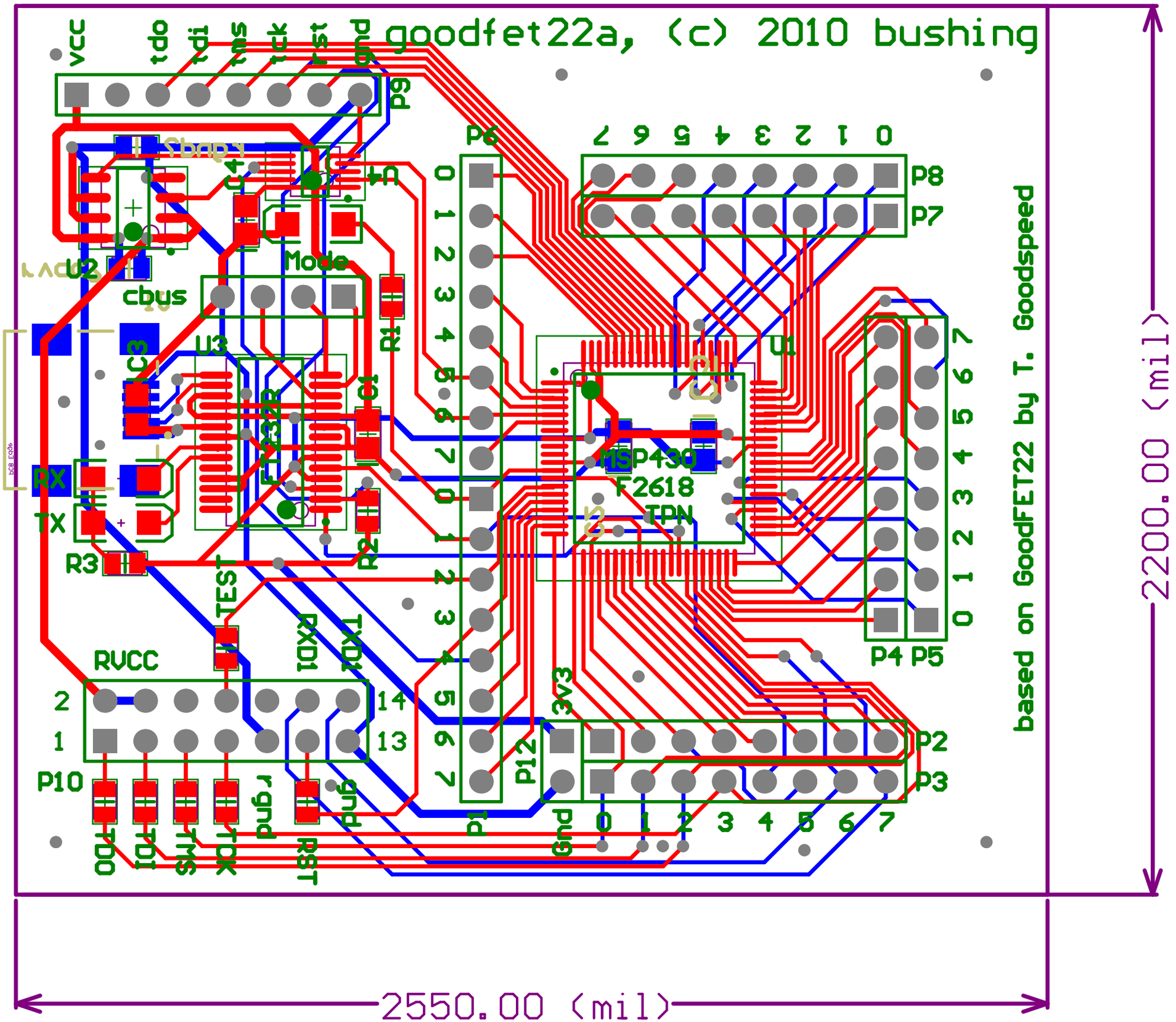
goodfet22a, (c) 2010 bushing
based on GoodFET22 by T. Goodspeed
vcc
tdo
tdi
tms
tck
rst
gnd
P9
P6
P8
P7
P4
P5
P2
P3
P1
P12
P10
U1
U2
U3
U4
C1
C3
C4
R1
R2
R3
Mode
cbus
RX
TX
TEST
RXD1
TXD1
RVCC
3V3
MSP430
F2618
TPN
FT232R
2200.00 (mil)
2550.00 (mil)