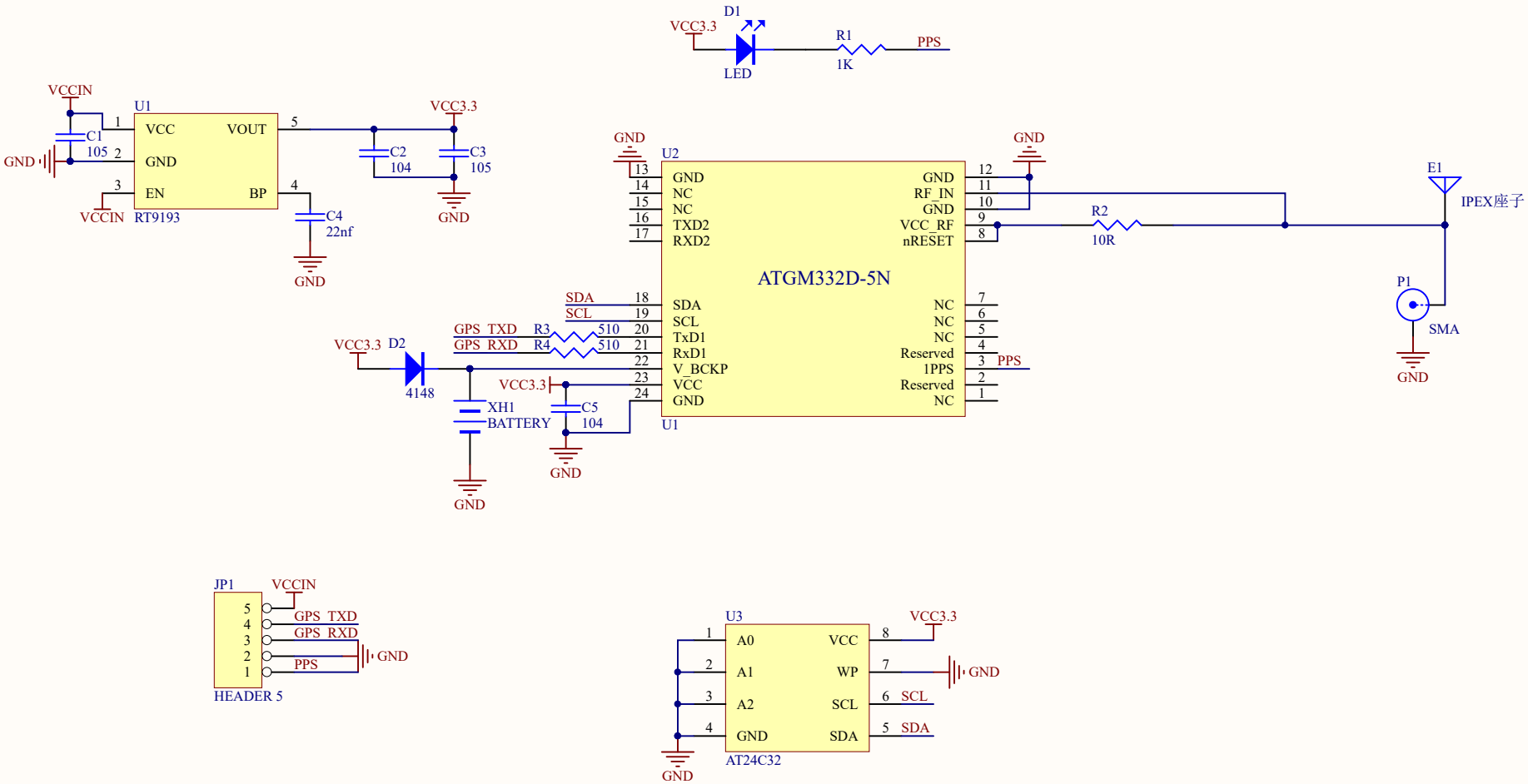

Title		
Size A4	Number	Revision
Date: 2016/12/15	Sheet of	
File: F:\项目文档\..\ATGM332D-5N-GPS.SchDoc	Drawn By:	