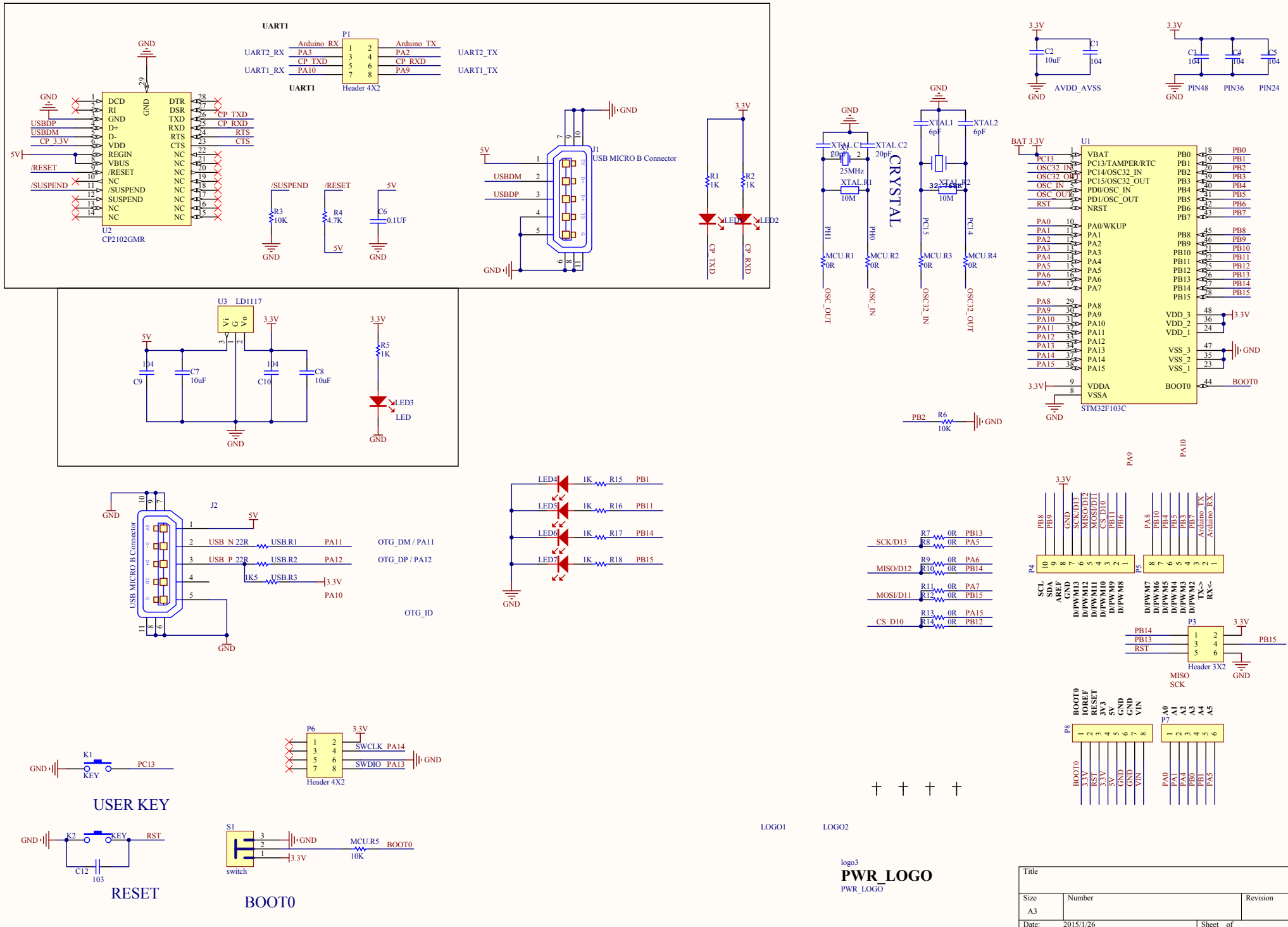
UART1
P1
Arduino_RX
Arduino_TX
UART2_RX
PA3
CP_TXD
PA2
CP_RXD
UART2_TX
UART1_RX
PA10
PA9
UART1_TX
Header 4X2
GND
5V
/RESET
/SUSPEND
CP_3.3V
USBDP
USBDM
DCD
RI
GND
D+
D-
VDD
REGIN
VBUS
/RESET
NC
/SUSPEND
SUSPEND
DTR
DSR
TXD
RXD
RTS
CTS
U2
CP2102GMR
R3
10K
R4
4.7K
C6
0.1UF
J1
USB MICRO B Connector
R1
1K
R2
1K
LED1
LED2
U3 LD1117
Vi
G
Vo
3.3V
C9
104
C7
10uF
C10
104
C8
10uF
R5
1K
LED3
LED
J2
USB MICRO B Connector
USB_N 22R
USB_P 22R
1K5
USB.R1
USB.R2
USB.R3
PA11
PA12
OTG_DM / PA11
OTG_DP / PA12
OTG_ID
LED4
LED5
LED6
LED7
R15
R16
R17
R18
PB1
PB11
PB14
PB15
XTAL_C1
XTAL_C2
20pF
25MHz
XTAL_R1
10M
MCU.R1
MCU.R2
0R
PH1
PH0
OSC_OUT
OSC_IN
CRYSTAL
XTAL1
XTAL2
6pF
32.768K
XTAL_R2
MCU.R3
MCU.R4
PC15
PC14
OSC32_IN
OSC32_OUT
C2
10uF
C1
104
AVDD_AVSS
C3
C4
C5
PIN48
PIN36
PIN24
U1
STM32F103C
VBAT
PC13/TAMPER/RTC
PC14/OSC32_IN
PC15/OSC32_OUT
PD0/OSC_IN
PD1/OSC_OUT
NRST
PA0/WKUP
VDD_3
VDD_2
VDD_1
VSS_3
VSS_2
VSS_1
VDDA
VSSA
BOOT0
PB2
R6
10K
SCK/D13
MISO/D12
MOSI/D11
CS_D10
R7
R8
R9
R10
R11
R12
R13
R14
PB13
PA5
PA6
PB14
PA7
PB15
PA15
PB12
P4
P5
SCL
SDA
AREF
D/PWM13
D/PWM12
D/PWM11
D/PWM10
D/PWM9
D/PWM8
D/PWM7
D/PWM6
D/PWM5
D/PWM4
D/PWM3
D/PWM2
TX->
RX<
P3
Header 3X2
MISO
SCK
P8
P7
BOOT0
IOREF
RESET
3V3
5V
GND
VIN
A0
A1
A2
A3
A4
A5
K1
KEY
USER KEY
P6
SWCLK_PA14
SWDIO_PA13
K2
C12
103
RESET
S1
switch
MCU.R5
10K
BOOT0
LOGO1
LOGO2
logo3
PWR_LOGO
PWR_LOGO
Title
Size
A3
Number
Revision
Date:
2015/1/26
Sheet of
File:
F:\...\IOT STuino-...SchDoc
Drawn By:

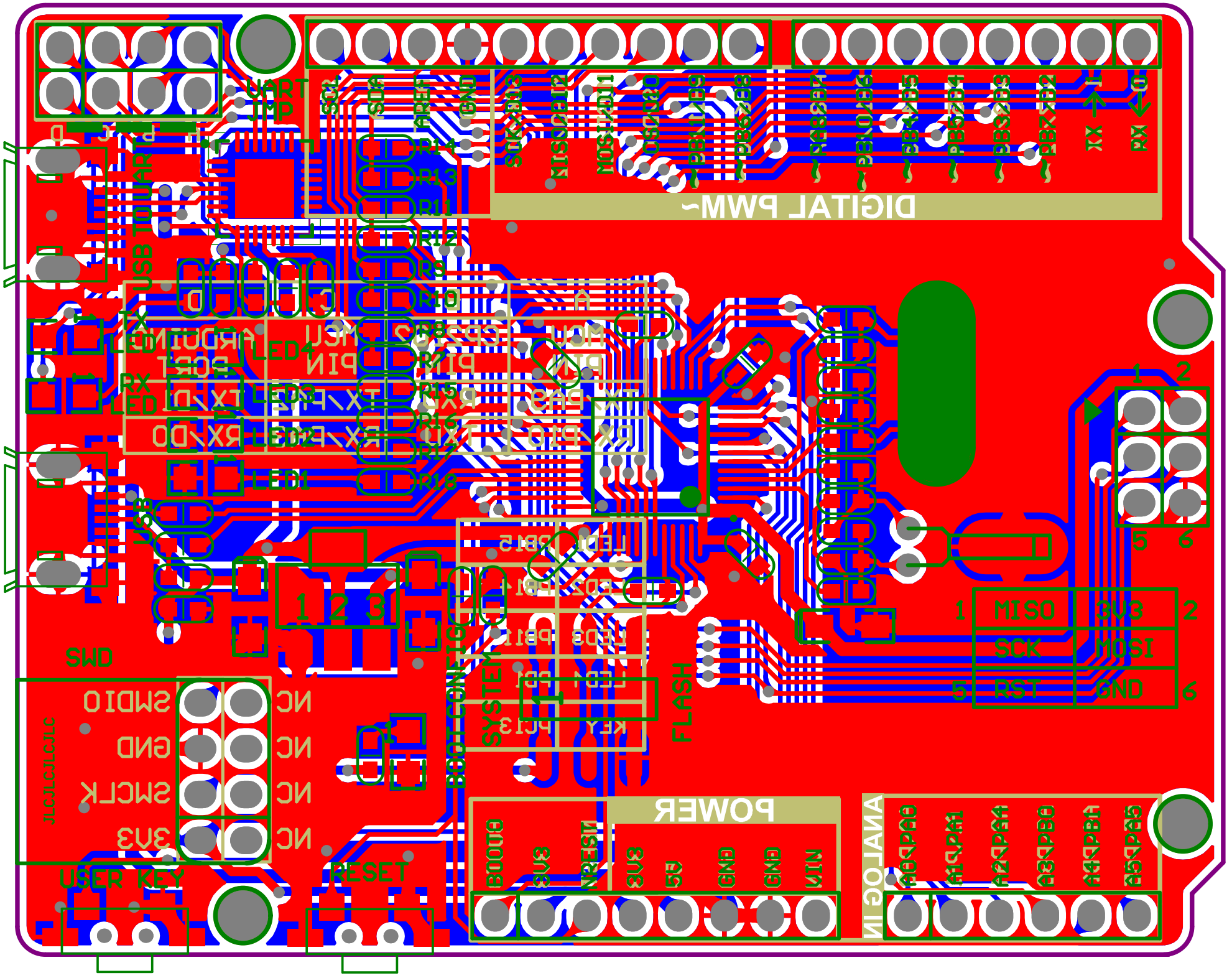
DIGITAL PWM~
POWER
ANALOG IN
FLASH
SYSTEM
SWD
SWDIO
GND
SWCLK
3V3
NC
NC
NC
NC
RESET
USER KEY
MISO
3V3
SCK
MOSI
RST
GND
1
2
3
4
5
6

Comment	Description	Designator	Footprint	LibRef	Quantity
104	Capacitor	C1, C3, C4, C5, C9, C10	0603_s	C_0805	6
10uF	Capacitor	C2, C7, C8	w s_3225_1	C_0805	3
0.1UF		C6	0603_s	CAP104	1
103	Capacitor	C12	0603_s	C_0805	1
USB MICRO B Connector		J1, J2	USB MICRO	USB MICRO B Connector	2
KEY		K1, K2	KEY_1	KEY	2
LED		LED1, LED2, LED3, LED4, LED5, LED6, LED7	0805_LED	LED_0805	7
PWR_LOGO		logo3	PWR_LOGO - 1	PWR_LOGO	1
机制云		LOGO1, LOGO2	机制云—s	机制云	2
luosihole L		luosihole L1, luosihole L2, luosihole L3, luosihole L4	luosikong L-1	luosihole L	4
0R	Resistor	MCU.R1, MCU.R2, MCU.R3, MCU.R4, R7, R8, R9, R10, R11, R12, R13, R14	0603_s	Res1	12
10K	Resistor	MCU.R5, R3, R6	0603_S	R_0805, Res1	3
Header 4X2		P1	Header 4X2	Header 4X2	1
Header 3X2		P3	Header 3x2	Header 3X2	1
Header 10	Header, 10-Pin	P4	Header 10X1	Header 10	1
Header 8	Header, 8-Pin	P5, P8	Header 8X1	Header 8	2
Header 4X2		P6	SIP4_LyingMother X2	Header 4X2	1
Header 6	Header, 6-Pin	P7	SIP6	Header 6	1
1K	Resistor	R1, R2, R5, R15, R16, R17, R18	0603_s	R_0805, Res1	7
4.7K	Resistor	R4	0603_s	Res1	1
sw itch		S1	SWITCH2-1	sw itch2-1	1
STM32F103C		U1	LQFP48-1-L	STM32F103C	1
CP2102GMR		U2	CP2102_QFN28	CP2102GMR	1
LD1117		U3	SOT-223	LD1117	1
22R	Resistor	USB.R1, USB.R2	0603_s	Res1	2
Res1	Resistor	USB.R3	0603_s	Res1	1
25MHz	Crystal Oscillator	X1	CRYSTAL2	XTAL0	1
32.768K	CRYSTAL	X2	CRYSTAL4	XTAL2	1
20pF	Capacitor	XTAL.C1, XTAL.C2	0603_s	C_0805	2
Res2	Resistor	XTAL.R1, XTAL.R2	0603_s	Res2	2
6pF	Capacitor	XTAL1, XTAL2	0603_s	C_0805	2