LAYOUT NO.	5-68217 & 5-68218
SIM.PARTS	2214G1125

UNLESS OTHERWISE SPECIFIED

INTERPRET DRAWING PER ASME Y14.5M-1994
ALL DIMENSIONS IN MILLIMETERS.
ALL OTHER TOLERANCES:
±0.40 ON 2-PLACE DECIMALS
±0.8 ON 1-PLACE DECIMALS
±1° ON ANGULAR DIMENSIONS

ALL MACHINED SURFACE FINISHES 8.9
ALL MACHINED INSIDE CORNERS 0.80 RADIUS.
BREAK ALL SHARP EDGES.
REMOVE ALL BURRS,FINS,FLASH & PROJECTIONS
CASTING TOLERANCES PER STD ISO 8062-3.
FORGING TOLERANCES +1.6-0.8; DRAFTS 7°±1°

REVISIONS

A	RELEASE 2214-G-1255X FOR PROTOTYPE	100564 4-18-06	HT RY
B	ADDED GTOL	102279 12-4-06	JTI LK
C	UPDATED THE DRAWING FOR THE LATEST CASTING CHANGES	104973 09-OCT-07	JTI SN
D	RELEASE 2214-G-1255X FOR PRODUCTION TOOLING	105943 02-13-08	DP KGH
E	REVISED & RELEASED 2214G1255 FOR PRODUCTION. E1-ADDED GTOL & DATUM REFERENCES A & C	106214 04-19-08	JTI KGB
F	1) REPLACE QCC CHART W/ LIST 2) ADDED QCC ITEMS 3) ADDED PROCESS 703 4) WAS 2214-G-1255 5) WAS 2214-F-1254	128899 9-17-15	TAD RDK
G	1) CASTING CREO MODEL REVISED; FINISH CREO MODEL UPDATED 2) ADDED GENERAL NOTES 3) ADDED REFERENCE DIMENSION 4) WAS DETAIL C 5) WAS 5 6) ADDED DIMENSIONS	129184 03-08-16	VRH KGB
H	CASTING CREO MODEL REVISED; FINISH CREO MODEL UPDATED	ECN-139438 05-17-17	VRH GS
J	UPDATED TO LATEST FORMAT. REMOVED MERITOR SYMBOL AND PART IDENTIFICATION MARKINGS FROM CAST MODEL	165777 21-JAN-20	VKH PG

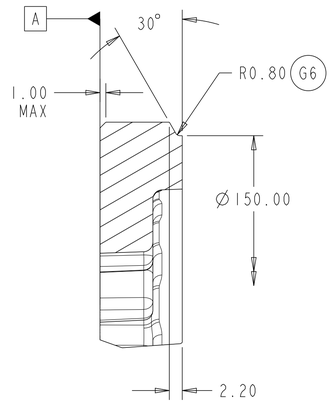

DETAIL B
SCALE 2:1
G4

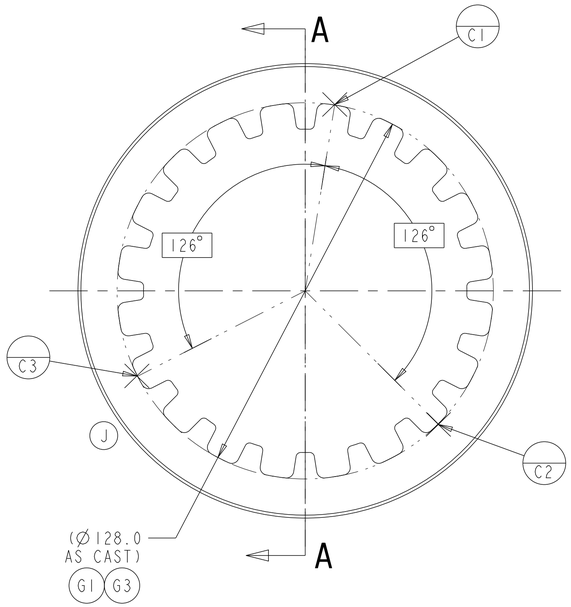

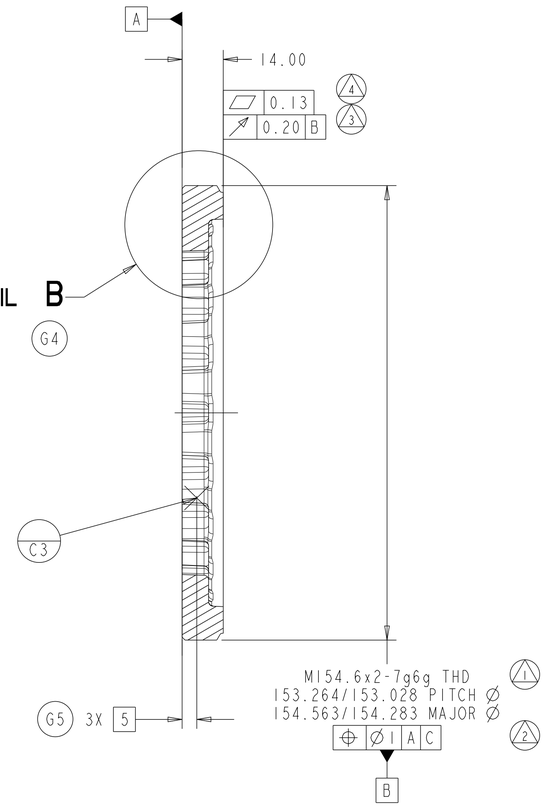

SECTION A-A

F1 QUALITY CONTROL CHARACTERISTICS
DENOTES MAJOR CHARACTERISTIC
1 THREAD SIZE
2 THREAD TRUE POSITION
3 RUNOUT
4 SURFACE FLATNESS
5 HARDNESS - PATTERN

G2 GENERAL NOTES:

1) MACHINED SURFACES MUST MEET REQUIREMENTS IN SECTION 2.4 OF D-1 PER SOUNDNESS LOCATIONS CALLED OUT ON 2214F1254
2) VENDOR INDENTIFICATION REQUIRED, METHOD AND LOCATION MUST BE APPROVED IN WRITING BY MERITOR ENGINEERING. DETAILS TO BE SUBMITTED AND STORED WITH PPAP DOCUMENTATION.

F4

F5

2214F1254	129184	PART/DWG NO. 2214G1255	03200
MAKE FROM	RELEASE	NAME RING-BRG ADJ FIN	ENG.DESC. CODE

APPLY SPECIFIED MERITOR MARKINGS PER DRAFTING ENGINEERING STANDARDS D-004

THIS PRINT IS LOANED ON A CONFIDENTIAL BASIS SUBJECT TO RETURN UPON DEMAND BY MERITOR AND NOTHING HEREON MAY BE REPRODUCED, USED OR DISCLOSED IN WHOLE OR IN PART WITHOUT THE PRIOR WRITTEN PERMISSION OF MERITOR.

MATERIAL SEE MAKE FROM							
PROCESS F2 F3 472 & 703 5	PROJECT ENGINEER	HICKS	3RD ANGLE PROJECTION	DRAWING SIZE D	MERITOR	METRIC
	DRAWN BY	KGB				
	CHECKED BY	VRH				
WEIGHT RGH./FIN. 0.62 kg	SCALE 1:1	DESIGN CONTROL GROUP AXLE REAR NA	CHANGE REQUEST # 100061-35	DRAWING 2214G1255 J.5	MODEL 2214G1255 J.2	SHEET 1 OF 1
	ORIGINAL FOR MS-20-142FA-N					

1 2 3 4 IN. 10THS.
10 20 30 40 50 60 70 80 90 100MM

DO NOT CHANGE MANUALLY