EXPORT_CONTROL:HARD_WARE=EAR - EAR99,EXPORT_CONTROL=EAR - EAR99 STATE :Engineering Released Revision:Z.3

LAYOUT NO.	X-XXXXX
SIM.PARTS	XXXX-X-XXXX

UNLESS OTHERWISE SPECIFIED

INTERPRET DRAWING PER ASME Y14.5M-1994
ALL DIMENSIONS IN MILLIMETERS.
ALL OTHER TOLERANCES:
±0.40 ON 2-PLACE DECIMALS
±0.8 ON 1-PLACE DECIMALS
±1° ON ANGULAR DIMENSIONS

ALL MACHINED SURFACE FINISHES 8.9
ALL MACHINED INSIDE CORNERS 0.80 RADIUS.
BREAK ALL SHARP EDGES.
REMOVE ALL BURRS,FINS,FLASH & PROJECTIONS
FORGING TOLERANCES +1.6-0.8; DRAFTS 7°±1°

REVISIONS

X	REVISED AND REDRAWN FROM VOLVO TO MERITOR FORMAT.	ECN-149519 03-SEP-18	RR CC
Y	Y1-DIMENSION WAS 151±1.25	154540 04-DEC-18	CC DMB
Z	Z1- DIM. WAS R3.2, Z2- ADDED DIM.	ECN-157167 26-MAR-19	CSi CC

QUALITY CONTROL CHARACTERISTICS

△ DENOTES MAJOR CHARACTERISTIC

(1) THREAD SIZE M155 x 2-6g

(2) MATERIAL AND SOUNDNESS

NOTE:
1. RADII UNLESS OTHERWISE STATED R2±1
2. CASTING TOLERANCE UNLESS OTHERWISE STATED ISO 8062-CT-9
3. DRAFT ANGLE 5° MAX UNLESS OTHERWISE STATED.
(2) 4. FOR SOUNDNESS, MICROSTRUCTURE & HARDNESS TEST LOCATION REFER 5-70597

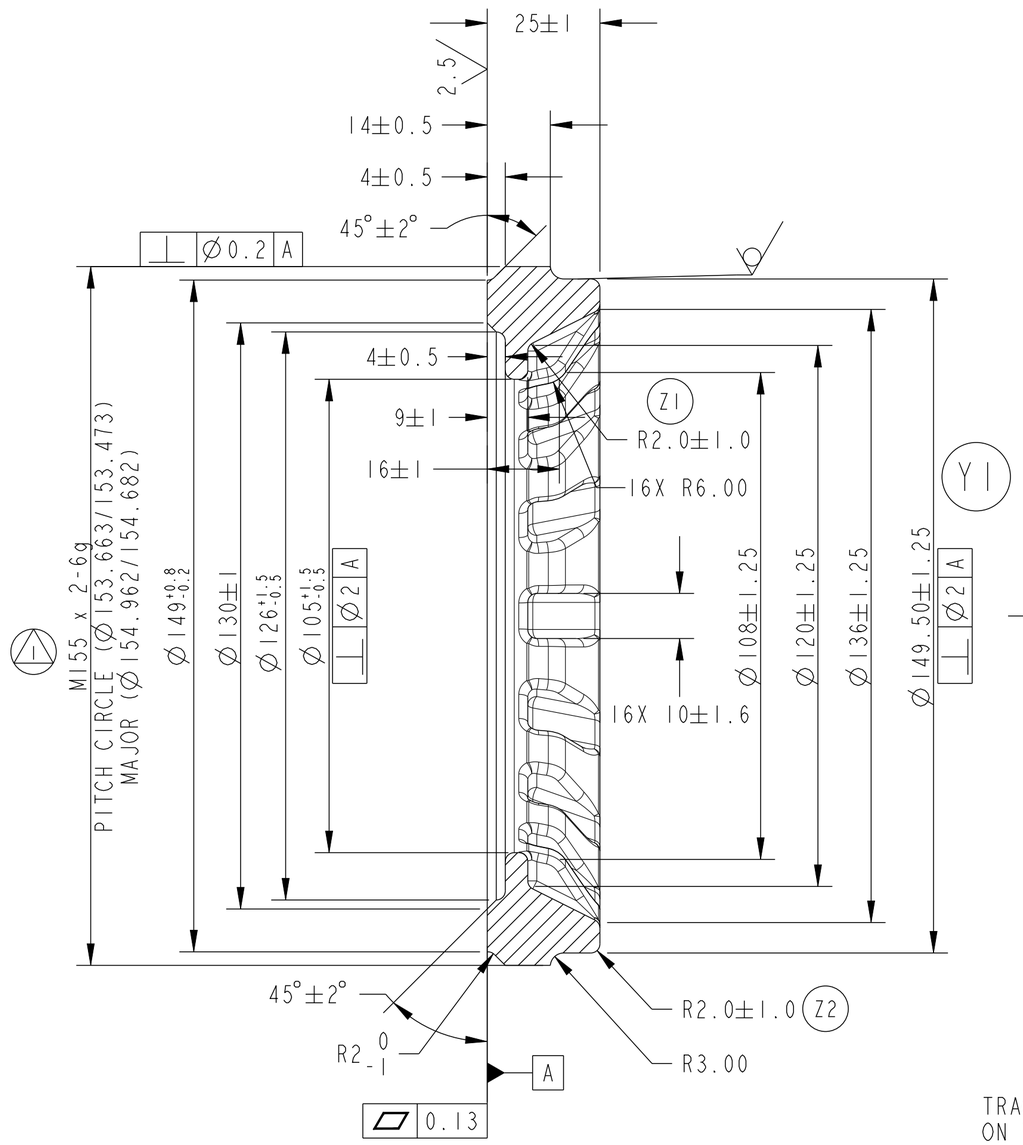

SECTION A-A

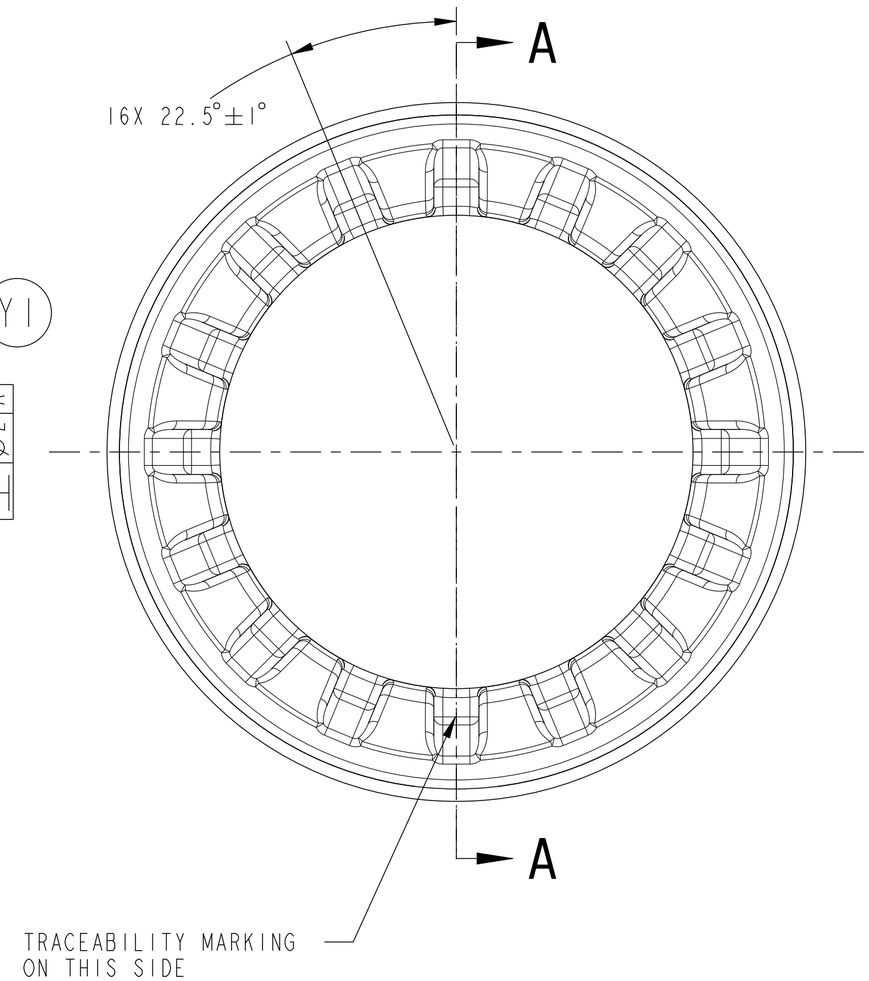

(2) OPTIONAL MATERIAL
SAEJ158, M3210

DO NOT CHANGE MANUALLY

ECN-149519	PART/DWG NO. 1673664		04156
RELEASE	NAME ADJUSTING SCREW (RING-ADJ, FIN.)		ENG. DESC. CODE
DRAWING SIZE C	MERITOR	METRIC	

APPLY SPECIFIED MERITOR MARKINGS PER DRAFTING ENGINEERING STANDARDS D-004

THIS PRINT IS LOANED ON A CONFIDENTIAL BASIS SUBJECT TO RETURN UPON DEMAND BY MERITOR AND NOTHING HEREON MAY BE REPRODUCED, USED OR DISCLOSED IN WHOLE OR IN PART WITHOUT THE PRIOR WRITTEN PERMISSION OF MERITOR.

MATERIAL (2) D-25-1 (2)	PROJECT ENGINEER	C.CESARI	3RD ANGLE PROJECTION	DRAWING SIZE		
PROCESS -	DRAWN BY	RAJA R				
	CHECKED BY	C.CESARI				
IN. 10THS. / 10 20 30 40 50 60 70 80 90 100MM	WEIGHT RGH/FIN 1.306 kg	ORIGINAL FOR DS70/DT100	SCALE 1:1	DESIGN CONTROL GROUP CAMER1	CHANGE REQUEST # CR-134741	DRAWING 1673664_01 Z.2 / MODEL 1673664_01 Z.2 / SHEET 1 OF 1