Part Number
59015572

DO NOT SCALE DRAWING | IF IN DOUBT ASK. | REMOVE ALL BURRS & SHARP EDGES

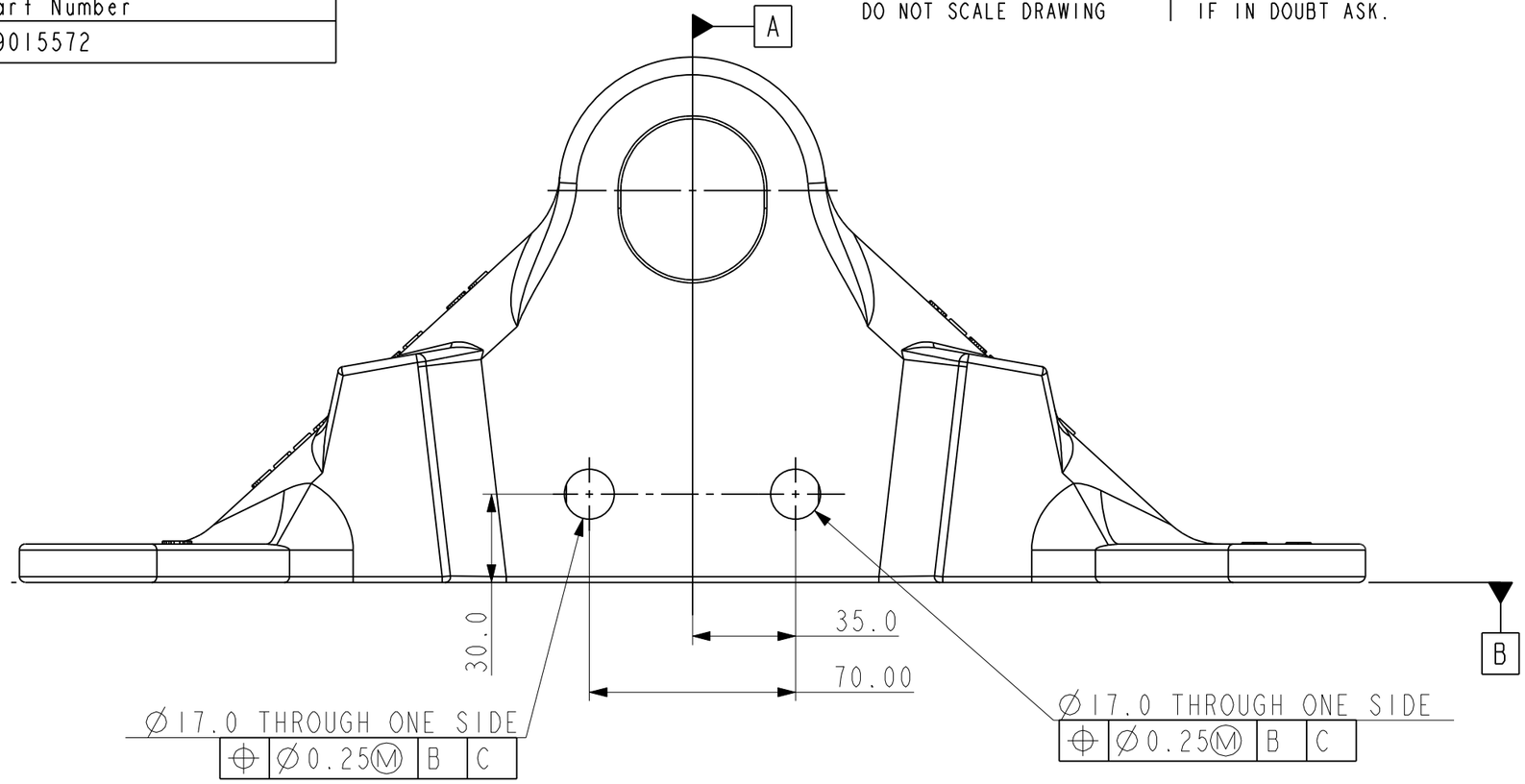

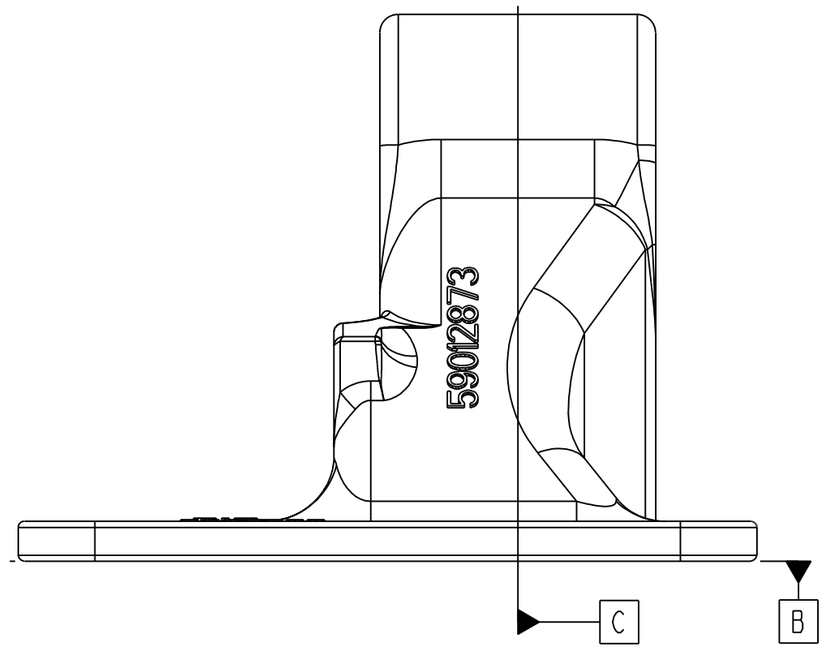

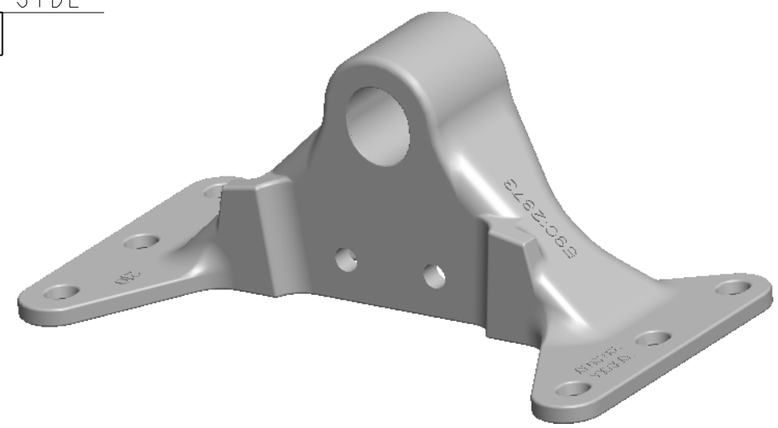

REV.	REVISION DETAILS
A	RELEASED JF 16/09/10 EN 9093
B	DIM 70.0 WAS 50.0 DIM 35.0 WAS 25.0 D.H EN9253 26/04/12
C	THROUGH HOLES Ø17.0 WERE Ø16.5. DATUMS ADDED. TIGHTENED TOLERANCES ON HOLES TO 2 DEC. PLACES. D.H EN934425/01/13

Drafted	Scale	Checked	Date
J.F	1:2		12/10/10

Material	Weight
59012873	13.6kg

ALL DIMENSIONS IN MM UNLESS OTHERWISE STATED
WHOLE MILLIMETRES ±1.5
ONE PLACE DECIMALS ±0.75
TWO PLACE DECIMALS ±0.25
<F> FIT CRITICAL DIMENSION
<S> SAFETY CRITICAL DIMENSION

THIS DRAWING IS LOANED IN STRICT CONFIDENCE, IT REMAINS THE PROPERTY OF THE ISSUING COMPANY AND MUST NOT BE LENT, COPIED OR REPRODUCED WITHOUT THEIR PERMISSION.

FONTAINE

COPYRIGHT, ALL RIGHTS RESERVED
MHT EUROPE

Title: MOUNTING BRACKET 210MM (FW)

Comments:

File Name: DRAWINGS/59/59015/59015572

PROJECTION

Reference:

Part Number: 59015572