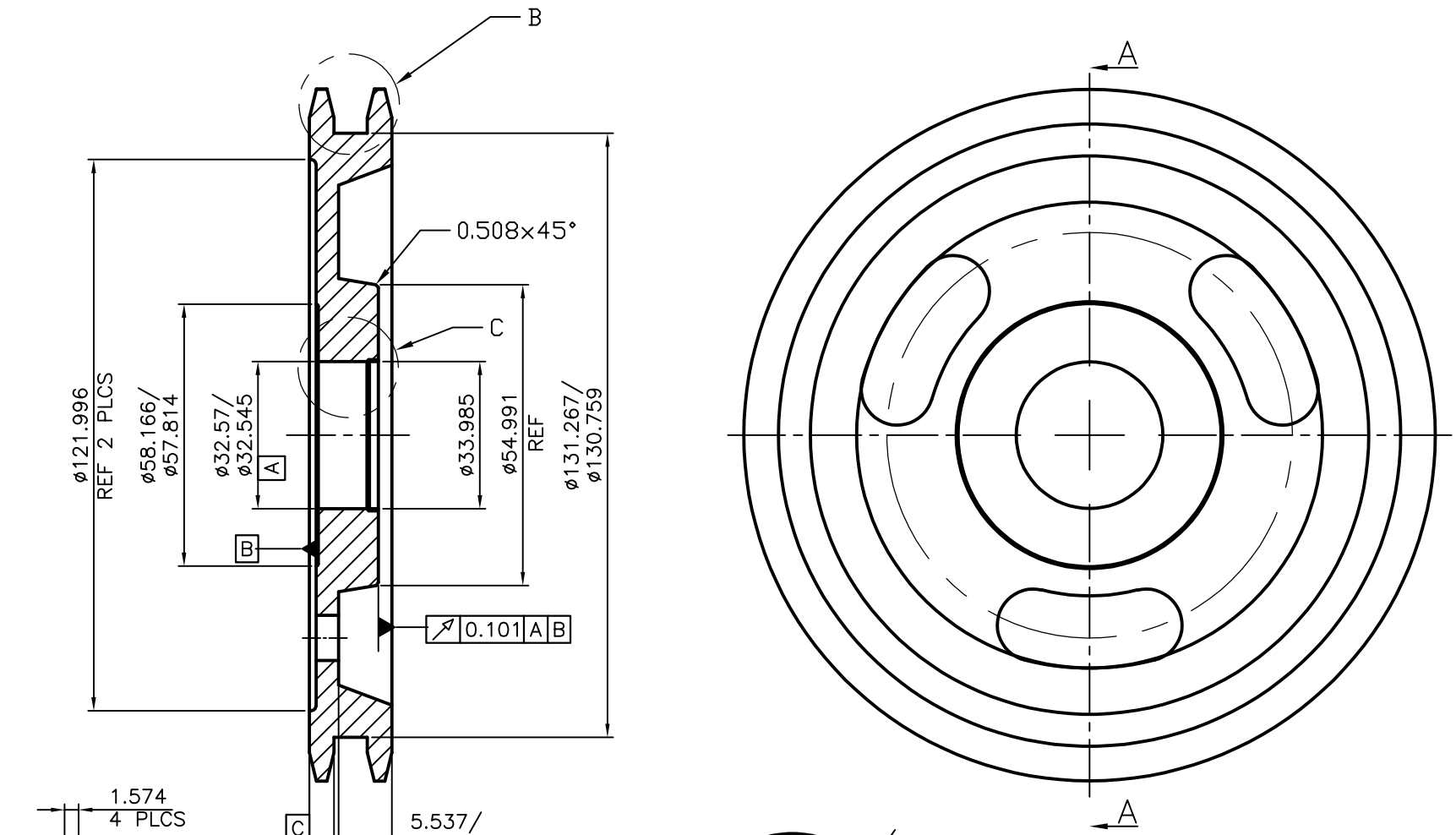

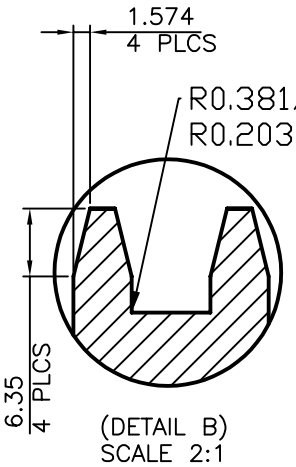

(DETAIL B)
SCALE 2:1

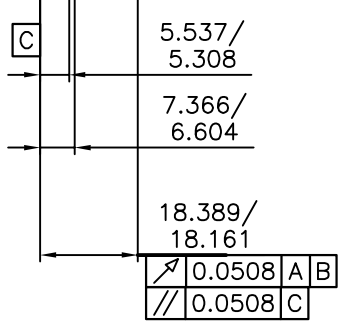

SECTION A–A
SCALE 1:1

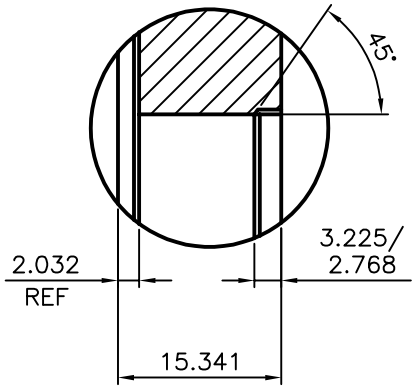

(DETAIL C)
SCALE 2:1

MEI — MADRAS ENGINEERING INDUSTRIES PVT LTD	CUSTOMER: GEP	MATERIAL: DUCTILE IRON D7003	
	COMPT. NO.: GEP14022645	NAME	DATE
		DRAWN: SGR	01/06/23
		CHKD.: XXX	20/06/23
		APPD.	
TITLE: SPROCKET - BLANK		SHEET: 01 of 01	R0
		DRG.NO.: GEP14022645	