EXPORT_CONTROL:HARD_WARE=EAR - EAR99,EXPORT_CONTROL:SAR - EAR99 STATE :Engineering Released Revision:J.8

LAYOUT NO.	5-70186
SIM.PARTS	2214Q1343

UNLESS OTHERWISE SPECIFIED

INTERPRET DRAWING PER ASME Y14.5M-1994
ALL DIMENSIONS IN MILLIMETERS.
ALL OTHER TOLERANCES:
±0.40 ON 2-PLACE DECIMALS
±0.8 ON 1-PLACE DECIMALS
±1° ON ANGULAR DIMENSIONS

ALL MACHINED SURFACE FINISHES 8.9
ALL MACHINED INSIDE CORNERS 0.80 RADIUS.
BREAK ALL SHARP EDGES.
REMOVE ALL BURRS,FINS,FLASH & PROJECTIONS
CASTING TOLERANCES PER STD ISO 8062-3.
FORGING TOLERANCES +1.6-0.8; DRAFTS 7°±1°

REVISIONS

G	CHANGED INDUCTION HARDENING DETAILS AND NOTES	ECN-135318 09/28/16	RM BH
H	H1-REMOVED DIM Ø121.00 H2-ADDED DIM 11.00	ECN-141426 07/25/17	AJB GS
J	J1-ADDED OPT PROCESS SPEC 472 J2-UPDATED NOTE J3-SURFACE FINISH VALUE WAS 0.8	ECN-158648 08-MAY-19	MAS JL

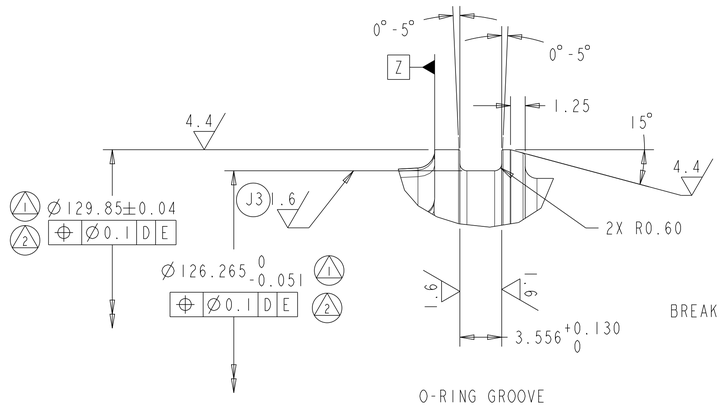

O-RING GROOVE
DETAIL A
SCALE 4:1

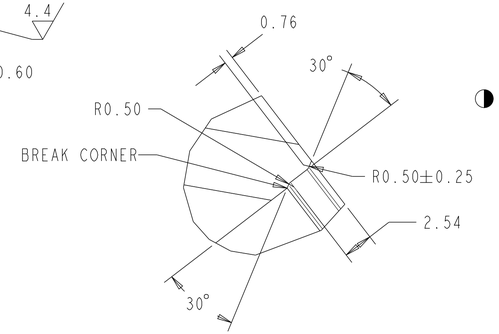

DETAIL B
SCALE 4:1

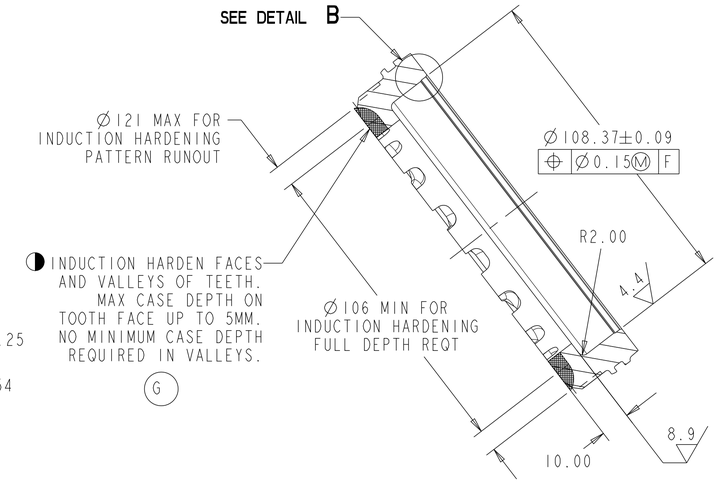

SECTION B-B

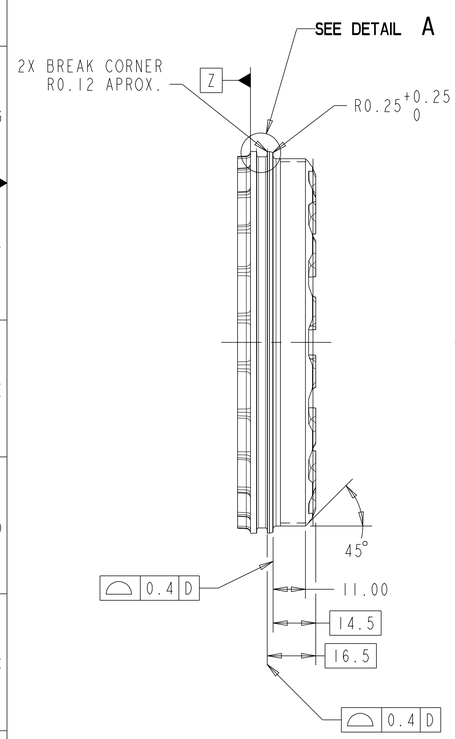

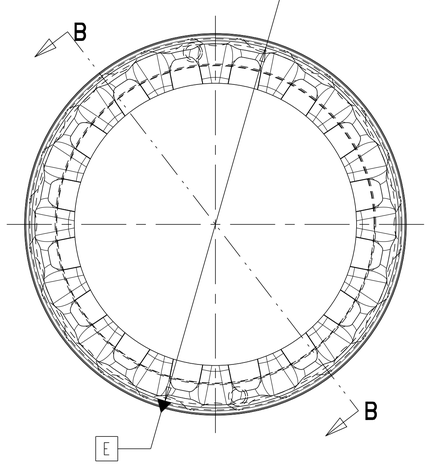

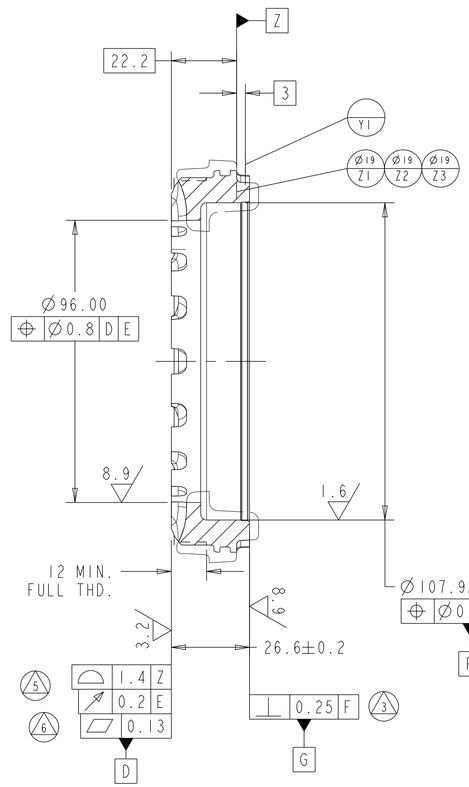

SECTION A-A

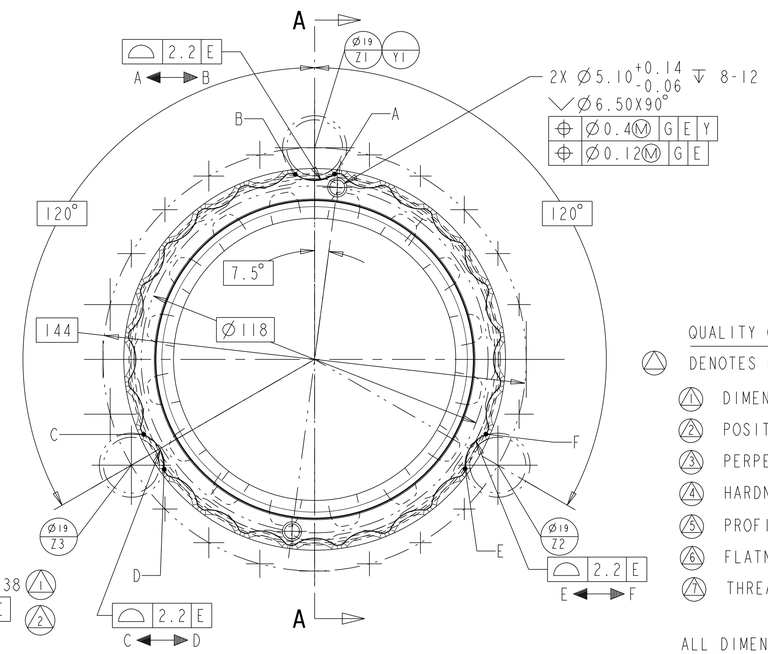

QUALITY CONTROL CHARACTERISTICS

△ DENOTES MAJOR CHARACTERISTIC

1. DIMENSION (3X)
2. POSITION (3X)
3. PERPENDICULARITY (1X)
4. HARDNESS - PATTERN
5. PROFILE (1X)
6. FLATNESS (1X)
7. THREAD PITCH DIAMETER

ALL DIMENSIONS APPLY AFTER PROCESS SPEC 404-D OR 472 (J2)

VENDOR IDENTIFICATION REQUIRED. METHOD AND LOCATION OF IDENTIFICATION MUST BE APPROVED IN WRITING BY MERITOR ENGINEERING. DETAILS TO BE SUBMITTED AND STORED WITH PPAP DOCUMENTATION.

2214R1344	ECN-127045	PART/DWG NO. 2214S1345	03200
MAKE FROM	RELEASE	NAME RING-BRG ADJ,FIN.	ENG.DESC. CODE

APPLY SPECIFIED MERITOR MARKINGS PER DRAFTING ENGINEERING STANDARDS D-004

THIS PRINT IS LOANED ON A CONFIDENTIAL BASIS SUBJECT TO RETURN UPON DEMAND BY MERITOR AND NOTHING HEREON MAY BE REPRODUCED, USED OR DISCLOSED IN WHOLE OR IN PART WITHOUT THE PRIOR WRITTEN PERMISSION OF MERITOR.

MATERIAL SEE MAKE FROM						
PROCESS (4) 404-D ◑ & 703 OPT-472 (J1)	PROJECT ENGINEER BH	3RD ANGLE PROJECTION	DRAWING SIZE D	MERITOR.	METRIC	
	DRAWN BY RM					
	CHECKED BY BH					
WEIGHT RGH./FIN. 0.672 kg	ORIGINAL FOR MV2014	SCALE 1:1	DESIGN CONTROL GROUP AXLE REAR NA	CHANGE REQUEST # CR-131672	DRAWING 2214S1345 J.8	MODEL 2214S1345 J.3	SHEET 1 OF 1

DO NOT CHANGE MANUALLY