LAYOUT NO.	--
SIM.PARTS	--

UNLESS OTHERWISE SPECIFIED

INTERPRET DRAWING PER ASME Y14.5M-1994
ALL DIMENSIONS IN INCHES.
ALL OTHER TOLERANCES:
±.015 ON 3-PLACE DECIMALS
±.03 ON 2-PLACE DECIMALS
±1° ON ANGULAR DIMENSIONS

ALL MACHINED SURFACE FINISHES 350
ALL MACHINED INSIDE CORNERS .030 RADIUS.
BREAK ALL SHARP EDGES.
REMOVE ALL BURRS,FINS,FLASH & PROJECTIONS
CASTING TOLERANCES PER STD ISO 8062-3.
FORGING TOLERANCES +.06 -.03; DRAFTS 7°±1°

REVISIONS

H	REVISED AND REDRAWN TO CREO WITH LATEST FORMAT ---------- 1) WAS FLAT ROOT 2) WAS DIAMETRAL PITCH 3) ADDED ANSI STANDARD NUMBER	159630 29-MAY-19	NHD AF

CIRCULAR TOOTH SPACE WIDTH		
MIN. EFFECTIVE	.0835	1
MIN. ACTUAL	.0853 (REF)	
MAX. ACTUAL	.0866	2

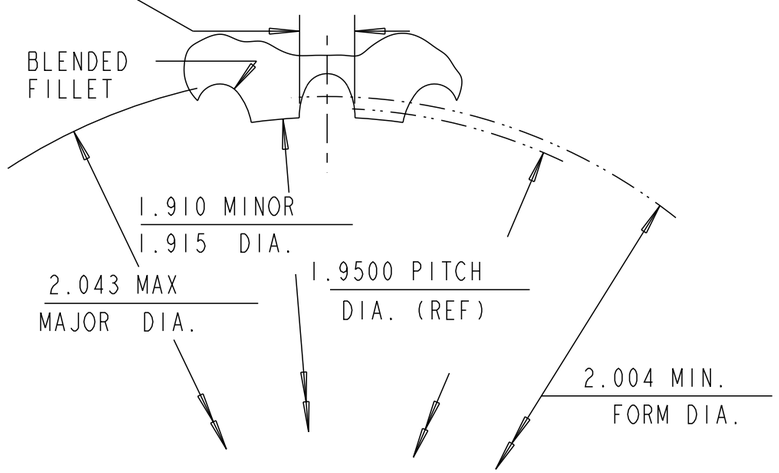

INTERNAL INVOLUTE SPLINE	
H1 FILLET ROOT	SIDE FIT
NUMBER OF TEETH	39
H2 SPLINE PITCH	20/40
PRESSURE ANGLE	37° 30'
MEASUREMENT BETWEEN TWO PINS	1.8326/1.8308
PIN DIAMETER	.0864 FLAT
CLASS 5 (ANSI B92.1-1996)	H3

1 TO BE CHECKED WITH GO COMPOSITE PLUG GAGE

2 TO BE CHECKED WITH NO GO SECTOR GAGE

ALL GEOMETRY CHANGES MUST
BE INCORPORATED ON SOLID MODEL

ER8138969	3-62971	00050
NDI 13599	PART/DWG NO. C400	00050
RELEASE	NAME LAYOUT, 2.00-39 INT INV	ENG. DESC. CODE

APPLY SPECIFIED MERITOR MARKINGS PER DRAFTING ENGINEERING STANDARDS D-004

THIS PRINT IS LOANED ON A CONFIDENTIAL BASIS SUBJECT TO RETURN UPON DEMAND BY MERITOR AND NOTHING HEREON MAY BE REPRODUCED, USED OR DISCLOSED IN WHOLE OR IN PART WITHOUT THE PRIOR WRITTEN PERMISSION OF MERITOR.

MATERIAL

PROCESS ---

PROJECT ENGINEER	---
DRAWN/REDRAWN BY	N.H / NIKETHAN
CHECKED/ RECHECKED BY	P.M / ALEX F

3RD ANGLE PROJECTION

DRAWING SIZE B

MERITOR. INCH

IN.-10THS. 10 20 30 40 50 60 70 80 MM

WEIGHT - RGH/FIN LBS

ORIGINAL FOR -

SCALE 1:1

DESIGN CONTROL GROUP DRIVELINE-TROY

CHANGE REQUEST #

DRAWING C400 H.5

MODEL C400 H.4

SHEET 1 OF 1

DO NOT CHANGE MANUALLY