EXPORT_CONTROL: HARD_WARE=EAR - EAR99,EXPORT_CONTROL=EAR99 STATE: Engineering Released Revision: K.7

NOTES:

1. STANDARD 18N EARWORK PER DWG. C288 (△)
2. FOR 3.00 - 16 SPLINE INFO. SEE DWG C3491 (△)
3. BROACH SPLINE IN POSITION SHOWN WITHIN 11/2° (△)
4. ARROW OR ALIGNMENT MARK MUST BE IN LINE WITH CROSSBORE ON THIS SURFACE.
5. PRESS AND EXPAND PLEX49-2 INTO TABS. MUST BE FULLY SEATED, MUST NOT ROTATE. (C1)
6. UNMACHINED CAST SURFACE.
7. BALANCE PER RSU-B1-00.
8. (△) MAJOR CHARACTERISTIC.
9. PLUG RETENTION STRENGTH PER RSU-16-35

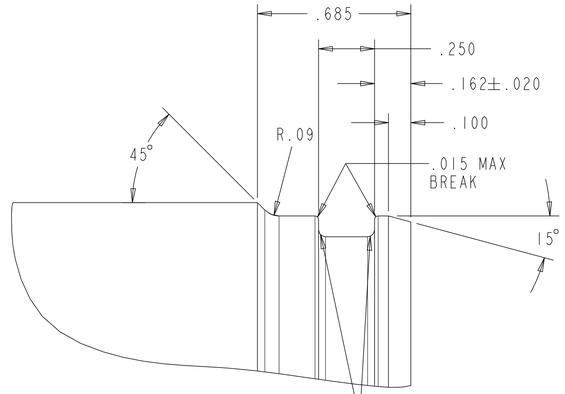

DETAIL B
SCALE 3:1

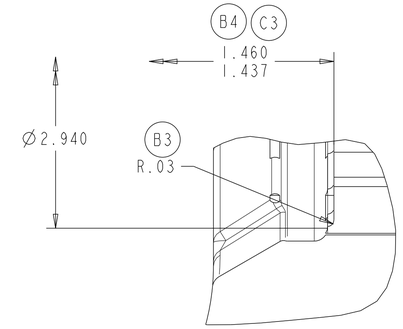

DETAIL A
B2 (SHOWN W/O WELCH PLUG)
SCALE 3:1

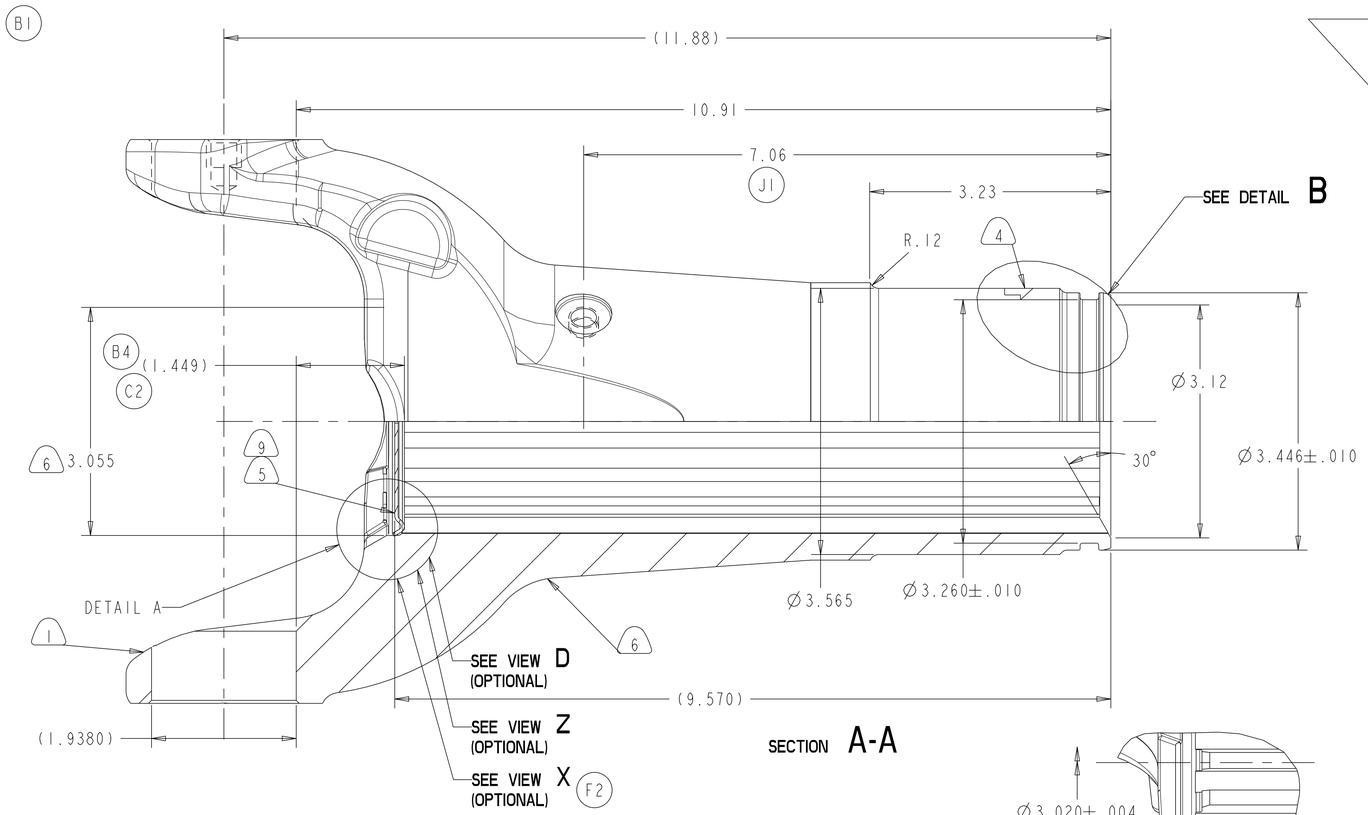

SECTION A-A

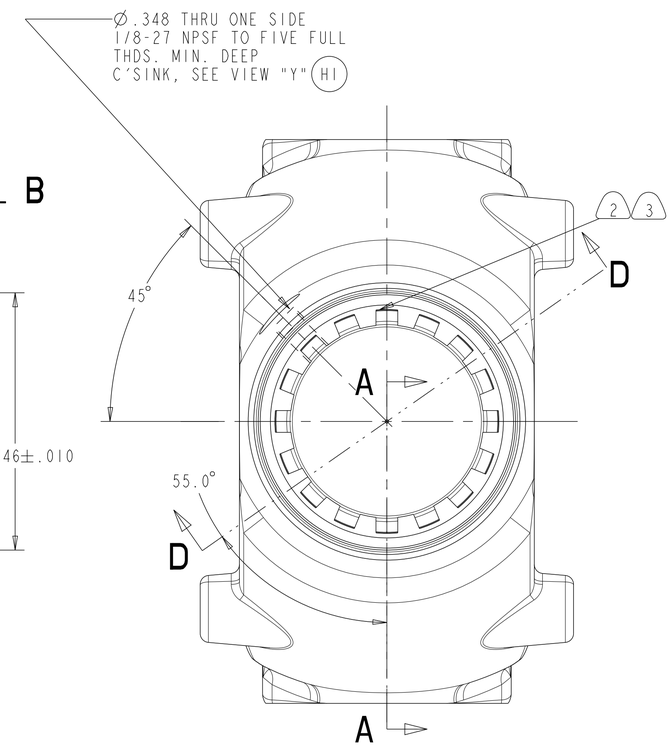

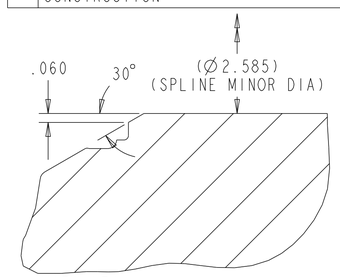

VIEW "Z"
OPTIONAL CONSTRUCTION
SCALE 2:1

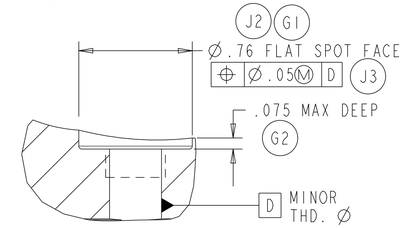

VIEW "Y" H2
SCALE 2:1

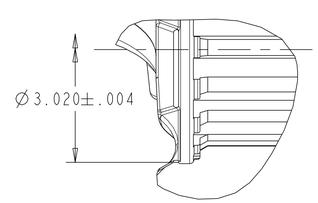

SECTION D-D K
OPTIONAL CONSTRUCTION

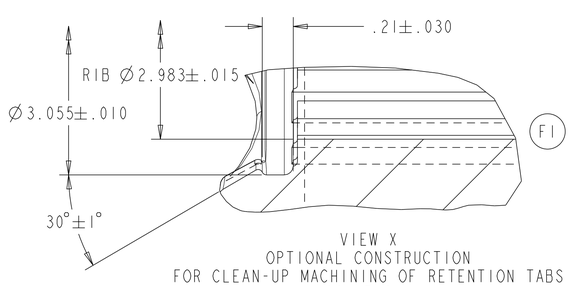

VIEW X
OPTIONAL CONSTRUCTION
FOR CLEAN-UP MACHINING OF RETENTION TABS
SCALE 2:1

LAYOUT NO. -
SIM.PARTS -

UNLESS OTHERWISE SPECIFIED

INTERPRET DRAWING PER ASME Y14.5M-1994
ALL DIMENSIONS IN INCHES.
ALL OTHER TOLERANCES:
±.015 ON 3-PLACE DECIMALS
±.03 ON 2-PLACE DECIMALS
±1° ON ANGULAR DIMENSIONS

ALL MACHINED SURFACE FINISHES 350
ALL MACHINED INSIDE CORNERS .030 RADIUS.
BREAK ALL SHARP EDGES.
REMOVE ALL BURRS,FINS,FLASH & PROJECTIONS
CASTING TOLERANCES PER STD ISO 8062-3.
FORGING TOLERANCES +.06 -.03; DRAFTS 7°±1°

REVISIONS

A	RELEASE FOR PROTOTYPE	99236 12-02-05	DK VAS
B	1)REMOVED NOTE #10 FOR OPTIONAL MACHINING, WHICH WAS REVISED AND IS NOW STANDARD 2)REVISED VIEW TO SHOW THE REVISED STANDARD MACHINING 3-4)ADDED DIMENSIONS	101738 17-Oct-06	BK TL
C	1)CHANGED NOTE 2)WAS (1.500) 3)WAS 1.500	105437 11-30-07	BS TL
D	PRODUCTION RELEASED	107490 8-25-08	DK FP
E	ADDED 18NLS48-28CA1	109767 18-Jun-09	DK MG
F	ADDED VIEW X OPTIONAL CONST.	ECN-128306 08-04-15	TC TL
G	1)Ø.54 FLAT SPOT FACE WAS Ø.54 FLAT SPOT FACE .030/.050 MAX 2)ADDED .075 MAX DEEP DIM	ECN-152977 10-10-18	RPW JO
H	1)REMOVED Ø.44 X 90°, FOR OPTIONAL 2)REMOVED OPTIONAL	ECN-183852 4-NOV-21	AF CS
J	1)WAS 7.59 2)WAS Ø.54 3)ADDED G,D & T	ECN-184205 23-NOV-21	AF CS
K	ADDED VIEW AND DIMENSION Ø3.020±.004 FOR OPTIONAL CONSTRUCTION	ECN-189960 20-JUN-22	MP AF

MAKE FROM	RELEASE	NAME	ENG.DESC. CODE
18NLS48-28C SERUR39-2, DEFR61-1 & 1199-N-1860	109767	18NLS48-28CA1	03797
18NLS48-28C SERUR40-9 & 1199N1860	99236 107490	18NLS48-28CA	03797
18N165C	99236 107490	PART/DWG NO. 18NLS48-28C	03720

APPLY SPECIFIED MERITOR MARKINGS PER DRAFTING ENGINEERING STANDARDS D-004

THIS PRINT IS LOANED ON A CONFIDENTIAL BASIS SUBJECT TO RETURN UPON DEMAND BY MERITOR AND NOTHING HEREON MAY BE REPRODUCED, USED OR DISCLOSED IN WHOLE OR IN PART WITHOUT THE PRIOR WRITTEN PERMISSION OF MERITOR.

MATERIAL: SEE TABLE
PROCESS: -

PROJECT ENGINEER	T.L.
DRAWN BY	V.A.S
CHECKED BY	C.S.

3RD ANGLE PROJECTION
DRAWING SIZE: D
MERITOR.
INCH

1 2 3 4 IN. 10THS. 10 20 30 40 50 60 70 80 90 100MM

WEIGHT RGH./FIN.	ORIGINAL FOR	SCALE	DESIGN CONTROL GROUP	CHANGE REQUEST #	DRAWING	MODEL	SHEET
20.493 LBS	-	1:1	DRIVELINE-TROY	102136-006	18NLS48-28C K.7	18NLS48-28C K.4	1 OF 1

DO NOT CHANGE MANUALLY