THIS DRAWING IS COPYRIGHTED AND CONFIDENTIAL TO SCHAFER DRIVELINE, LLC. THOSE HAVING ACCESS TO THIS WORK MAY NOT COPY IT, USE IT OR DISCLOSE THE INFORMATION CONTAINED WITHIN THIS WORK WITHOUT THE EXPRESS WRITTEN AUTHORIZATION OF SCHAFER DRIVELINE, LLC. UNAUTHORIZED USE MAY RESULT IN PROSECUTION.

WORK ORDER	REV	REVISION DESCRIPTION	SHEET	ZONE	DATE	CHG BY	APP BY
S14-138	--	RELEASED FOR PRODUCTION	--	--	09/04/14	AR	CML
S18-130	A1	ADDED NUMBERS TO NOTES	--	B3	07/23/18	AMS	SS
	A2	ADDED NOTE FOR OPTIONAL PAINT		B3			
S20-181	B	ADDED DATE OF MACHINING NOTE	--	B5	12/10/20	AMS	JEH

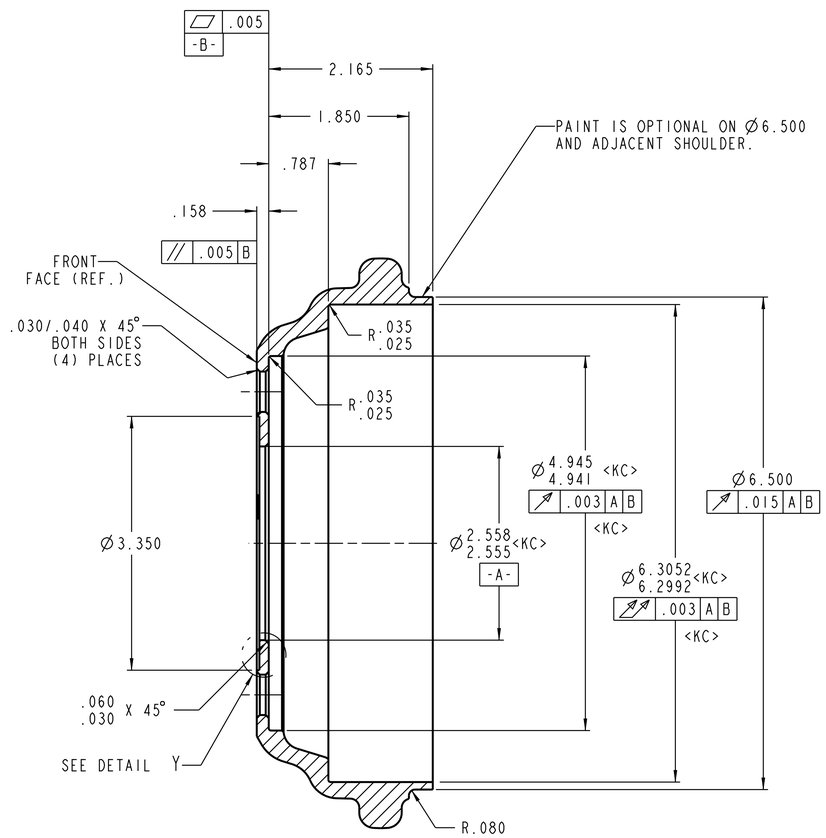

SECTION Z-Z

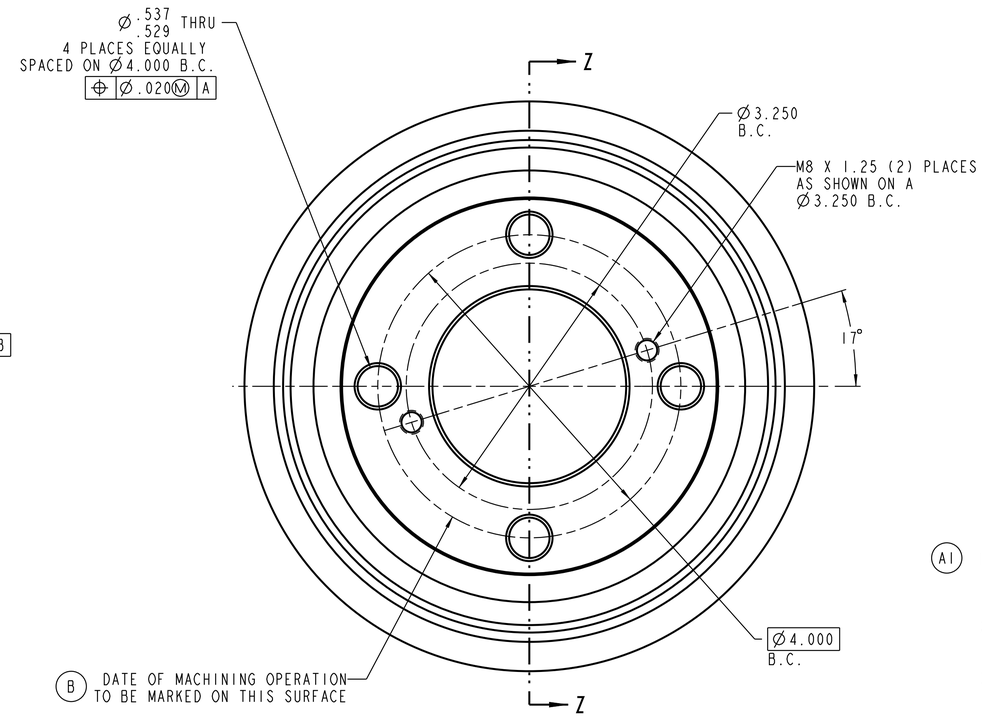

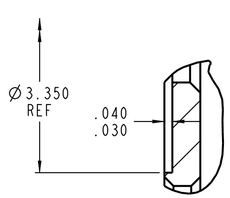

DETAIL Y
SCALE 3:1

A1 NOTES:

1. REMOVE ALL BURRS AND SHARP EDGES.
2. ALL MACHINED SURFACES TO BE COATED WITH A RUST INHIBITOR.
3. UNLESS OTHERWISE SPECIFIED ALL MACHINED SURFACES TO BE RMS 125 MAX.
4. PAINT OUTSIDE SURFACES, EXCEPT FRONT FLANGE SURFACE, WITH EPOXY POLYESTER POWDER COATING. PAINT THICKNESS TO BE .002-.003.

A2 5. OPTIONAL PAINT: BLACK NITRYL BASE PAINT 0.0008-0.0025 THICK.

6. PAINTED SURFACES TO HAVE A MAXIMUM OF 10 PERCENT RED RUST AFTER 96 HOURS OF CONTINUOUS SALT SPRAY PER ASTM B117-97.
7. NO PAINT ALLOWED ON SURFACES OF Ø6.3052/6.2992, Ø4.945/4.941, Ø2.558/2.555, IN M8X1.25 HOLES, OR ON FRONT FACE.
8. PAINT IS ACCEPTABLE, BUT NOT REQUIRED ON OTHER INSIDE SURFACES.
9. PAINTED SURFACE MUST BE FLAT, NO DEFECTS.

SHEET 1 OF 1	<KC> DENOTES KEY CHARACTERISTIC PER SCHAFER ENGINEERING SPECIFICATION FES-001	DO NOT SCALE DRAWING	GEOMETRIC DIMENSIONING & TOLERANCING PER ANSI Y14.5M	DIMS ARE IN INCHES DIMS IN [ ] ARE MM	UNLESS OTHERWISE SPECIFIED 2 PLACE DECIMALS ±.030 3 PLACE DECIMALS ±.010 ANGLES ±5°

REFERENCES	MATERIAL		NAME	DATE	DESCRIPTION
012WA135 012WA133	-----	DRAWN	ANAND	09/04/14	BRAKE DRUM, FINISH HEAVY DUTY
		CHECKED	CRB	09/04/14	
		APPROVED	CML	09/04/14	
SURFACE TREATMENT	HEAT TREATMENT	SCHAFER DRIVELINE, LLC FREDERICKTOWN, OHIO, USA			PART NO. 012WA137
-----	-----				REV B
D MODEL H-12	MAKE FROM 012WA132				

CHANGE ONLY IN PRO/E