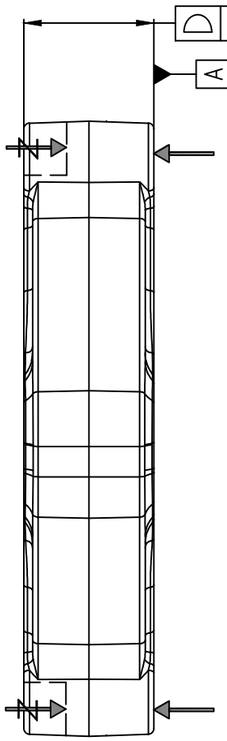

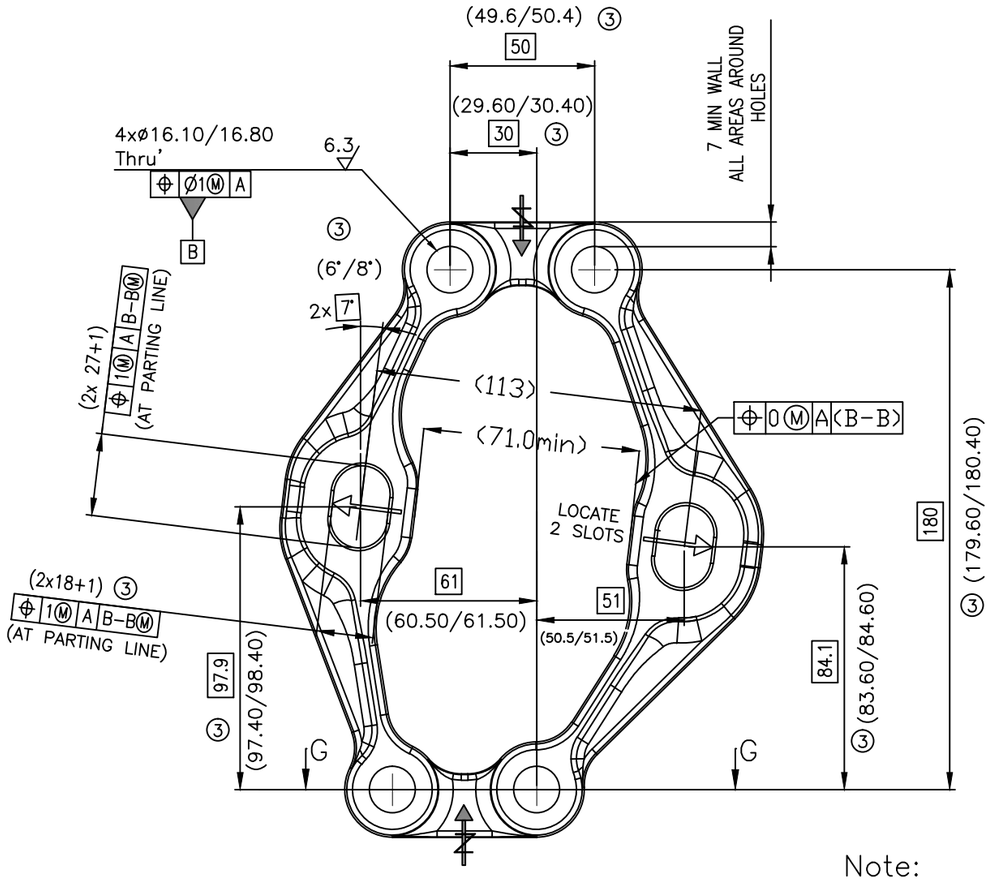

Note:

1. Machining surface to be free from sharp edges

3	22.06.24	Tolerance Updated	NK
2	29.09.23	ø16.10/16.80 was ø16+1 (due to ED coating)	LN
1	15.03.23	Process change updates: for as cast slot (27+1), (18+1) and75mm/ broaching introduced	RR
0	18.05.21	New Release	LN

Revision Details

MADRAS ENGINEERING INDUSTRIES PVT LTD

Customer: VOLVO

Material: Refer Casting Dwg

Dwg.No./Rev.: 23888199 / 02

Part.No./Rev.: 23888194 / P03

Dimension are in mm Scale NTS

DRAWN BY	RR	18.05.21
CHECKED BY	NK	18.05.21
APPROVED BY	DBK	18.05.21

SHEET 01of 01

TITLE

OP30- GANG DRILLING

BRACKET TORQUE ROD

Stage Dwg No.

23888194 - 30

CLAMP | REST | ORIENT | LOCATE | SPRING LOADED