DO NOT SCALE DRAWING. | IF IN DOUBT ASK. | REMOVE ALL BURRS & SHARP EDGES

Part Number
59013212

REV	Revision Details
A	RELEASED EC6279 20/05/99 A.H.
B	FOUNDRY AND HEAT CODE DETAIL ADDED EN6946 27/07/00 A.H.
C	ADDED DETAIL D FOR BOTTLE NECK AND SLOTTED HOLES WERE ∅17 WITH ∅18 DRAFT EN8035 02/12/04 SMC
D	REDRAWN TO PROE SLOT DETAIL CHANGED SEE SECTION C-C. OVERALL F/W HEIGHT "230" ADDED J.L. 02/03/05 EN8092
E	REPRESENTATION CHANGED TO SUIT MDT5 DRAWING. NO PHYSICAL CHANGE EN8112 J.L. 06/05/05
F	DIM 47.5 WAS 59.5 R31 TYP WAS R30 TYP J.L. EN8143 05/08/05
G	SECT F WAS PROJ VIEW DIM'S 153,R3,228.5 REM'D.DATUM A ADDED. GDT ON DIM R44.2 WAS ◎∅1.2C GDT ⏥1.5 WAS —1.5 VIEWS OF LETTERING ADDED ZONES C4 & C7 GENERAL VIEW, DIM'S R25,R20,R40,R12,191, 53,172 REM'D.DIM 85 WAS 75, 53 WAS 55. DIM 90 WAS 60. GDT ADDED TO DIM 203 GDT DIM 406 WAS //0.5C. PROJECTED VIEW DIM'S R12,82 REM'D.DIM'S R2,203,101.5,154, 161,R30 ADDED SECTION ARROWS B,C,D ADDED. SECT E WAS C, DETAIL E WAS SECT D, DIM 24 WAS 26, 21 WAS 23, 26 WAS 28. SECTION D ADDED,SECT C WAS A, DIM R3,R12,R20,R10, DETAIL A R2 REM'D. NOTE ADDED. DETAIL B ADDED FIFTHWHEEL HIEGHT NUMBERING . PROJ VIEW DIM R6, R10,15 REM'D. GDT ADDED TO DIM 225 NOTE MOVED FROM ZONE A10 TO G15 J.F. EN8865 28/10/08
H	E-COAT SPEC ADDED D.H EN9227 30/01/12
I	DIM OF 230 IN E7 WAS CHANGED FROM 85 TO 75 DATUM B WAS ADDED SECTION D-D WAS CHANGED POSITION OF MOUNTING HOLES AT E7 WAS CHANGED FROM 93 TO 92.5 G.A EN9266 30/04/2012
J	HATCHED AREA ADDED D.H EN9291 11/07/12
K	DIM 90.0-92.0 IN A11 WAS 88.0-90.0 G.A EN9506 07/01/14

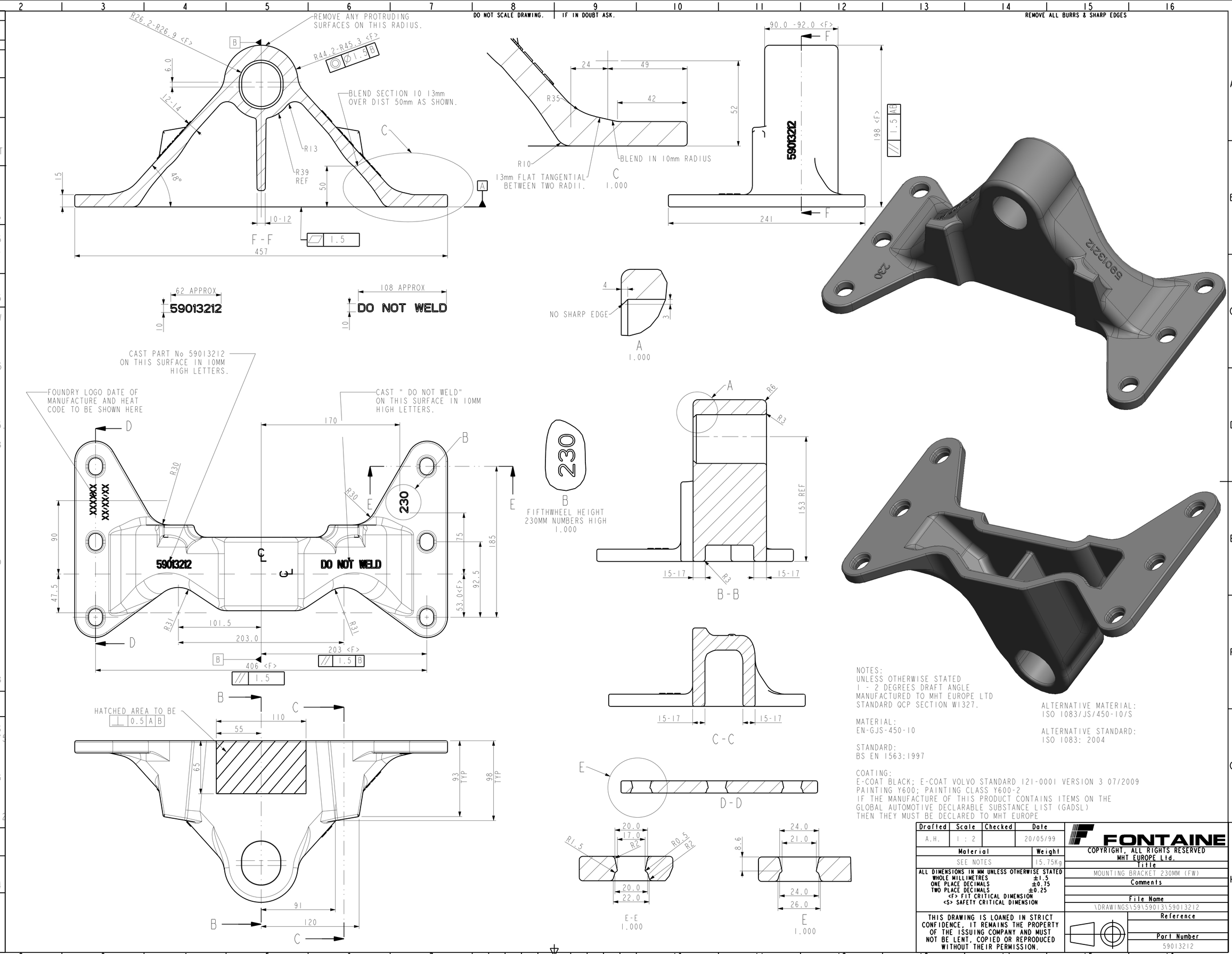

NOTES:
UNLESS OTHERWISE STATED
1 - 2 DEGREES DRAFT ANGLE
MANUFACTURED TO MHT EUROPE LTD
STANDARD QCP SECTION W1327.

MATERIAL:
EN-GJS-450-10

STANDARD:
BS EN 1563:1997

COATING:
E-COAT BLACK; E-COAT VOLVO STANDARD 121-0001 VERSION 3 07/2009
PAINTING Y600; PAINTING CLASS Y600-2
IF THE MANUFACTURE OF THIS PRODUCT CONTAINS ITEMS ON THE GLOBAL AUTOMOTIVE DECLARABLE SUBSTANCE LIST (GADSL) THEN THEY MUST BE DECLARED TO MHT EUROPE

ALTERNATIVE MATERIAL:
ISO 1083/JS/450-10/S

ALTERNATIVE STANDARD:
ISO 1083: 2004

Drafted	Scale	Checked	Date
A.H.	1 : 2		20/05/99

Material	Weight
SEE NOTES	15.75Kg

ALL DIMENSIONS IN MM UNLESS OTHERWISE STATED
WHOLE MILLIMETRES ±1.5
ONE PLACE DECIMALS ±0.75
TWO PLACE DECIMALS ±0.25
<F> FIT CRITICAL DIMENSION
<S> SAFETY CRITICAL DIMENSION

THIS DRAWING IS LOANED IN STRICT CONFIDENCE, IT REMAINS THE PROPERTY OF THE ISSUING COMPANY AND MUST NOT BE LENT, COPIED OR REPRODUCED WITHOUT THEIR PERMISSION.

FONTAINE

COPYRIGHT, ALL RIGHTS RESERVED
MHT EUROPE Ltd.

Title: MOUNTING BRACKET 230MM (FW)

Comments:

File Name: \DRAWINGS\59\59013\59013212

Reference:

Part Number: 59013212