EXPORT_CONTROL: HARD_WARE=EAR - EAR99,EXPORT_CONTROL=EAR - EAR99 STATE: Engineering Released Revision: N.4

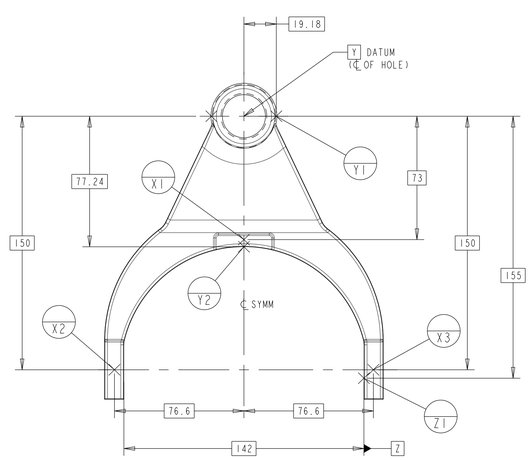

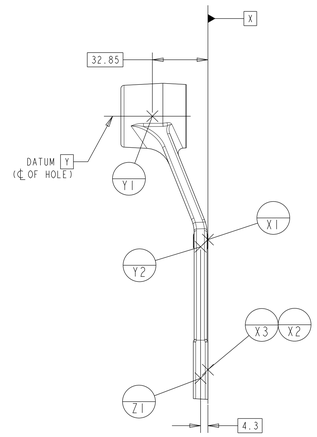

SCALE 3:4

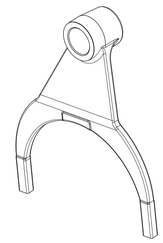

ISO VIEW
SCALE 1:2

(J1)

INSPECTION DATUM LEGEND

CASTING SETUP DATUMS :
- -X- ESTABLISHES VERTICAL PLANE THRU DATUM TARGET POINTS X1, X2 & X3
- -Y- DATUM AXIS THRU DATUM TARGET POINTS Y1 & Y2
- -Z- DATUM TARGET POINT Z1 (ESTABLISHES VERTICAL ℄ OF FORKS)

MACHINE DATUMS :
- -A- PISTON MOUNTING SURFACE
- -B- PUSH ROD BORE

LAYOUT NO.	-
SIM.PARTS	A-3296T1086

UNLESS OTHERWISE SPECIFIED

INTERPRET DRAWING PER ASME Y14.5M-1994
ALL DIMENSIONS IN MILLIMETERS.
ALL OTHER TOLERANCES:
±0.40 ON 2-PLACE DECIMALS
±0.8° ON 1-PLACE DECIMALS
±1° ON ANGULAR DIMENSIONS

ALL MACHINED SURFACE FINISHES 8.3
ALL MACHINED INSIDE CORNERS 0.80 RADIUS.
BREAK ALL SHARP EDGES.
REMOVE ALL BURRS,FINS,FLASH & PROJECTIONS
CASTING TOLERANCES PER STD ISO 8062-3.
FORGING TOLERANCES +1.6-0.8; DRAFTS 7°±1°

REVISIONS

J	1-REFORMATED DRAWING BY ADDING DATUM REFERENCE VIEWS 2-UPDATED DATUM NAMINGS PER NEW STD 3-UPDATED GD&T AND THE DATUM REFERENCE 4-REMOVED MATERIAL AND PROCESS SPEC TABLE 5-ADDED PROCESS SPEC 456-B & 703 6-ADDED GENERAL NOTES 7-ADDED QCC LIST 8-ADDED DIMENSION 9-DIM WAS 77.35 10-ADDED SECTION B-B 11-UPDATED DRAWING FORMAT 12-DIM WAS 141.25±0.75	144079 7-MAR-18	FC VMJ
K	1-ADDED OPTIONAL CLEAN UP NOTE 2-ADDED 0.1 MIN DIM 3-ADDED 8.65±0.25 DIM & QCC 5 4-ADDED QCC 5:PAD WIDTH 5-REVISED GENERAL NOTES	ECN-166184 30-JAN-20	PJG GS
L	1-REVISED NOTE 2&3-1.5 MIN ADDED	ECN-170088 22-JUL-20	JO GS
M	1-NOTE REVISED 2-3-DIM'S REVISED 4-TOTAL CASE DEPTH NOTE ADDED 5-REMOVED -Y- DATUM REFERENCE	ECN-185776 16-MAR-22	BWS GS
N	N1-DIM WAS 6MM N2-ADDED "4MM MAX" NOTE	191515 25-AUG-22	BWS TM

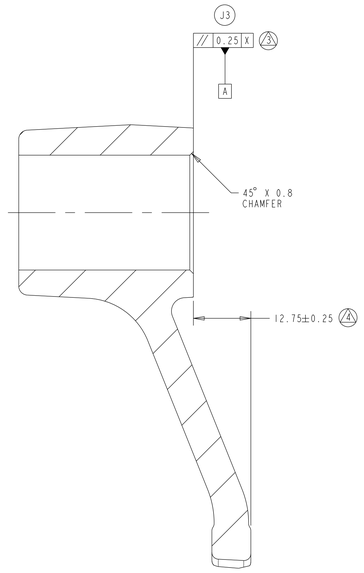

DETAIL A
SCALE 2:1

(J4)

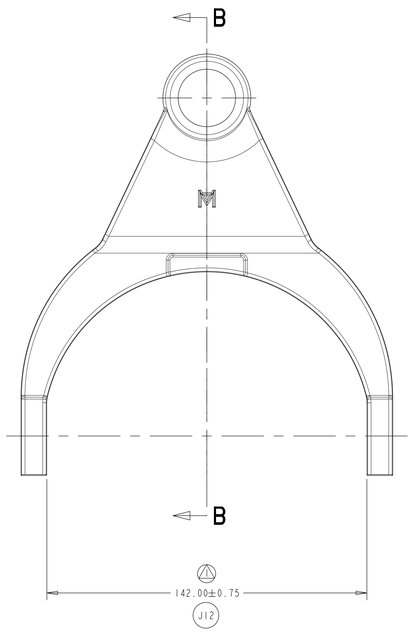

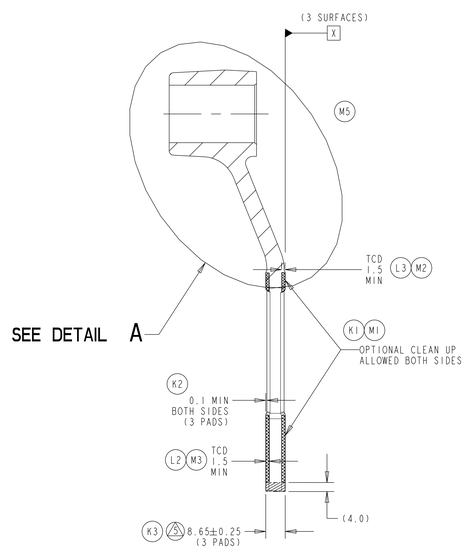

(J10) (M4) SECTION B-B
TOTAL CASE DEPTH (TCD)

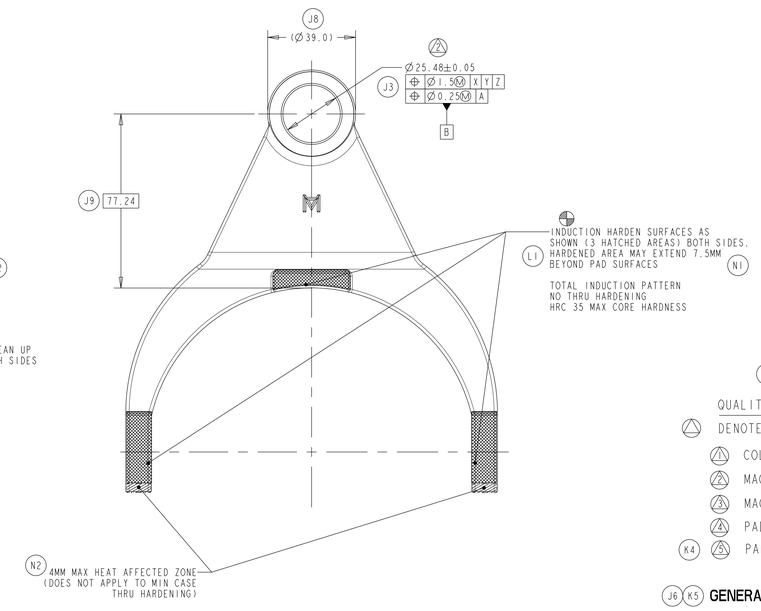

(J7)

QUALITY CONTROL CHARACTERISTICS

DENOTES MAJOR CHARACTERISTIC

- COLLAR OPENING
- MACHINED BORE
- MACHINE SURFACE FACE
- PAD LOCATION
- (K4) PAD WIDTH

(J6) (K5) **GENERAL NOTES:**

1) MACHINED SURFACES MUST MEET REQUIREMENTS IN SECTION 2.4 OF D-1 PER SOUNDNESS LOCATIONS CALLED OUT ON CASTING DRAWING 3296A1327
2) NO TYPE 1 DECARBURIZATION PER SAE J419 IS ALLOWED ON INDUCTION HARDENED SURFACES

3296A1327	84308	PART/DWG NO. 3296B1328	03190
MAKE FROM	RELEASE	NAME FORK-SHIFT, FIN.	ENG.DESC CODE

APPLY SPECIFIED MERITOR MARKINGS PER DRAFTING ENGINEERING STANDARDS D-004

THIS PRINT IS LOANED ON A CONFIDENTIAL BASIS SUBJECT TO RETURN UPON DEMAND BY MERITOR AND NOTHING HEREON MAY BE REPRODUCED, USED OR DISCLOSED IN WHOLE OR IN PART WITHOUT THE PRIOR WRITTEN PERMISSION OF MERITOR.

MATERIAL	SEE MAKE FROM				
PROCESS	456-B & 703 (J5)	PROJECT ENGINEER	SCHAKEL	3RD ANGLE PROJECTION	DRAWING SIZE E
		DRAWN BY	M.A.S.		
		CHECKED BY	M.A.S.		
WEIGHT RGH./FIN.	0.631 kg	ORIGINAL FOR RP/RD-160	SCALE 1:1	DESIGN CONTROL GROUP AXLE REAR NA	CHANGE REQUEST # AVV-643

MERITOR. METRIC

DRAWING	MODEL	SHEET
3296B1328 N.4	3296B1328 N.1	1 OF 1

DO NOT CHANGE MANUALLY