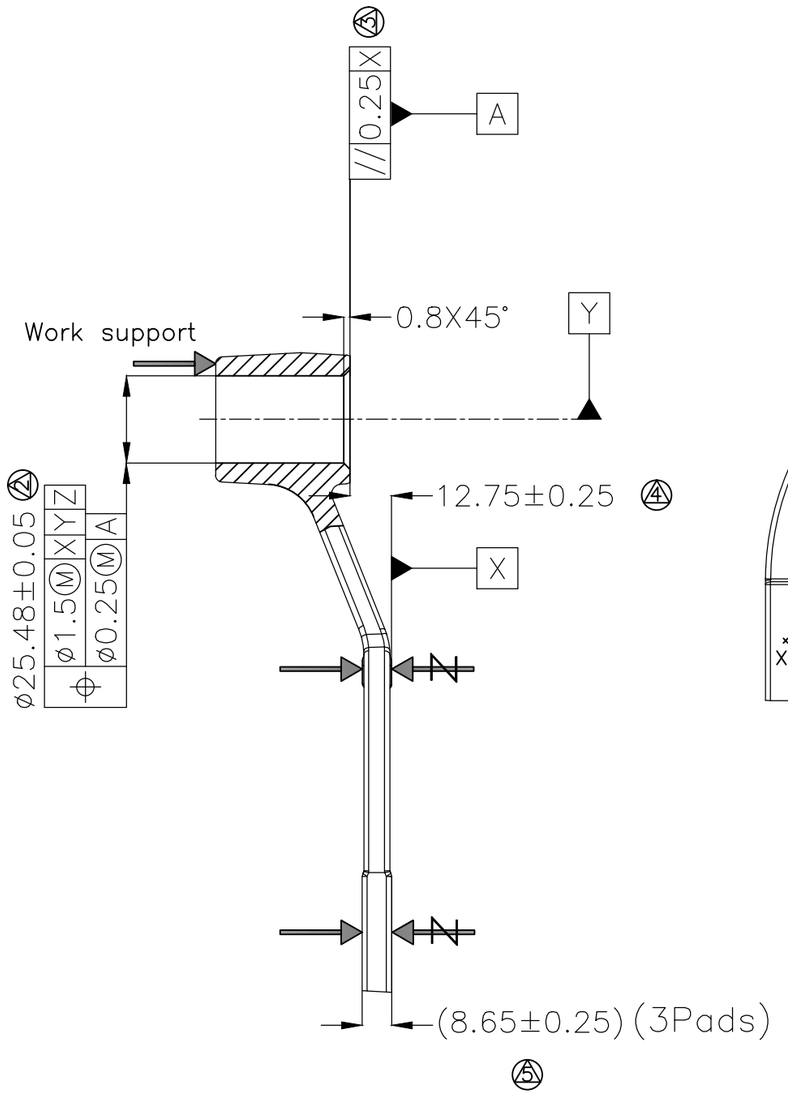

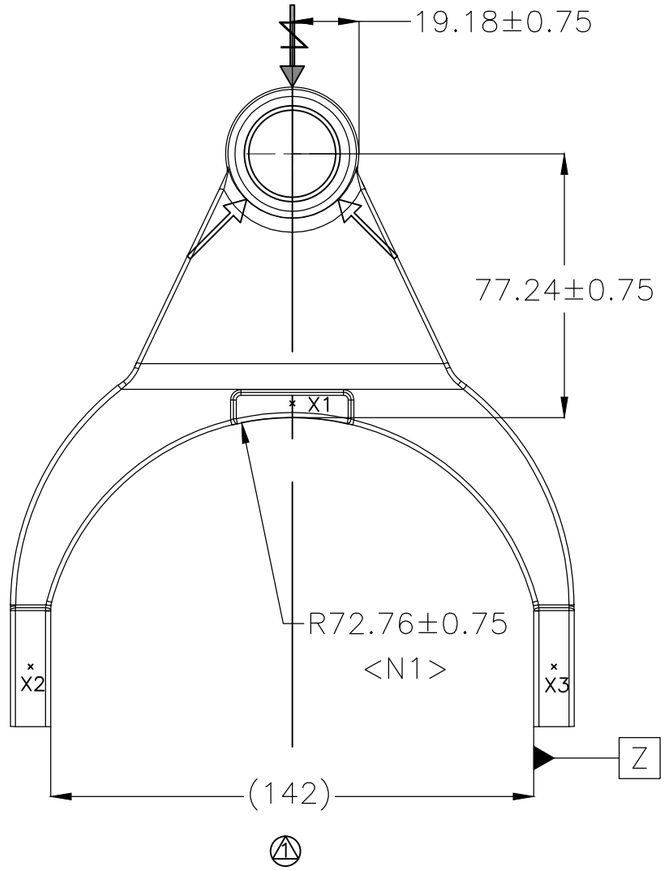

QUALITY CONTROL CHARACTERISTICS
DENOTES MAJOR CHARACTERISTIC

1. COLLAR OPENING
2. MACHINED BORE
3. MACHINE SURFACE FACE
4. PAD LOCATION
5. PAD WIDTH

Notes:

1.<N1> Machining Radius to be merged with casting radius

5	11.04.24	Tolerance Updated	NK
4	25.01.23	Tolerance added as per quality required	NK
3	06.01.23	Modified description as per PFD	NK
2	15.12.22	Added op 40 & 70	NK
1	07.11.22	* 12.75±0.5 added (OP-30),Note added (*1,*2)(OP80), Drawing updated (OP-50,OP-60),8.65±0.25 added (OP-30) Added Quality Control characters.(OP-10,OP-30,OP-80)	NK
0	27.04.22	New Casting Drawing without tong maching	NK

Revision Details

MADRAS ENGINEERING INDUSTRIES PVT LTD

Customer: MERITOR

Material: Refer Customer Dwg

Dwg.No./Rev.: 3296B1328 / N

DRAWN BY	NPJ	24.03.22
CHECKED BY	KSR	25.03.22
APPROVED BY	NK	26.03.22

Dimension are in mm Scale NTS

Part.No./Rev.: 3296B1328 / N

SHEET 01of 01

TITLE: OP20- HEAD MACHINING - VMC

FORK-SHIFT,FIN

Stage Dwg No.: 3296B1328 - 20