EXPORT_CONTROL: HARD_WARE=EAR - EAR99,EXPORT_CONTROL=EAR - EAR99 STATE: Engineering Released Revision: C.3

LAYOUT NO.	----------
SIM.PARTS	3235N2432

INTERPRET DRAWING PER ASME Y14.5-2018
ALL DIMENSIONS IN MILLIMETERS.
ALL OTHER TOLERANCES:
±0.40 ON 2-PLACE DECIMALS
±0.8 ON 1-PLACE DECIMALS
±1° ON ANGULAR DIMENSIONS

ALL MACHINED SURFACE FINISHES 8.3
ALL MACHINED INSIDE CORNERS 0.80 RADIUS.
BREAK ALL SHARP EDGES.
REMOVE ALL BURRS,FINS,FLASH & PROJECTIONS

A	RELEASED PART NUMBER 3235E3905	ECN-183279 15-OCT-21	DD ET
B	B1:MARKING PLACE WAS MOVED B2:NOTE WAS MODIFIED TO BE CLEARER B3:CHAMFER ANGLE WAS ADDED B4:ADDED DATUM D AS REFERENCE B5:ADDED DIMENSION 0.11 AS REF. B6:ADDED NOTE AND REMOVED BALOON B7:ADDED PERPENDICULARITY B8:FIXED SHAPE MISUNDERSTANDING ON OPT.CONSTRUCTION B9:ADDED TOLERANCE WRT TO DATUM"D" AND DATUM"D"REMOVAL FROM TOLERANCE ABOVE	ECN-184522 04-OCT-22	DD ET
C	C1:ADDED NOTES ABOUT IH;	ECN-199351 23-MAY-23	DD AV

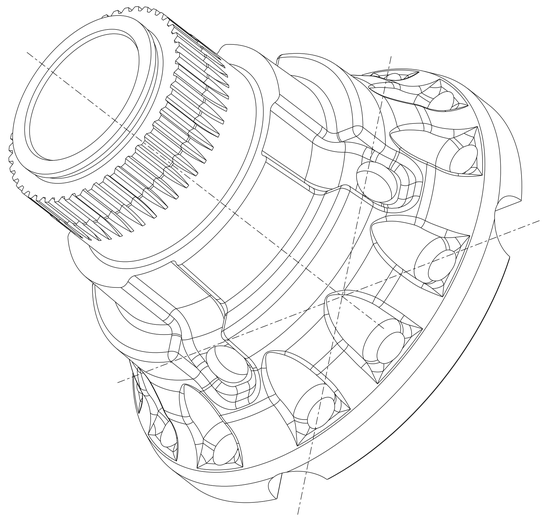

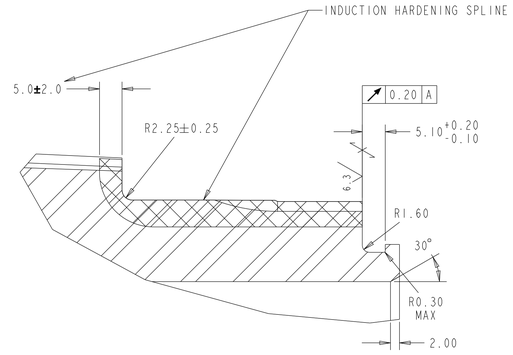

DETAIL A
SCALE 2.000
OPTIONAL CONSTRUCTION FOR PROCESS
A.O.SPEC. 468-B EXCEPT HRC 49-58

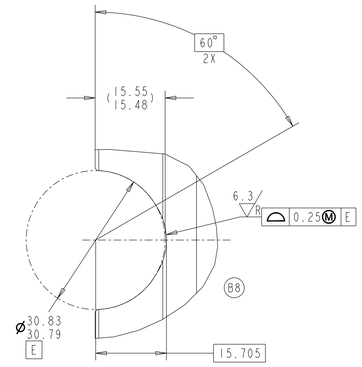

DETAIL B
SCALE 2.000
OPTIONAL MACHINING
(4 SLOTS)

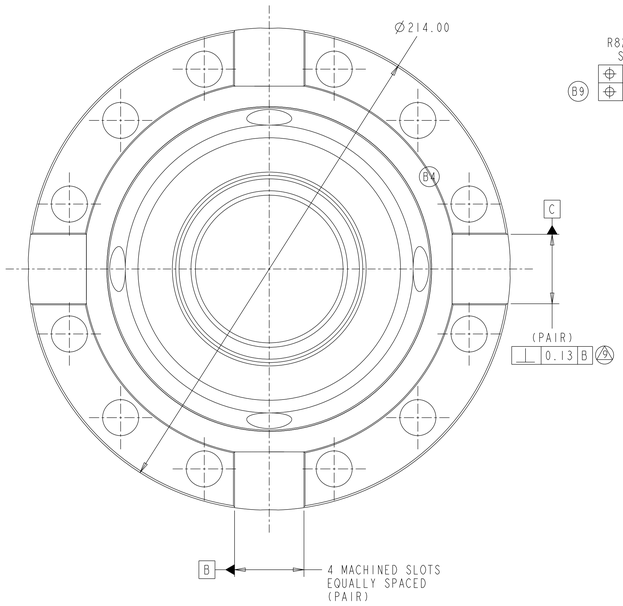

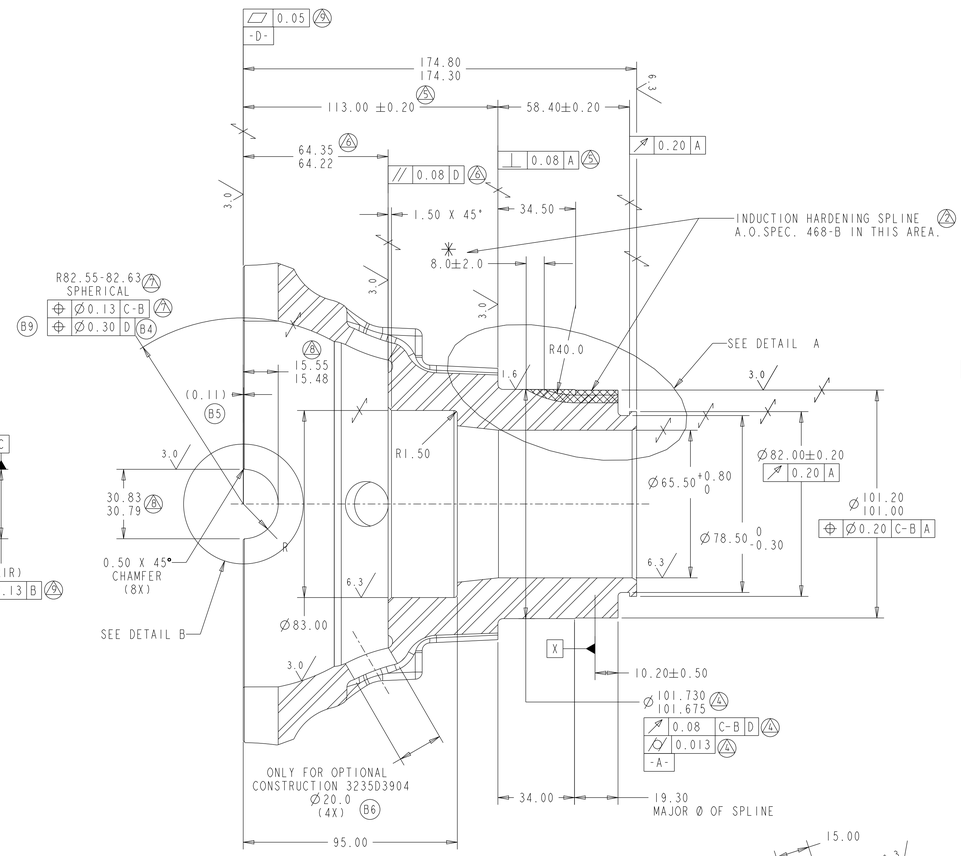

SECTION A-A

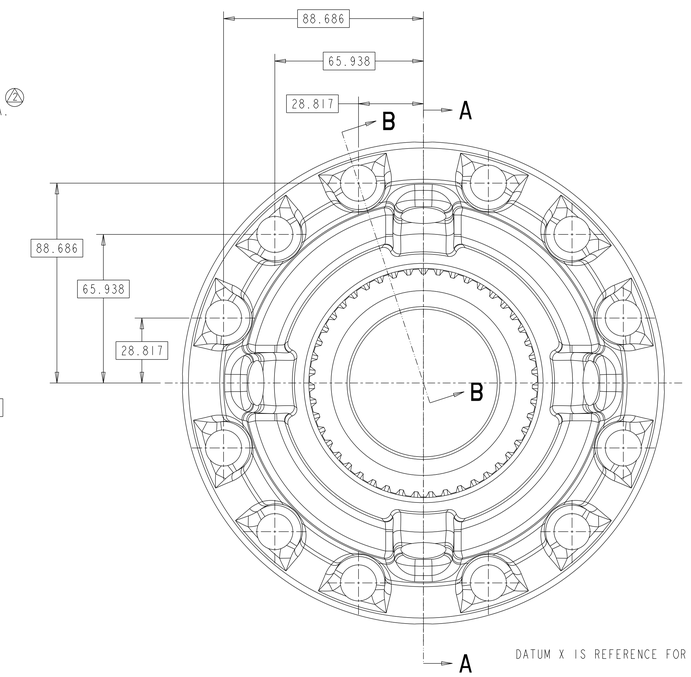

DATUM X IS REFERENCE FOR SPLINE MEASUREMENT ONLY B2

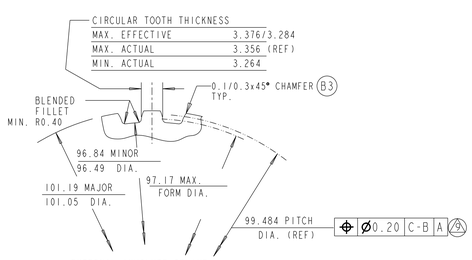

EXTERNAL INVOLUTE SPLINE	
FLAT ROOT	SIDE FIT
NUMBER OF TEETH	47
DIAMETRAL PITCH	12/24 (2.117/1.058)
PRESSURE ANGLE	30°00'
MEASUREMENT OVER TWO	
PINS 105.50/105.65	(REF)
PIN DIAMETER 4.00	FLAT NONE

C1

NOTES:

1-INDUCTION HARDENING PROFILE: HARDNESS OF 49-58HRC.

2-DARK GREY COLOR RESULTING FROM 722 INSPECTION IS ALLOWED IN HAZ TRANSITION AREA (-✳-), AS LONG AS NO GRINDING BURNS ARE PRESENT.

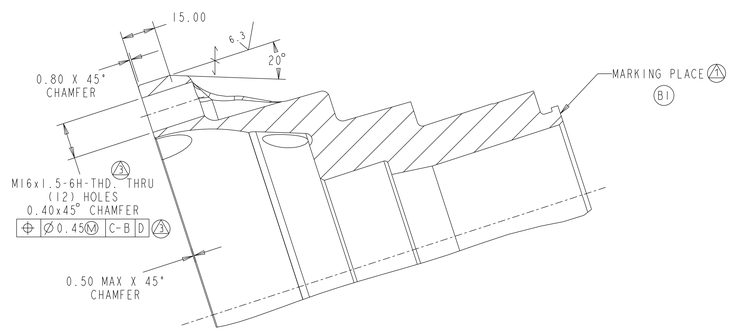

SECTION B-B

QUALITY CONTROL CHARACTERISTICS

- DENOTES MAJOR CHARACTERISTIC
- 1 IDENTIFICATIONS
- 2 PROCESS
- 3 THREAD AND GEOM.TOLERANCE
- 4 BRG DIA AND GEOM.TOLERANCE
- 5 BRG SHOULDER TO SPIDER CL DIM AND SQUARENESS
- 6 WASHER SEAT TO SPIDER CL DIM AND PARALLELISM
- 7 SPHERICAL RADIUS AND GEO.TOLERANCE
- 8 SPIDER HOLE DIM AND DEPTH B7
- 9 FLATNESS, SQUARENESS, POSITION AND PERPENDICULARITY
- 10 ROUGHNESS

3235D3904	ECN-183279	PART/DWG NO. 3235E3905	03104
MAKE FROM	RELEASE	NAME CASE-DIFF.FIN.	ENG.DESC. CODE

APPLY SPECIFIED MERITOR MARKINGS PER DRAFTING ENGINEERING STANDARDS D-004

THIS PRINT IS LOANED ON A CONFIDENTIAL BASIS SUBJECT TO RETURN UPON DEMAND BY MERITOR AND NOTHING HEREON MAY BE REPRODUCED, USED OR DISCLOSED IN WHOLE OR IN PART WITHOUT THE PRIOR WRITTEN PERMISSION OF MERITOR.

MATERIAL	D-25-6		
PROCESS	A.O.SPEC. 468-B		
PROJECT ENGINEER	D.DUSI	3RD ANGLE PROJECTION	DRAWING SIZE E
DRAWN BY	D.DUSI		MERITOR. METRIC
CHECKED BY	E.TIZIANI/A.VIZCAINO		
SCALE 1.000	DESIGN CONTROL GROUP AXLE REAR EU	CHANGE REQUEST # CR-140329	DRAWING 3235E3905 / MODEL 3235E3905 C.1 / SHEET 1 OF 1
WEIGHT RGH./FIN.	8.694 kg	ORIGINAL FOR MR/MS-150E	

1 2 3 4 IN. 10THS. 10 20 30 40 50 60 70 80 90 100MM

DO NOT CHANGE MANUALLY