LAYOUT NO.	- -
SIM.PARTS	- -

UNLESS OTHERWISE SPECIFIED

INTERPRET DRAWING PER ASME Y14.5M-1994
ALL DIMENSIONS IN INCHES.
ALL OTHER TOLERANCES:
±.015 ON 3-PLACE DECIMALS
±.03 ON 2-PLACE DECIMALS
±1° ON ANGULAR DIMENSIONS

ALL MACHINED SURFACE FINISHES 350
ALL MACHINED INSIDE CORNERS .030 RADIUS.
BREAK ALL SHARP EDGES.
REMOVE ALL BURRS,FINS,FLASH & PROJECTIONS
CASTING TOLERANCES PER STD ISO 8062-3.
FORGING TOLERANCES +.06 -.03; DRAFTS 7°±1°

REVISIONS

F	REVISED AND REDRAWN TO CREO WITH LATEST FORMAT ---------- 1) DIM WAS 2.380/2.390 MAJOR DIA 2) WAS FLAT ROOT 3) WAS DIAMETRAL PITCH	161436 26-JULY-19	NHD AF

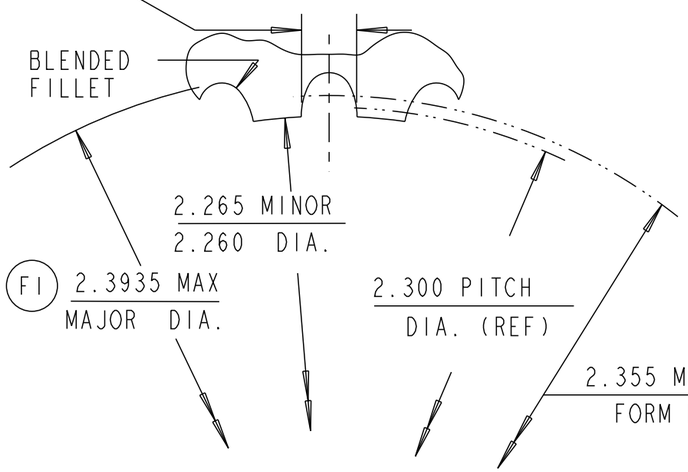

	CIRCULAR TOOTH SPACE WIDTH	
	MIN. EFFECTIVE	.0835
	MIN. ACTUAL	.0850 (REF)
	MAX. ACTUAL	.0864

	INTERNAL INVOLUTE SPLINE	
F2	FILLET ROOT	SIDE FIT
	NUMBER OF TEETH	46
F3	SPLINE PITCH	20/40
	PRESSURE ANGLE	37.5°
	MEASUREMENT BETWEEN TWO	
	PINS 2.1841/2.1822 (REF)	
	PIN DIAMETER .0864	FLAT

ALL GEOMETRY CHANGES MUST
BE INCORPORATED ON SOLID MODEL

ER8139206	3-63014	00050
13193	PART/DWG NO. C413	00050
RELEASE	NAME LAYOUT, 2 3/8-46 SPLINE	ENG. DESC. CODE

APPLY SPECIFIED MERITOR MARKINGS PER DRAFTING ENGINEERING STANDARDS D-004

THIS PRINT IS LOANED ON A CONFIDENTIAL BASIS SUBJECT TO RETURN UPON DEMAND BY MERITOR AND NOTHING HEREON MAY BE REPRODUCED, USED OR DISCLOSED IN WHOLE OR IN PART WITHOUT THE PRIOR WRITTEN PERMISSION OF MERITOR.

MATERIAL	---		
PROCESS	---		
PROJECT ENGINEER	ALEX	3RD ANGLE PROJECTION	
DRAWN/REDRAWN BY	G.K / NIKETHAN		
CHECKED/ RECHECKED BY	G.K / ALEX F		
DRAWING SIZE	B	MERITOR	INCH
WEIGHT RGH/FIN	- LBS	ORIGINAL FOR -	
SCALE	1:1	DESIGN CONTROL GROUP	DRIVELINE-TROY
CHANGE REQUEST #		DRAWING	C413 F.3
MODEL	C413 F.3	SHEET	1 OF 1

IN.-10THS. 1 2 3 — 10 20 30 40 50 60 70 80 MM

DO NOT CHANGE MANUALLY