APPENDIX S

12,341,147

Secondary Battery And Method For Manufacturing The Same

Transaction History

Date	Transaction Description
03-27-2024	PTO-SB-69-Authorize EPO Access to Search Results
03-27-2024	Applicants have given acceptable permission for participating foreign
03-27-2024	Entity Status Set To Undiscounted (Initial Default Setting or Status Change)
03-27-2024	Initial Exam Team nn
04-09-2024	Sent to Classification Contractor
04-09-2024	FITF set to YES - revise initial setting
04-09-2024	Patent Term Adjustment - Ready for Examination
04-10-2024	Application Dispatched from OIPE
04-10-2024	Email Notification
04-10-2024	Mail Pre-Exam Notice
04-10-2024	Application Is Now Complete
04-10-2024	Filing Receipt
04-15-2024	Information Disclosure Statement (IDS) Filed
04-15-2024	Information Disclosure Statement (IDS) Filed
04-30-2024	Case Docketed to Examiner in GAU
05-03-2024	Application ready for PDX access by participating foreign offices
05-03-2024	Application ready for PDX access by participating foreign offices
07-18-2024	Email Notification
07-18-2024	PG-Pub Issue Notification
09-28-2024	Case Docketed to Examiner in GAU
10-03-2024	Information Disclosure Statement (IDS) Filed
10-03-2024	Information Disclosure Statement (IDS) Filed
10-08-2024	Information Disclosure Statement considered
10-08-2024	Information Disclosure Statement considered
10-10-2024	Non-Final Rejection
10-16-2024	Electronic Review
10-16-2024	Email Notification
10-16-2024	Mail Non-Final Rejection
10-24-2024	Email Notification
10-24-2024	Filing Receipt - Corrected
11-14-2024	Information Disclosure Statement (IDS) Filed
01-13-2025	Response after Non-Final Action
01-13-2025	PARALEGAL OR ELECTRONIC TERMINAL DISCLAIMER APPROVED
01-13-2025	Terminal Disclaimer Filed
01-16-2025	Date Forwarded to Examiner
02-06-2025	Information Disclosure Statement considered
02-20-2025	Notice of Allowance Data Verification Completed
02-24-2025	Mail Notice of Allowance
05-22-2025	Issue Fee Payment Verified
05-22-2025	Issue Fee Payment Received
05-27-2025	Dispatch to FDC
05-27-2025	Application Is Considered Ready for Issue
06-11-2025	Issue Notification Mailed
06-12-2025	Email Notification
06-24-2025	Email Notification
06-24-2025	Mail Patent eGrant Notification
06-24-2025	Patent eGrant Notification
06-24-2025	Recordation of Patent eGrant
06-24-2025	Patent Issue Date Used in PTA Calculation
07-01-2025	Recordation of Patent Grant Mailed

Issue Classification	Application/Control No.	Applicant(s)/Patent Under Reexamination
	18/618,609	Kim et al.
	Examiner	**Art Unit**
	ALIX E EGGERDING	RD00

CPC						
Symbol					**Type**	**Version**
H01M	/	10	/	0422	F	2013-01-01
H01M	/	10	/	0431	I	2013-01-01
H01M	/	50	/	538	I	2021-01-01
H01M	/	50	/	536	A	2021-01-01

CPC Combination Sets								
Symbol					**Type**	**Set**	**Ranking**	**Version**
	/		/					

NONE (Assistant Examiner) (Date)		**Total Claims Allowed:** 15	
/ALIX E EGGERDING/ Primary Examiner, RD00 (Primary Examiner) (Date)	06 February 2025	O.G. Print Claim(s) 1	O.G. Print Figure 4

U.S. Patent and Trademark Office Part of Paper No.: 20250206

Issue Classification	Application/Control No.	Applicant(s)/Patent Under Reexamination
	18/618,609	Kim et al.
	Examiner	**Art Unit**
	ALIX E EGGERDING	RD00

INTERNATIONAL CLASSIFICATION				
CLAIMED				
H01M	/	10	/	04

NON-CLAIMED				
	/		/	

US ORIGINAL CLASSIFICATION	
CLASS	**SUBCLASS**
429	97

CROSS REFERENCES(S)						
CLASS	**SUBCLASS (ONE SUBCLASS PER BLOCK)**					

NONE (Assistant Examiner)	(Date)	**Total Claims Allowed:** 15	
/ALIX E EGGERDING/ Primary Examiner, RD00 (Primary Examiner)	06 February 2025 (Date)	O.G. Print Claim(s) 1	O.G. Print Figure 4

U.S. Patent and Trademark Office

Part of Paper No.: 20250206

Issue Classification	Application/Control No.	Applicant(s)/Patent Under Reexamination
	18/618,609	Kim et al.
	Examiner	**Art Unit**
	ALIX E EGGERDING	RD00

☑ Claims renumbered in the same order as presented by applicant ☐ CPA ☑ T.D. ☐ R.1.47

CLAIMS

Final	Original	Final	Original	Final	Original	Final	Original	Final	Original	Final	Original	Final	Original	Final	Original
1	1	10	10												
2	2	11	11												
3	3	12	12												
4	4	13	13												
5	5	14	14												
6	6	15	15												
7	7														
8	8														
9	9														

NONE (Assistant Examiner)	(Date)	**Total Claims Allowed:** 15	
/ALIX E EGGERDING/ Primary Examiner, RD00 (Primary Examiner)	06 February 2025 (Date)	O.G. Print Claim(s) 1	O.G. Print Figure 4

U.S. Patent and Trademark Office

Part of Paper No.: 20250206

Search Notes	Application/Control No.	Applicant(s)/Patent Under Reexamination
	18/618,609	Kim et al.
	Examiner	**Art Unit**
	ALIX E EGGERDING	RD00

CPC - Searched*		
Symbol	**Date**	**Examiner**

CPC Combination Sets - Searched*		
Symbol	**Date**	**Examiner**

US Classification - Searched*			
Class	**Subclass**	**Date**	**Examiner**

* See search history printout included with this form or the SEARCH NOTES box below to determine the scope of the search.

Search Notes		
Search Notes	**Date**	**Examiner**
Updated search in parent application 16/498,751	10/08/2024	AE

Interference Search			
US Class/CPC Symbol	**US Subclass/CPC Group**	**Date**	**Examiner**

/ALIX E EGGERDING/ Primary Examiner, RD00	

Search Notes	Application/Control No.	Applicant(s)/Patent Under Reexamination
	18/618,609	Kim et al.
	Examiner	**Art Unit**
	ALIX E EGGERDING	RD00

CPC - Searched*		
Symbol	**Date**	**Examiner**

CPC Combination Sets - Searched*		
Symbol	**Date**	**Examiner**

US Classification - Searched*			
Class	**Subclass**	**Date**	**Examiner**

* See search history printout included with this form or the SEARCH NOTES box below to determine the scope of the search.

Search Notes		
Search Notes	**Date**	**Examiner**
Updated search in parent application 16/498,751	10/08/2024	AE
Updated above	02/06/2025	AE

Interference Search			
US Class/CPC Symbol	**US Subclass/CPC Group**	**Date**	**Examiner**
H01M	50/all, 10/all	02/06/2025	AE

/ALIX E EGGERDING/ Primary Examiner, RD00	

PE2E SEARCH - Search History (Prior Art)

Ref #	Hits	Search Query	DBs	Default Operator	Plurals	British Equivalents	Time Stamp
L2	14	("20010023038"|"20050003264"|"20150295270"|"20110067227"|"20120009450"|"20160351966"|"20110293977"|"20100310926"|"6569565"|"20070196730"|"20050287428"|"20130344364"|"20190379028"|"20120208055").PN.	(US-PGPUB; USPAT)	OR	ON	ON	2021/05/17 02:34 PM
L3	9	("20150037638"|"20110067227"|"20140147714"|"20120009450"|"20110081574"|"20160351940"|"20100190056"|"20160218343"|"20130252054").PN.	(US-PGPUB; USPAT)	OR	ON	ON	2021/05/17 02:41 PM
L4	1	"20100310926".pn.	(US-PGPUB; USPAT)	OR	ON	ON	2021/05/17 02:46 PM
L5	21124	(h01m10/$.cpc. h01m50/$.cpc.) and (kim-j$.inv. kim-h$.inv. kim-s$.inv.)	(US-PGPUB; USPAT; FPRS; EPO; JPO; DERWENT)	OR	ON	ON	2021/05/17 02:56 PM
L6	260	(h01m10/$.cpc. h01m50/$.cpc. h01m10/$.ipc. h01m50/$.ipc.) and (kim-j$.inv. kim-h$.inv. kim-s$.inv.) and (electrode cathode anode) with (tab notch) near4 (overlap$4 plural$4)	(US-PGPUB; USPAT; FPRS; EPO; JPO; DERWENT)	OR	ON	ON	2021/05/17 02:57 PM
L7	144	(h01m10/$.cpc. h01m50/$.cpc. h01m10/$.ipc. h01m50/$.ipc.) and (electrode cathode anode) with (tab notch) near4 (overlap$4 plural$4) and (battery mea electrode near3 assembly) with (wound jelly near3 roll cylindrical)	(FPRS; EPO; JPO; DERWENT)	OR	ON	ON	2021/05/17 04:11 PM
L8	132	L7 not L6	(FPRS; EPO; JPO; DERWENT)	OR	ON	ON	2021/05/17 04:12 PM
L9	8	("20050277019"|"20090169990"|"20090317707"|"20030235736"|"2006	(US-PGPUB; USPAT)	OR	ON	ON	2021/05/17 04:15 PM

		0147793"|"20020192548"|"20060110658"|"20070154797").PN.					
L10	0	("2016/0351966").URPN.	(USPAT)	OR	ON	ON	2021/05/17 04:31 PM
L11	1	(15/115220).APP.	(USPAT; USOCR)	OR	ON	ON	2021/05/17 04:31 PM
L12	10	("20050287428" | "20060024572" | "20070196730" | "20120251854" | "20120328924" | "20130216879" | "20140045041" | "7364817" | "7700222" | "7955736").PN. OR ("10381688").URPN.	(US-PGPUB; USPAT; USOCR)	OR	ON	ON	2021/05/17 04:31 PM
L13	6	("2007/0196730").URPN.	(USPAT)	OR	ON	ON	2021/05/17 04:33 PM
L14	10	("3490949" | "4053687" | "6376121" | "6596434" | "6818025" | "7332246" | "7364817").PN. OR ("7700222").URPN.	(US-PGPUB; USPAT; USOCR)	OR	ON	ON	2021/05/17 04:33 PM
L15	14	("20020164524" | "20030118912" | "20050225926" | "5736270" | "6071638" | "6222720" | "6328769" | "7364817" | "7618742" | "7670715" | "7678501" | "7700222").PN. OR ("8310809").URPN.	(US-PGPUB; USPAT; USOCR)	OR	ON	ON	2021/05/17 04:34 PM
L16	11	("20020191370" | "20030086239" | "20060024572" | "20060240322" | "20060240323" | "3237274" | "5849431" | "6456484" | "6896993" | "8310809").PN. OR ("8628877").URPN.	(US-PGPUB; USPAT; USOCR)	OR	ON	ON	2021/05/17 04:35 PM
L17	13	("3761314" | "5525441" | "5635312" | "5736270").PN. OR ("6328769").URPN.	(US-PGPUB; USPAT; USOCR)	OR	ON	ON	2021/05/18 10:22 AM
L18	44	("3761314").URPN.	(USPAT)	OR	ON	ON	2021/05/18 10:23 AM
L19	5	("20050142436" | "3761314").PN. OR ("7955736").URPN.	(US-PGPUB; USPAT; USOCR)	OR	ON	ON	2021/05/18 10:24 AM
L20	3	("2005/0142436").URPN.	(USPAT)	OR	ON	ON	2021/05/18 10:34 AM
L21	1863	h01m50/538.cpc.	(US-PGPUB; USPAT)	OR	ON	ON	2021/05/18

							11:26 AM
L22	4637	(h01m50/538.cpc. h01m10/0422.cpc. h01m50/531.cpc.)	(US-PGPUB; USPAT)	OR	ON	ON	2021/05/18 01:20 PM
L23	66	(h01m50/538.cpc. h01m10/0422.cpc. h01m50/531.cpc.) and (uncoated (free no remov$4 without) near3 active near3 material) with (plural$4 several) near4 (tab notch lead terminal)	(US-PGPUB; USPAT)	OR	ON	ON	2021/05/18 01:43 PM
L24	40	("20010038945" | "20030091893" | "20030175587" | "20030194601" | "20030211388" | "20040023108" | "20040121230" | "20040157115" | "20040157120" | "20040214076" | "20040237290" | "20040265683" | "20050255378" | "20060124973" | "20060172190" | "20070117011" | "20090109099" | "4400415" | "4966822" | "5464705" | "5554459" | "5773164" | "5834133" | "5866274" | "5876237" | "6080506" | "6159253" | "6197074" | "6344292" | "6432574" | "6521374" | "6673128" | "6780303" | "6875540" | "6884541" | "7033697" | "RE38518").PN. OR ("7927732").URPN.	(US-PGPUB; USPAT; USOCR)	OR	ON	ON	2021/05/18 02:24 PM
L25	49	("20010038945" | "20030035993" | "20030091893" | "20030175587" | "20030194601" | "20030211388" | "20040023108" | "20040121230" | "20040157115" | "20040157120" | "20040214076" | "20040237290" | "20040265683" | "20050255378" |	(US-PGPUB; USPAT; USOCR)	OR	ON	ON	2021/05/18 02:29 PM

		"20060124973" | "20060172190" | "20060210857" | "20070117011" | "20090109099" | "3823040" | "4049888" | "4383013" | "4400415" | "4966822" | "5464705" | "5554459" | "5773164" | "5834133" | "5866274" | "5876237" | "6071638" | "6080506" | "6083639" | "6159253" | "6197074" | "6344292" | "6432574" | "6521374" | "6673128" | "6780303" | "6875540" | "6884541" | "7033697" | "7927732" | "8084158" | "RE38518").PN. OR ("8236441").URPN.					
L26	1	"20090029240".pn.	(US-PGPUB; USPAT; USOCR)	OR	ON	ON	2021/05/18 02:29 PM
L27	9	("2009/0029240").URPN.	(USPAT)	OR	ON	ON	2021/05/18 02:30 PM
L28	1	"20130108903".pn.	(US-PGPUB; USPAT)	OR	ON	ON	2021/05/18 02:31 PM
L29	100	("4053687" | "4237199" | "4283843" | "4539273" | "5631102").PN. OR ("5849431").URPN.	(US-PGPUB; USPAT; USOCR)	OR	ON	ON	2021/05/18 02:37 PM
L30	1	"20200295341".pn.	(US-PGPUB; USPAT; USOCR)	OR	ON	ON	2021/05/18 03:13 PM
L32	38	(h01m50/$.cpc. h01m10/$.cpc. h01m50/$.ipc. h01m10/$.ipc.) and (uncoated (free no remov$4 without) near3 active near3 material) same (plural$4 several) near4 (tab notch lead terminal)	(FPRS; EPO; JPO; DERWENT)	OR	ON	ON	2021/05/27 11:35 AM
L36	3	(h01m50/$.cpc. h01m10/$.cpc. h01m50/$.ipc. h01m10/$.ipc.) and (uncoated (free no remov$4 without) near3 active near3 material) same (plural$4 several) near4 (tab notch lead) and electrode with terminal	(FPRS; EPO; JPO; DERWENT)	OR	ON	ON	2021/05/27 03:37 PM
L37	66	(h01m50/538.cpc. h01m10/0422.cpc.	(US-PGPUB; USPAT)	OR	ON	ON	2021/05/27 03:40 PM

		h01m50/531.cpc.) and (uncoated (free no remov$4 without) near3 active near3 material) same (plural$4 several) near4 (tab notch lead) and electrode with terminal					
L38	0	(h01m50/538.cpc. h01m10/0422.cpc. h01m50/531.cpc.) and (uncoated (free no remov$4 without) near3 active near3 material) same (plural$4 several) near4 (tab notch lead) and (electrode anode cathode positive negative) with terminal not L37	(US-PGPUB; USPAT)	OR	ON	ON	2021/05/27 04:00 PM
L39	26	(h01m50/$.cpc.) and (uncoated (free no remov$4 without) near3 active near3 material) same (plural$4 several) near4 (tab notch lead) and electrode with terminal not L37	(US-PGPUB; USPAT)	OR	ON	ON	2021/05/27 04:00 PM
L40	27	(h01m50/$.cpc.) and (uncoated (free no remov$4 without) near3 active near3 material) same (plural$4 several) near4 (tab notch lead) and (electrode anode cathode positive negative) with terminal not L37	(US-PGPUB; USPAT)	OR	ON	ON	2021/05/27 04:04 PM
L41	4	(h01m50/$.cpc.) and (uncoated (free no remov$4 without) near3 active near3 material) same (plural$4 several) near4 (tab notch lead) same (terminal lead tab connect$4) near3 (attach$4 add$4 fix$4 secur$4 append$4 join$4 fasten$4) not L37 not L40	(US-PGPUB; USPAT)	OR	ON	ON	2021/05/27 04:15 PM
L42	8	"20050287428".pn. "20090148766".pn. "20090297941".pn. "20110076547".pn. "20110076547".pn. "20160197379".pn.	(US-PGPUB; USPAT)	OR	ON	ON	2021/05/27 04:18 PM

		"7923139".pn. "7955736".pn. "8450006".pn.					
L43	26	(h01m50/$.cpc.) and (uncoated (free no remov$4 without) near3 active near3 material) near4 (edge top length) same (terminal lead tab connect$4) near3 (attach$4 add$4 fix$4 secur$4 append$4 join$4 fasten$4) not L37 not L40	(US-PGPUB; USPAT)	OR	ON	ON	2021/05/27 04:20 PM
L44	1	(15/573571).APP.	(US-PGPUB; USOCR)	OR	ON	ON	2021/05/27 04:35 PM
L45	2	("20130316209" | "20150050535").PN. OR ("10566598").URPN.	(US-PGPUB; USPAT; USOCR)	OR	ON	ON	2021/05/27 04:35 PM
L46	1	(13/984779).APP.	(USPAT; USOCR)	OR	ON	ON	2021/05/27 04:38 PM
L47	15	("20060240319" | "20070269711" | "20080241646" | "20090136835" | "20100124694" | "20100129719" | "20100310910" | "6019802" | "6465134" | "6589694" | "7261792" | "7642015" | "7935445" | "9577231" | "9655393").PN. OR ("10658633").URPN.	(US-PGPUB; USPAT; USOCR)	OR	ON	ON	2021/05/27 04:38 PM
L48	66	(h01m50/538.cpc. h01m10/0422.cpc. h01m50/531.cpc.) and (uncoated (free no remov$4 without) near3 active near3 material) same (plural$4 several) near4 (tab notch lead) and electrode with terminal	(US-PGPUB; USPAT)	OR	ON	ON	2021/05/28 09:49 AM
L49	27	(h01m50/$.cpc.) and (uncoated (free no remov$4 without) near3 active near3 material) same (plural$4 several) near4 (tab notch lead) and (electrode anode cathode positive negative) with terminal not L48	(US-PGPUB; USPAT)	OR	ON	ON	2021/05/28 09:49 AM

L50	26	(h01m50/$.cpc.) and (uncoated (free no remov$4 without) near3 active near3 material) near4 (edge top length) same (terminal lead tab connect$4) near3 (attach$4 add$4 fix$4 secur$4 append$4 join$4 fasten$4) not L48 not L49	(US-PGPUB; USPAT)	OR	ON	ON	2021/05/28 09:49 AM
L51	140	(h01m50/$.cpc.) and (uncoated (free no remov$4 without)) near4 (edge top length) same (terminal lead tab connect$4) near3 (attach$4 add$4 fix$4 secur$4 append$4 join$4 fasten$4) not L48 not L49 not L50	(US-PGPUB; USPAT)	OR	ON	ON	2021/05/28 09:49 AM
L52	21	(h01m50/$.cpc.) and (uncoated (free no remov$4 without)) near4 (edge top length) same (terminal lead tab connect$4) near3 (attach$4 add$4 fix$4 secur$4 append$4 join$4 fasten$4) not L48 not L49 not L50 and (wind$4 wound jelly$2roll) near4 (cell battery unit)	(US-PGPUB; USPAT)	OR	ON	ON	2021/05/28 09:59 AM
L53	274	(h01m50/$.cpc.) and (uncoated (free no remov$4 without)) near4 (edge top length) same (terminal lead tab connect$4) not L48 not L49 not L50 and (wind$4 wound jelly$2roll) near4 (cell battery unit) not L52	(US-PGPUB; USPAT)	OR	ON	ON	2021/05/28 10:19 AM
L54	74	(h01m50/$.cpc.) and (uncoated (free no remov$4 without)) near4 (edge top length) same (terminal lead tab connect$4) near4 (side end) not L48 not L49 not L50 and (wind$4 wound jelly$2roll) near4 (cell battery unit) not L52	(US-PGPUB; USPAT)	OR	ON	ON	2021/05/28 10:22 AM
L55	2	(h01m50/$.cpc.) and	(US-PGPUB; USPAT)	OR	ON	ON	2021/05/28

		(mea membrane near3 electrode near3 assembly) with (terminal lead tab connect$4) near4 (side end) not L48 not L49 not L50 and (wind$4 wound jelly$2roll) near4 (cell battery unit) not L52 not L54					10:40 AM
L56	1	"20130108903".pn.	(US-PGPUB; USPAT)	OR	ON	ON	2021/05/28 02:56 PM
L57	4	"20070196730".pn. "20100081052".pn. "20090029240".pn. "20110067227".pn.	(US-PGPUB; USPAT)	OR	ON	ON	2021/05/28 03:04 PM
L58	0	"20100081052".pn. and second near3 embodiment with (roll$4 coil$4)	(US-PGPUB; USPAT)	OR	ON	ON	2021/05/28 03:07 PM
L59	0	"20100081052".pn. and second near3 embodiment same2 (roll$4 coil$4)	(US-PGPUB; USPAT)	OR	ON	ON	2021/05/28 03:08 PM
L60	1	"20180145304".pn.	(US-PGPUB; USPAT)	OR	ON	ON	2021/05/28 05:13 PM
L61	2	"20100081052".pn. "20130108903".pn.	(US-PGPUB; USPAT)	OR	ON	ON	2021/09/17 03:17 PM
L62	68	(h01m50/538.cpc. h01m10/0422.cpc. h01m50/531.cpc.) and (uncoated (free no remov$4 without) near3 active near3 material) same (plural$4 several) near4 (tab notch lead) and electrode with terminal	(US-PGPUB; USPAT)	OR	ON	ON	2021/09/17 03:41 PM
L63	28	(h01m50/$.cpc.) and (uncoated (free no remov$4 without) near3 active near3 material) same (plural$4 several) near4 (tab notch lead) and (electrode anode cathode positive negative) with terminal not L62	(US-PGPUB; USPAT)	OR	ON	ON	2021/09/17 03:41 PM
L64	26	(h01m50/$.cpc.) and (uncoated (free no remov$4 without) near3 active near3 material) near4 (edge top length) same (terminal lead tab connect$4) near3	(US-PGPUB; USPAT)	OR	ON	ON	2021/09/17 03:41 PM

		(attach$4 add$4 fix$4 secur$4 append$4 join$4 fasten$4) not L62 not L63					
L65	22	(h01m50/$.cpc.) and (uncoated (free no remov$4 without)) near4 (edge top length) same (terminal lead tab connect$4) near3 (attach$4 add$4 fix$4 secur$4 append$4 join$4 fasten$4) not L62 not L63 not L64 and (wind$4 wound jelly$2roll) near4 (cell battery unit)	(US-PGPUB; USPAT)	OR	ON	ON	2021/09/17 03:41 PM
L66	77	(h01m50/$.cpc. h01m50/$.ipc.) and (uncoated (free no remov$4 without)) near4 (edge top length) same (terminal lead tab connect$4) near4 (side end) not L62 not L63 not L64 and (wind$4 wound jelly$2roll) near4 (cell battery unit) not L65	(US-PGPUB; USPAT; FPRS; EPO; JPO; DERWENT)	OR	ON	ON	2021/09/17 03:41 PM
L67	1	"20110067227".pn.	(US-PGPUB; USPAT)	OR	ON	ON	2021/09/17 03:50 PM
L68	68	(h01m50/538.cpc. h01m10/0422.cpc. h01m50/531.cpc.) and (uncoated (free no remov$4 without) near3 active near3 material) same (plural$4 several) near4 (tab notch lead) and electrode with terminal	(US-PGPUB; USPAT)	OR	ON	ON	2021/09/17 03:58 PM
L69	40	(h01m50/$.cpc. h01m$.ipc.) and (uncoated (free no remov$4 without) near3 active near3 material) same (plural$4 several) near4 (tab notch lead) and electrode with terminal not L68	(US-PGPUB; USPAT; FPRS; EPO; JPO; DERWENT)	OR	ON	ON	2021/09/17 03:58 PM
L70	3	"20100081052".pn. "20130108903".pn. "20180145304".pn.	(US-PGPUB; USPAT)	OR	ON	ON	2022/01/18 12:49 PM
L71	1	"20200295341".pn.	(US-PGPUB; USPAT)	OR	ON	ON	2022/02/08 09:51 AM

L72	59	("20010038945" | "20030035993" | "20030091893" | "20030175587" | "20030194601" | "20030211388" | "20040023108" | "20040121230" | "20040157115" | "20040157120" | "20040214076" | "20040237290" | "20040265683" | "20050255378" | "20060124973" | "20060172190" | "20060210857" | "20070117011" | "20090109099" | "3823040" | "4049888" | "4383013" | "4400415" | "4966822" | "5464705" | "5554459" | "5773164" | "5834133" | "5866274" | "5876237" | "6071638" | "6080506" | "6083639" | "6159253" | "6197074" | "6344292" | "6432574" | "6521374" | "6673128" | "6780303" | "6875540" | "6884541" | "7033697" | "7927732" | "8084158" | "RE38518").PN. OR ("8236441").URPN.	(US-PGPUB; USPAT; USOCR)	OR	ON	ON	2022/02/08 09:56 AM
L73	1	"20130252054".pn.	(US-PGPUB; USPAT)	OR	ON	ON	2022/03/03 10:11 AM
L74	28	(h01m50/$.cpc. h01m50/$.ipc.) and insulat$4 near4 (member plate collar) near4 (end top bottom) with (electrode negative positive cathode anode) near4 (tab lead) and cell with (wind$4 wound$4 roll$4 jelly near4 roll$4)	(US-PGPUB; USPAT; FPRS; EPO; JPO; DERWENT)	OR	ON	ON	2022/03/03 11:30 AM
L75	96	(h01m50/$.cpc. h01m50/$.ipc.) and insulat$4 near4 (member plate collar) with (electrode negative positive cathode anode) near4 (tab lead) with (cell unit mea membrane near3 assembly) and cell with	(US-PGPUB; USPAT; FPRS; EPO; JPO; DERWENT)	OR	ON	ON	2022/03/03 11:33 AM

		(wind$4 wound$4 roll$4 jelly near4 roll$4) not L74					
L76	19	("4271241" | "4822377").PN. OR ("5171647").URPN.	(US-PGPUB; USPAT; USOCR)	OR	ON	ON	2022/03/03 11:40 AM
L77	42	(h01m50/$.cpc. h01m50/$.ipc.) and insulat$4 near4 (member plate collar pad slab disc layer sheet panel) with (electrode negative positive cathode anode) near4 (tab lead) with (cell unit mea membrane near3 assembly) and cell with (wind$4 wound$4 roll$4 jelly near4 roll$4) not L74 not L75	(US-PGPUB; USPAT; FPRS; EPO; JPO; DERWENT)	OR	ON	ON	2022/03/03 11:43 AM
L78	32	("3262819" | "3415690" | "3861960" | "3986083" | "3994749" | "4271241" | "4523376").PN. OR ("4822377").URPN.	(US-PGPUB; USPAT; USOCR)	OR	ON	ON	2022/03/03 11:48 AM
L79	3	"4822377".pn. "20110067227".pn. "20130252054".pn.	(US-PGPUB; USPAT)	OR	ON	ON	2022/03/03 11:55 AM
L80	1	(13/861455).APP.	(USPAT; USOCR)	OR	ON	ON	2022/03/03 01:21 PM
L81	11	("20020192548" | "20030235736" | "20050277019" | "20060110658" | "20060147793" | "20070154797" | "20090169990" | "20090317707" | "20100124694" | "5580679" | "5662566").PN. OR ("9300004").URPN.	(US-PGPUB; USPAT; USOCR)	OR	ON	ON	2022/03/03 01:21 PM
L82	11	("20020192548" | "20030235736" | "20050277019" | "20060110658" | "20060147793" | "20070154797" | "20090169990" | "20090317707" | "20100124694" | "5580679" | "5662566").PN. OR ("9300004").URPN.	(US-PGPUB; USPAT; USOCR)	OR	ON	ON	2022/03/03 01:22 PM

L83	3	("2013/0252054").URPN.	(USPAT)	OR	ON	ON	2022/03/03 01:22 PM
L84	17	("20040029008" | "20060123609" | "20060194108" | "20090239133" | "20100124694" | "20100281685" | "20130252054" | "5250784" | "6337758" | "6534952" | "6746796" | "6967828" | "6995971" | "7875087" | "8974955").PN. OR ("9373865").URPN.	(US-PGPUB; USPAT; USOCR)	OR	ON	ON	2022/03/03 01:23 PM
L85	3	"4822377".pn. "20130108903".pn. "20130252054".pn.	(US-PGPUB; USPAT)	OR	ON	ON	2022/03/03 01:25 PM
L86	3	"4822377".pn. "20110067227".pn. "20130108903".pn.	(US-PGPUB; USPAT)	OR	ON	ON	2022/03/03 01:25 PM
L87	1	"20110067227".pn. and tab near3 group with (plural$4 number additional)	(US-PGPUB; USPAT)	OR	ON	ON	2022/03/03 01:33 PM
L88	1	"20130108903".pn. and electrode near3 tab with (across plural$4)	(US-PGPUB; USPAT)	OR	ON	ON	2022/03/03 01:37 PM
L89	1	"20200295341".pn. and outer near4 portion with end with electrode	(US-PGPUB; USPAT)	OR	ON	ON	2022/03/03 01:41 PM
L90	1	"20130252054".pn. and number near4 (tab winding "602" "604")	(US-PGPUB; USPAT)	OR	ON	ON	2022/03/03 01:47 PM
L91	3	"20110067227".pn. "20130252054".pn. "4822377".pn.	(US-PGPUB; USPAT)	OR	ON	ON	2022/08/25 04:44 PM
L92	48	((US-20130108903-A1 OR US-20150072204-A1 OR US-20180026295-A1 OR US-20100081052-A1 OR US-20070117011-A1 OR US-20030211388-A1 OR US-20010038945-A1 OR US-20090029240-A1 OR US-20200343520-A1 OR US-20110151295-A1 OR US-20210005936-A1 OR US-20180145304-A1 OR US-20080026293-A1 OR US-20100124694-	(US-PGPUB; USPAT; USOCR; FIT (AU, AP, AT, BE, BG, BR, BY, CA, CH, CN, CS, CU, CZ, DD, DE, DK, EA, EE, EP, ES, FI, FR, GB, HR, HU, ID, IE, IL, IS, IT, JP, KR, LT, LU, LV, MA, OA, RU, SU, WO, MC, MD, MY, NL, NO, NZ, PH, PL, PT, RO, RS, SE, SG, SI, SK, TH, TN, TR, TW, UA, VN); FPRS; EPO; JPO; DERWENT; IBM_TDB)	OR	ON	ON	2022/08/25 04:45 PM

		A1 OR US-20160351966-A1 OR US-20110067227-A1 OR US-20070196730-A1 OR US-20010023038-A1 OR US-20160351940-A1 OR US-20130252054-A1 OR US-20100310926-A1 OR US-20190027789-A1 OR US-20170125764-A1 OR US-20110008670-A1 OR US-20190379028-A1 OR US-20050225926-A1 OR US-20060024572-A1 OR US-20200295341-A1).did. AND PGPB.dbnm.) OR ((US-8236441-B2 OR US-6521374-B1 OR US-6432574-B1 OR US-8871373-B2 OR US-5849431-A OR US-9640833-B2 OR US-6071638-A OR US-7935445-B2 OR US-5171647-A OR US-4822377-A OR US-8310809-B2 OR US-8628877-B2 OR US-6456484-B1).did. AND USPT.dbnm.) OR ((WO-2017047278-A1 OR WO-2012051402-A1 OR EP-2325927-A1 OR JP-3754220-B2).did. AND FPRS.dbnm.) OR ((JP-2009289714-A OR JP-2013187077-A).did. AND JPAB.dbnm.) OR ((US-3761314-A).did. AND USOC.dbnm.)					
L93	12	("20150037638"|"20110067227"|"20140147714"|"20070269685"|"20120009450"|"20050221178"|"20110081574"|"20110262779"|"20160351940"|"20100190056"|"20160218343"|"20130252054").PN.	(US-PGPUB; USPAT)	OR	ON	ON	2022/08/25 04:49 PM
L94	15	("2007/0269685").urpn. AND (PGPB | USPT |	(US-PGPUB; USPAT; USOCR)	OR	ON	ON	2022/08/25 04:52 PM

		USOC).dbnm.					
L95	36	(Artificial Intelligence) More like doc: US-20070269685-A1 Text: (US-8084158-B2 OR EP-2181482-A1 OR WO-2009015282-A1 OR US-20090029240-A1 OR US-8236441-B2 OR EP-2181482-B1 OR KR-20100058501-A OR JP-2010534916-A OR JP-5378377-B2 OR KR-101566561-B1 OR EP-2429010-B1 OR EP-2429010-A1 OR US-7927732-B2 OR JP-2009507345-A OR KR-101304125-B1 OR US-4322484-A OR WO-2007028152-A2 OR EP-1946393-A2 OR US-20070117011-A1 OR KR-20080050452-A).did.	(US-PGPUB; USPAT; USOCR; FIT (AU, AP, AT, BE, BG, BR, BY, CA, CH, CN, CS, CU, CZ, DD, DE, DK, EA, EE, EP, ES, FI, FR, GB, HR, HU, ID, IE, IL, IS, IT, JP, KR, LT, LU, LV, MA, OA, RU, SU, WO, MC, MD, MY, NL, NO, NZ, PH, PL, PT, RO, RS, SE, SG, SI, SK, TH, TN, TR, TW, UA, VN); FPRS; EPO; JPO; DERWENT; IBM_TDB)	OR	ON	ON	2022/08/25 04:54 PM
L96	53	("3823040" | "4383013" | "4400415" | "4966822" | "5464705" | "5554459" | "5773164" | "5834133" | "5866274" | "5876237" | "6071638" | "6080506" | "6083639" | "6159253" | "6197074" | "6344292" | "6432574" | "6521374" | "6673128" | "RE38518" | "6780303" | "6875540" | "6884541" | "7033697" | "7927732" | "20010038945" | "20030035993" | "20030091893" | "20030175587" | "20030194601" | "20030211388" | "20040023108" | "20040121230" | "20040157115" | "20040157120" | "20040214076" | "20040237290" | "20040265683" | "20050255378" | "20060124973" | "20060172190" | "20070117011" | "20090109099").pn. OR	(US-PGPUB; USPAT; USOCR)	OR	ON	ON	2022/08/25 04:54 PM

		("8084158").urpn. AND (PGPB | USPT | USOC).dbnm.					
L97	33	(h01m50/$.cpc. h01m10/$.cpc. h01m50/$.ipc. h01m10/$.ipc.) AND (plural$4 several) near4 (tab notch lead terminal) AND (center middle central inner) near4 (tab notch lead terminal) WITH (insulat$4)	(FPRS; EPO; JPO; DERWENT)	OR	ON	ON	2022/08/25 04:59 PM
L98	1	"20190348703".pn.	(US-PGPUB; USPAT)	OR	ON	ON	2022/08/25 05:01 PM
L99	1	"11152638".pn.	(US-PGPUB; USPAT)	OR	ON	ON	2022/08/25 05:02 PM
L100	11	("9299967" | "20020068217" | "20090208825" | "20110262779" | "20120009450" | "20140186670" | "20140199571" | "20170084901" | "20170092926" | "20170250437" | "20170346064").pn. OR ("11152638").urpn. AND (PGPB | USPT | USOC).dbnm.	(US-PGPUB; USPAT; USOCR)	OR	ON	ON	2022/08/25 05:02 PM
L101	1	"9012053".pn.	(US-PGPUB; USPAT)	OR	ON	ON	2022/08/25 08:16 PM
L102	19	("2291110" | "3507703" | "3607417" | "4816352" | "7060387" | "7276313" | "20020061435" | "20040161662" | "20040202924" | "20050142436" | "20060240319" | "20100178559").pn. OR ("9012053").urpn. AND (PGPB | USPT | USOC).dbnm.	(US-PGPUB; USPAT; USOCR)	OR	ON	ON	2022/08/25 08:16 PM
L103	13	("2012/0009450").urpn. AND (PGPB | USPT | USOC).dbnm.	(US-PGPUB; USPAT; USOCR)	OR	ON	ON	2022/08/25 08:23 PM
L104	87	(h01m50/$.cpc. h01m10/$.cpc. h01m50/$.ipc. h01m10/$.ipc.) AND (plural$4 several multipl%5) near4 (tab	(FPRS; EPO; JPO; DERWENT)	OR	ON	ON	2022/08/25 08:31 PM

		notch lead terminal) AND (center middle central inner) near4 (tab notch lead terminal) WITH (insulat$4 plate cover)					
L105	668	(h01m50/$.cpc. h01m10/$.cpc. h01m50/$.ipc. h01m10/$.ipc.) AND (plural$4 several multipl%5) near4 (tab notch lead terminal) AND (center middle central inner) near4 (tab notch lead terminal) WITH (insulat$4 plate cover) NOT L97	(US-PGPUB; USPAT; FPRS; EPO; JPO; DERWENT)	OR	ON	ON	2022/08/25 08:32 PM
L106	0	(h01m50/$.cpc. h01m10/$.cpc. h01m50/$.ipc. h01m10/$.ipc.) AND (plural$4 several multipl%5) near4 (tab notch lead terminal) AND (center middle central inner) near4 (tab notch lead terminal) WITH (insulat$4) near4 (plate cover layer) NOT L97	(US-PGPUB; USPAT; FPRS; EPO; JPO; DERWENT)	OR	ON	ON	2022/08/25 08:32 PM
L107	131	(h01m50/$.cpc. h01m10/$.cpc. h01m50/$.ipc. h01m10/$.ipc.) AND (plural$4 several multipl%5) near4 (tab notch lead terminal) AND (center middle central inner) near4 (tab notch lead terminal) WITH (insulat$4) near4 (plate cover layer)	(US-PGPUB; USPAT; FPRS; EPO; JPO; DERWENT)	OR	ON	ON	2022/08/25 08:32 PM
L108	0	(h01m50/$.cpc. h01m10/$.cpc. h01m50/$.ipc. h01m10/$.ipc.) AND (plural$4 several) near4 (tab notch lead terminal) AND (center middle central inner) near4 (tab notch lead terminal) WITH (insulat$4) NOT L97	(US-PGPUB; USPAT)	OR	ON	ON	2022/08/25 08:32 PM
L109	231	(h01m50/$.cpc. h01m10/$.cpc.	(US-PGPUB; USPAT; FPRS; EPO; JPO;	OR	ON	ON	2022/08/25 08:37 PM

		h01m50/$.ipc. h01m10/$.ipc.) AND (plural$4 several multipl%5) near4 (tab notch lead terminal) AND (center middle central inner) near4 (tab notch lead terminal) WITH (insulat$4) NOT L107	DERWENT)				
L110	174	(h01m50/$.cpc. h01m10/$.cpc. h01m50/$.ipc. h01m10/$.ipc.) AND (plural$4 several multipl%5) near4 (tab notch lead terminal) AND (center middle central inner) near4 (tab notch lead terminal) WITH (insulat$4) NOT L107 AND (wound wind$4 roll$4)	(US-PGPUB; USPAT; FPRS; EPO; JPO; DERWENT)	OR	ON	ON	2022/08/25 08:37 PM
L111	1	("2014/0050956").urpn. AND (PGPB | USPT | USOC).dbnm.	(US-PGPUB; USPAT; USOCR)	OR	ON	ON	2022/08/25 08:42 PM
L112	15	("20020061435" | "20060127751" | "20090239133" | "20100190056" | "20110067227" | "20110104541" | "20110151295" | "20120279053" | "20140050956" | "20160164133" | "20170250437" | "20170365839" | "20180026295" | "20180040918" | "20190379028").pn. OR ("10700384").urpn. AND (PGPB | USPT | USOC).dbnm.	(US-PGPUB; USPAT; USOCR)	OR	ON	ON	2022/08/25 08:43 PM
L113	43	(Artificial Intelligence) More like doc: US-20140050956-A1 Text: (KR-20150030537-A OR TW-201407859-A OR JP-3187576-U OR CN-114050324-A OR KR-20180048419-A OR KR-102103900-B1 OR US-10700384-B2 OR EP-3514876-A1 OR	(US-PGPUB; USPAT; USOCR; FIT (AU, AP, AT, BE, BG, BR, BY, CA, CH, CN, CS, CU, CZ, DD, DE, DK, EA, EE, EP, ES, FI, FR, GB, HR, HU, ID, IE, IL, IS, IT, JP, KR, LT, LU, LV, MA, OA, RU, SU, WO, MC, MD, MY, NL, NO, NZ, PH, PL, PT, RO, RS, SE, SG, SI, SK,	OR	ON	ON	2022/08/25 08:46 PM

		US-20190027789-A1 OR CN-103594736-A OR CN-108496269-B OR TW-201244225-A OR US-20040191625-A1 OR CN-102760905-A OR EP-3136494-A1 OR KR-20150122340-A OR CN-101714651-B OR CN-108496269-A OR CN-101714651-A OR CN-202308131-U).did.	TH, TN, TR, TW, UA, VN); FPRS; EPO; JPO; DERWENT; IBM_TDB)				
L114	0	20150037638,pn.	(US-PGPUB; USPAT)	OR	ON	ON	2022/08/25 08:48 PM
L115	1	"20150037638".pn.	(US-PGPUB; USPAT)	OR	ON	ON	2022/08/25 08:48 PM
L116	53	((US-20130108903-A1 OR US-20150072204-A1 OR US-20180026295-A1 OR US-20100081052-A1 OR US-20070117011-A1 OR US-20030211388-A1 OR US-20010038945-A1 OR US-20090029240-A1 OR US-20200343520-A1 OR US-20110151295-A1 OR US-20210005936-A1 OR US-20180145304-A1 OR US-20080026293-A1 OR US-20100124694-A1 OR US-20160351966-A1 OR US-20110067227-A1 OR US-20070196730-A1 OR US-20010023038-A1 OR US-20160351940-A1 OR US-20130252054-A1 OR US-20100310926-A1 OR US-20190027789-A1 OR US-20170125764-A1 OR US-20110008670-A1 OR US-20190379028-A1 OR US-20050225926-A1 OR US-20060024572-A1 OR US-20150037638-A1 OR US-20190348703-A1 OR US-20120009450-A1 OR	(US-PGPUB; USPAT; USOCR; FIT (AU, AP, AT, BE, BG, BR, BY, CA, CH, CN, CS, CU, CZ, DD, DE, DK, EA, EE, EP, ES, FI, FR, GB, HR, HU, ID, IE, IL, IS, IT, JP, KR, LT, LU, LV, MA, OA, RU, SU, WO, MC, MD, MY, NL, NO, NZ, PH, PL, PT, RO, RS, SE, SG, SI, SK, TH, TN, TR, TW, UA, VN); FPRS; EPO; JPO; DERWENT; IBM_TDB)	OR	ON	ON	2022/08/25 08:50 PM

		US-20140050956-A1 OR US-20200295341-A1).did. AND PGPB.dbnm.) OR ((US-8236441-B2 OR US-6521374-B1 OR US-6432574-B1 OR US-8871373-B2 OR US-5849431-A OR US-9640833-B2 OR US-6071638-A OR US-7935445-B2 OR US-5171647-A OR US-4822377-A OR US-8310809-B2 OR US-8628877-B2 OR US-6456484-B1).did. AND USPT.dbnm.) OR ((WO-2017047278-A1 OR WO-2012051402-A1 OR EP-2325927-A1 OR JP-3754220-B2 OR CN-114128033-A).did. AND FPRS.dbnm.) OR ((JP-2009289714-A OR JP-2013187077-A).did. AND JPAB.dbnm.) OR ((US-3761314-A).did. AND USOC.dbnm.)					
L117	2	"20120009450".pn. "20130108903".pn.	(US-PGPUB; USPAT)	OR	ON	ON	2022/08/25 09:02 PM
L119	1	"3234421".pn.	(US-PGPUB; USPAT)	OR	ON	ON	2022/08/30 02:52 PM
L120	6	waymouth-j$.inv. AND koury-f$.inv.	(US-PGPUB; USPAT)	OR	ON	ON	2022/08/30 02:53 PM
L121	2	"20140050956".pn. "20130108903".pn.	(US-PGPUB; USPAT)	OR	ON	ON	2022/09/02 03:30 PM
L122	12	("20150037638"|"20110067227"|"20140147714"|"20070269685"|"20120009450"|"20050221178"|"20110081574"|"20110262779"|"20160351940"|"20100190056"|"20160218343"|"20130252054").PN.	(US-PGPUB; USPAT)	OR	ON	ON	2022/09/06 01:20 PM
L123	6	"20140050956".pn. "20130108903".pn. "20120009450".pn. "20110067227".pn. "20130252054".pn. "4822377".pn.	(US-PGPUB; USPAT)	OR	ON	ON	2022/09/07 02:36 PM
L124	2	("20060127774"|"20100190056").PN.	(US-PGPUB; USPAT)	OR	ON	ON	2022/12/16 12:17 PM
L125	183	(h01m50/$.cpc.	(US-PGPUB; USPAT;	OR	ON	ON	2022/12/16

		h01m10/$.cpc. h01m50/$.ipc. h01m10/$.ipc.) AND (plural$4 several multipl%5) near4 (tab notch lead terminal) AND (center middle central inner) near4 (tab notch lead terminal) WITH (insulat$4) NOT L107 AND (wound wind$4 roll$4)	FPRS; EPO; JPO; DERWENT)				12:40 PM
L126	197	(h01m50/$.cpc. h01m10/$.cpc. h01m50/$.ipc. h01m10/$.ipc.) AND (plural$4 several multipl$5) near4 (tab notch lead terminal) AND (center middle central inner) near4 (tab notch lead terminal) WITH (insulat$4) NOT L107 AND (wound wind$4 roll$4)	(US-PGPUB; USPAT; FPRS; EPO; JPO; DERWENT)	OR	ON	ON	2022/12/16 01:01 PM
L127	38	(h01m50/$.cpc. h01m10/$.cpc. h01m50/$.ipc. h01m10/$.ipc.) AND (plural$4 several multipl$5) near4 (tab notch lead terminal) AND (center middle central inner) near4 (tab notch lead terminal) WITH (insulat$4) NOT L107 AND (wound wind$4 roll$4) AND (tan lead terminal) WITH (overlap$4 overl$4 shingl$4 superimpos$4)	(US-PGPUB; USPAT; FPRS; EPO; JPO; DERWENT)	OR	ON	ON	2022/12/16 01:03 PM
L128	57	(h01m50/$.cpc. h01m10/$.cpc. h01m50/$.ipc. h01m10/$.ipc.) AND (plural$4 several multipl$5) near4 (tab notch lead terminal) AND (center middle central inner) near4 (tab notch lead terminal) WITH (insulat$4) NOT L107 AND (wound wind$4 roll$4) AND (tab lead terminal) WITH (overlap$4 overl$4 shingl$4 superimpos$4)	(US-PGPUB; USPAT; FPRS; EPO; JPO; DERWENT)	OR	ON	ON	2022/12/16 01:03 PM

L129	1	"20160351966".pn.	(US-PGPUB; USPAT)	OR	ON	ON	2022/12/16 01:09 PM
L130	100	(h01m50/$.cpc. h01m10/$.cpc. h01m50/$.ipc. h01m10/$.ipc.) AND (plural$4 several multipl%5) near4 (tab notch lead terminal) AND (center middle central inner) near4 (tab notch lead terminal) WITH (insulat$4 plate cover)	(FPRS; EPO; JPO; DERWENT)	OR	ON	ON	2022/12/16 01:42 PM
L131	105	(h01m50/$.cpc. h01m10/$.cpc. h01m50/$.ipc. h01m10/$.ipc.) AND (plural$4 several multipl$5) near4 (tab notch lead terminal) AND (center middle central inner) near4 (tab notch lead terminal) WITH (insulat$4 plate cover)	(FPRS; EPO; JPO; DERWENT)	OR	ON	ON	2022/12/16 01:43 PM
L132	0	(h01m50/538,536.cpc. h01m10/1422,0431.cpc.) AND (wound roll$4 cylind$5) SAME tab WITH ben$4 same2 tab WITH (distribut$4 dispers$4 allocat$4 allot$4 apportion$4 ration$4) near4 (equal$4 axis around about)	(US-PGPUB; USPAT)	OR	ON	ON	2022/12/16 02:07 PM
L133	0	(h01m50/$.cpc. h01m10/$.cpc.) AND (wound roll$4 cylind$5) SAME tab WITH ben$4 same2 tab WITH (distribut$4 dispers$4 allocat$4 allot$4 apportion$4 ration$4) near4 (equal$4 axis around about)	(US-PGPUB; USPAT)	OR	ON	ON	2022/12/16 02:07 PM
L134	0	(h01m50/$.cpc. h01m10/$.cpc.) AND (wound roll$4 cylind$5) SAME tab WITH ben$4 same2 tab WITH (distribut$4 dispers$4 allocat$4 allot$4 apportion$4 ration$4) .clm.	(US-PGPUB; USPAT)	OR	ON	ON	2022/12/16 02:08 PM

L135	86	(h01m50/$.cpc. h01m10/$.cpc.) AND (wound roll$4 cylind$5) SAME tab WITH ben$4 .clm.	(US-PGPUB; USPAT)	OR	ON	ON	2022/12/16 02:08 PM
L136	73423	(h01m50/$.cpc. h01m10/$.cpc.) AND (wound roll$4 cylind$5) tab WITH (distribut$4 dispers$4 allocat$4 allot$4 apportion$4 ration$4) .clm.	(US-PGPUB; USPAT)	OR	ON	ON	2022/12/16 02:08 PM
L137	168	(h01m50/$.cpc. h01m10/$.cpc.) AND (wound roll$4 cylind$5) same2 (tab electrode) WITH (distribut$4 dispers$4 allocat$4 allot$4 apportion$4 ration$4) .clm.	(US-PGPUB; USPAT)	OR	ON	ON	2022/12/16 02:08 PM
L138	27	(h01m50/$.cpc. h01m10/$.cpc.) AND (wound roll$4 cylind$5) same2 (tab electrode) WITH (distribut$4 dispers$4 allocat$4 allot$4 apportion$4 ration$4) same3 (tab electrode) WITH (overlap$4 laminat$4).clm.	(US-PGPUB; USPAT)	OR	ON	ON	2022/12/16 02:09 PM
L139	1101	(h01m50/$.cpc. h01m10/$.cpc.) AND (wound roll$4 cylind$5) same2 (tab electrode) WITH (overlap$4 laminat$4).clm. NOT L138	(US-PGPUB; USPAT)	OR	ON	ON	2022/12/16 02:11 PM
L140	104	(h01m50/$.cpc. h01m10/$.cpc.) AND (wound roll$4 cylind$5) same2 (mutipl$4 plural$4) near3 (tab electrode) WITH (overlap$4 laminat$4).clm. NOT L138	(US-PGPUB; USPAT)	OR	ON	ON	2022/12/16 02:11 PM
L141	56	(h01m50/$.cpc. h01m10/$.cpc.) AND (wound roll$4 cylind$5) same2 (mutipl$4 plural$4) near3 (tab electrode) near3 (overlap$4 laminat$4).clm. NOT L138	(US-PGPUB; USPAT)	OR	ON	ON	2022/12/16 02:11 PM

L142	1	"11652232".pn.	(US-PGPUB; USPAT)	OR	ON	ON	2023/11/03 01:28 PM
L143	1	"20230246222".pn.	(US-PGPUB; USPAT)	OR	ON	ON	2023/11/03 01:33 PM
L144	4	"20110067227".pn. "20120009450".pn. "20130108903".pn. "20130252054".pn.	(US-PGPUB; USPAT)	OR	ON	ON	2023/11/03 02:46 PM
L145	63	(h01m50/$.cpc. h01m10/$.cpc.) AND (wound roll$4 cylind$5) same2 (mutipl$4 plural$4) near3 (tab electrode) near3 (overlap$4 laminat$4).clm. NOT L138	(US-PGPUB; USPAT)	OR	ON	ON	2023/11/03 02:54 PM
L146	2	L142 L143	(US-PGPUB; USPAT)	OR	ON	ON	2023/11/03 03:34 PM
L147	22	("4822377" | "6569565" | "20010023038" | "20050003264" | "20050287428" | "20060127774" | "20070196730" | "20100081052" | "20100190056" | "20100310926" | "20110067227" | "20110293977" | "20120009450" | "20120208055" | "20130108903" | "20130252054" | "20130344364" | "20140050956" | "20150295270" | "20160351966" | "20180145304" | "20190379028").pn. AND (PGPB | USPT | USOC).dbnm.	(US-PGPUB; USPAT; USOCR)	OR	ON	ON	2023/11/03 04:02 PM
L148	32	(Artificial Intelligence) More like doc: US-11652232-B2 Text: (US-2020295341-A1 OR US-2023246222-A1 OR EP-3611781-A1 OR WO-2018190691-A1 OR KR-20180116156-A OR KR-102126970-B1 OR JP-7341585-B2 OR JP-2020505717-A OR JP-2021177490-A OR US-11349182-B2 OR	(US-PGPUB; USPAT; USOCR; FIT (AU, AP, AT, BE, BG, BR, BY, CA, CH, CN, CS, CU, CZ, DD, DE, DK, EA, EE, EP, ES, FI, FR, GB, HR, HU, ID, IE, IL, IS, IT, JP, KR, LT, LU, LV, MA, OA, RU, SU, WO, MC, MD, MY, NL, NO, NZ, PH, PL, PT, RO, RS, SE, SG, SI, SK, TH, TN, TR, TW, UA, VN); FPRS; EPO;	OR	ON	ON	2023/11/03 04:02 PM

		CN-110476273-B OR US-2019379028-A1 OR EP-3567666-B1 OR CN-110476273-A OR KR-101137372-B1 OR KR-20140140405-A OR KR-101584298-B1 OR JP-5194072-B2 OR KR-102226916-B1 OR CN-116544526-A).did.	JPO; DERWENT; IBM_TDB)				
L149	2	(h01m50/538,536.cpc. h01m10/1422,0431.cpc.) AND (wound roll$4 cylind$5) SAME tab near3 notch$4 WITH (distribut$4 dispers$4 allocat$4 allot$4 apportion$4 ration$4) near4 (equal$4 axis around about)	(US-PGPUB; USPAT)	OR	ON	ON	2024/02/16 04:14 PM
L150	2	(h01m50/538,536.cpc. h01m10/1422,0431.cpc.) AND (wound roll$4 cylind$5) SAME tab near3 notch$4 WITH (distribut$4 dispers$4 allocat$4 allot$4 apportion$4 ration$4) near4 (equal$4 axis around about).clm.	(US-PGPUB; USPAT)	OR	ON	ON	2024/02/16 04:14 PM
L151	2	(h01m50/$.cpc. h01m10/$.cpc.) AND (wound roll$4 cylind$5) SAME tab near3 notch$4 WITH (distribut$4 dispers$4 allocat$4 allot$4 apportion$4 ration$4) near4 (equal$4 axis around about).clm.	(US-PGPUB; USPAT)	OR	ON	ON	2024/02/16 04:20 PM
L152	67	(h01m50/$.cpc. h01m10/$.cpc.) AND (wound roll$4 cylind$5) same2 (mutipl$4 plural$4) near3 (tab electrode) near3 (overlap$4 laminat$4).clm. NOT L138	(US-PGPUB; USPAT)	OR	ON	ON	2024/02/16 04:20 PM
L153	4	"3761314".pn. "20050287428".pn. "20060024572".pn. "20050287432".pn.	(US-PGPUB; USPAT)	OR	ON	ON	2024/03/06 08:44 AM
L154	54	((US-20130108903-A1 OR US-20150072204-A1 OR US-	(US-PGPUB; USPAT; USOCR; FIT (AU, AP, AT, BE, BG, BR, BY,	OR	ON	ON	2024/04/17 10:11 AM

		20180026295-A1 OR US-20100081052-A1 OR US-20070117011-A1 OR US-20030211388-A1 OR US-20010038945-A1 OR US-20090029240-A1 OR US-20160351966-A1 OR US-20110151295-A1 OR US-20210005936-A1 OR US-20180145304-A1 OR US-20080026293-A1 OR US-20100124694-A1 OR US-20190379028-A1 OR US-20110067227-A1 OR US-20070196730-A1 OR US-20010023038-A1 OR US-20160351940-A1 OR US-20130252054-A1 OR US-20100310926-A1 OR US-20190027789-A1 OR US-20170125764-A1 OR US-20110008670-A1 OR US-20050225926-A1 OR US-20060024572-A1 OR US-20200343520-A1 OR US-20150037638-A1 OR US-20190348703-A1 OR US-20120009450-A1 OR US-20140050956-A1 OR US-20200295341-A1 OR US-20230246222-A1).did. AND PGPB.dbnm.) OR ((US-8236441-B2 OR US-6521374-B1 OR US-6432574-B1 OR US-8871373-B2 OR US-5849431-A OR US-9640833-B2 OR US-6071638-A OR US-7935445-B2 OR US-5171647-A OR US-4822377-A OR US-8310809-B2 OR US-8628877-B2 OR US-6456484-B1 OR US-11652232-B2).did. AND USPT.dbnm.) OR ((US-3761314-A).did. AND	CA, CH, CN, CS, CU, CZ, DD, DE, DK, EA, EE, EP, ES, FI, FR, GB, HR, HU, ID, IE, IL, IS, IT, JP, KR, LT, LU, LV, MA, OA, RU, SU, WO, MC, MD, MY, NL, NO, NZ, PH, PL, PT, RO, RS, SE, SG, SI, SK, TH, TN, TR, TW, UA, VN); FPRS; EPO; JPO; DERWENT; IBM_TDB)				

		USOC.dbnm.) OR ((WO-2012051402-A1 OR WO-2017047278-A1 OR EP-2325927-A1 OR JP-3754220-B2).did. AND FPRS.dbnm.) OR ((JP-2009289714-A OR JP-2013187077-A).did. AND JPAB.dbnm.)					
L155	2	"11652232".pn. "11973177".pn.	(US-PGPUB; USPAT)	OR	ON	ON	2024/08/22 09:49 PM
L156	1	"20240243335".pn.	(US-PGPUB; USPAT)	OR	ON	ON	2024/08/22 09:51 PM
L157	1	"20240243336".pn.	(US-PGPUB; USPAT)	OR	ON	ON	2024/08/22 09:52 PM
L158	4	L155 L156 L157	(US-PGPUB; USPAT)	OR	ON	ON	2024/08/22 09:53 PM
L159	0	L158 AND second near3 non$2coating	(US-PGPUB; USPAT)	OR	ON	ON	2024/08/22 09:53 PM
L160	0	L158 AND second WITH non$2coating	(US-PGPUB; USPAT)	OR	ON	ON	2024/08/22 09:54 PM
L161	4	L158 AND non$2coating	(US-PGPUB; USPAT)	OR	ON	ON	2024/08/22 09:54 PM
L162	4	L158 AND bent near4 electrical$4 near4 connect$4	(US-PGPUB; USPAT)	OR	ON	ON	2024/08/22 09:56 PM
L163	1	L158 AND spac$4 near2 apart	(US-PGPUB; USPAT)	OR	ON	ON	2024/08/22 09:58 PM
L164	4	L158 AND (spac$4 apart)	(US-PGPUB; USPAT)	OR	ON	ON	2024/08/22 09:58 PM
L165	57	((US-20130108903-A1 OR US-20150072204-A1 OR US-20180026295-A1 OR US-20100081052-A1 OR US-20070117011-A1 OR US-20030211388-A1 OR US-20010038945-A1 OR US-20090029240-A1 OR US-20160351966-A1 OR US-20110151295-A1 OR US-20210005936-A1 OR US-20180145304-A1 OR US-20080026293-A1 OR US-20100124694-A1 OR US-20190379028-A1 OR US-20110067227-A1 OR US-20070196730-A1 OR US-	(US-PGPUB; USPAT; USOCR; FIT (AU, AP, AT, BE, BG, BR, BY, CA, CH, CN, CS, CU, CZ, DD, DE, DK, EA, EE, EP, ES, FI, FR, GB, HR, HU, ID, IE, IL, IS, IT, JP, KR, LT, LU, LV, MA, OA, RU, SU, WO, MC, MD, MY, NL, NO, NZ, PH, PL, PT, RO, RS, SE, SG, SI, SK, TH, TN, TR, TW, UA, VN); FPRS; EPO; JPO; DERWENT; IBM_TDB)	OR	ON	ON	2024/08/22 09:59 PM

		20010023038-A1 OR US-20160351940-A1 OR US-20130252054-A1 OR US-20100310926-A1 OR US-20190027789-A1 OR US-20170125764-A1 OR US-20110008670-A1 OR US-20050225926-A1 OR US-20060024572-A1 OR US-20200343520-A1 OR US-20150037638-A1 OR US-20190348703-A1 OR US-20120009450-A1 OR US-20140050956-A1 OR US-20200295341-A1 OR US-20230246222-A1 OR US-20240243335-A1 OR US-20240243336-A1).did. AND PGPB.dbnm.) OR ((US-8236441-B2 OR US-6521374-B1 OR US-6432574-B1 OR US-8871373-B2 OR US-5849431-A OR US-9640833-B2 OR US-6071638-A OR US-7935445-B2 OR US-5171647-A OR US-4822377-A OR US-8310809-B2 OR US-8628877-B2 OR US-6456484-B1 OR US-11652232-B2 OR US-11973177-B2).did. AND USPT.dbnm.) OR ((US-3761314-A).did. AND USOC.dbnm.) OR ((WO-2012051402-A1 OR WO-2017047278-A1 OR EP-2325927-A1 OR JP-3754220-B2).did. AND FPRS.dbnm.) OR ((JP-2009289714-A OR JP-2013187077-A).did. AND JPAB.dbnm.)					
L166	4	"3761314".pn. "20050287428".pn. "20060024572".pn. "20050287432".pn.	(US-PGPUB; USPAT)	OR	ON	ON	2024/08/22 10:08 PM
L167	75	(h01m50/$.cpc.	(US-PGPUB; USPAT)	OR	ON	ON	2024/08/22

		h01m10/$.cpc.) AND (wound roll$4 cylind$5) same2 (mutipl$4 plural$4) near3 (tab electrode) near3 (overlap$4 laminat$4).clm. NOT L138					10:08 PM
L168	1	"11973177".pn.	(US-PGPUB; USPAT)	OR	ON	ON	2024/10/08 09:39 AM
L169	2	"20240243335".pn. "20240243336".pn.	(US-PGPUB; USPAT)	OR	ON	ON	2024/10/08 09:41 AM
L170	2	"11973177".pn. "11652232".pn.	(US-PGPUB; USPAT)	OR	ON	ON	2024/10/08 09:58 AM
L171	24	(h01m10/$.cpc. h01m50/$.cpc. h01m10/$.ipc. h01m50/$.ipc.) AND (kim-j$.inv. kim-h$.inv. kim-s$.inv.) AND (electrode cathode anode) WITH (notch$4) near4 (overlap$4 plural$4)	(US-PGPUB; USPAT; FPRS; EPO; JPO; DERWENT)	OR	ON	ON	2024/10/08 12:28 PM
L172	2	L170 AND overlap$4.clm.	(US-PGPUB; USPAT)	OR	ON	ON	2024/10/08 02:44 PM
L173	1	"20210391579".pn.	(US-PGPUB; USPAT)	OR	ON	ON	2024/10/09 02:50 PM

PE2E SEARCH - Search History (Interference)

There are no Interference searches to show.

PE2E SEARCH - Search History (Prior Art)

Ref #	Hits	Search Query	DBs	Default Operator	Plurals	British Equivalents	Time Stamp
L2	14	("20010023038"|"20050003264"|"20150295270"|"20110067227"|"20120009450"|"20160351966"|"20110293977"|"20100310926"|"6569565"|"20070196730"|"20050287428"|"20130344364"|"20190379028"|"20120208055").PN.	(US-PGPUB; USPAT)	OR	ON	ON	2021/05/17 02:34 PM
L3	9	("20150037638"|"20110067227"|"20140147714"|"20120009450"|"20110081574"|"20160351940"|"20100190056"|"20160218343"|"20130252054").PN.	(US-PGPUB; USPAT)	OR	ON	ON	2021/05/17 02:41 PM
L4	1	"20100310926".pn.	(US-PGPUB; USPAT)	OR	ON	ON	2021/05/17 02:46 PM
L5	21124	(h01m10/$.cpc. h01m50/$.cpc.) and (kim-j$.inv. kim-h$.inv. kim-s$.inv.)	(US-PGPUB; USPAT; FPRS; EPO; JPO; DERWENT)	OR	ON	ON	2021/05/17 02:56 PM
L6	260	(h01m10/$.cpc. h01m50/$.cpc. h01m10/$.ipc. h01m50/$.ipc.) and (kim-j$.inv. kim-h$.inv. kim-s$.inv.) and (electrode cathode anode) with (tab notch) near4 (overlap$4 plural$4)	(US-PGPUB; USPAT; FPRS; EPO; JPO; DERWENT)	OR	ON	ON	2021/05/17 02:57 PM
L7	144	(h01m10/$.cpc. h01m50/$.cpc. h01m10/$.ipc. h01m50/$.ipc.) and (electrode cathode anode) with (tab notch) near4 (overlap$4 plural$4) and (battery mea electrode near3 assembly) with (wound jelly near3 roll cylindrical)	(FPRS; EPO; JPO; DERWENT)	OR	ON	ON	2021/05/17 04:11 PM
L8	132	L7 not L6	(FPRS; EPO; JPO; DERWENT)	OR	ON	ON	2021/05/17 04:12 PM
L9	8	("20050277019"|"20090169990"|"20090317707"|"20030235736"|"2006	(US-PGPUB; USPAT)	OR	ON	ON	2021/05/17 04:15 PM

		0147793"|"20020192548"|"20060110658"|"20070154797").PN.					
L10	0	("2016/0351966").URPN.	(USPAT)	OR	ON	ON	2021/05/17 04:31 PM
L11	1	(15/115220).APP.	(USPAT; USOCR)	OR	ON	ON	2021/05/17 04:31 PM
L12	10	("20050287428" | "20060024572" | "20070196730" | "20120251854" | "20120328924" | "20130216879" | "20140045041" | "7364817" | "7700222" | "7955736").PN. OR ("10381688").URPN.	(US-PGPUB; USPAT; USOCR)	OR	ON	ON	2021/05/17 04:31 PM
L13	6	("2007/0196730").URPN.	(USPAT)	OR	ON	ON	2021/05/17 04:33 PM
L14	10	("3490949" | "4053687" | "6376121" | "6596434" | "6818025" | "7332246" | "7364817").PN. OR ("7700222").URPN.	(US-PGPUB; USPAT; USOCR)	OR	ON	ON	2021/05/17 04:33 PM
L15	14	("20020164524" | "20030118912" | "20050225926" | "5736270" | "6071638" | "6222720" | "6328769" | "7364817" | "7618742" | "7670715" | "7678501" | "7700222").PN. OR ("8310809").URPN.	(US-PGPUB; USPAT; USOCR)	OR	ON	ON	2021/05/17 04:34 PM
L16	11	("20020191370" | "20030086239" | "20060024572" | "20060240322" | "20060240323" | "3237274" | "5849431" | "6456484" | "6896993" | "8310809").PN. OR ("8628877").URPN.	(US-PGPUB; USPAT; USOCR)	OR	ON	ON	2021/05/17 04:35 PM
L17	13	("3761314" | "5525441" | "5635312" | "5736270").PN. OR ("6328769").URPN.	(US-PGPUB; USPAT; USOCR)	OR	ON	ON	2021/05/18 10:22 AM
L18	44	("3761314").URPN.	(USPAT)	OR	ON	ON	2021/05/18 10:23 AM
L19	5	("20050142436" | "3761314").PN. OR ("7955736").URPN.	(US-PGPUB; USPAT; USOCR)	OR	ON	ON	2021/05/18 10:24 AM
L20	3	("2005/0142436").URPN.	(USPAT)	OR	ON	ON	2021/05/18 10:34 AM
L21	1863	h01m50/538.cpc.	(US-PGPUB; USPAT)	OR	ON	ON	2021/05/18

							11:26 AM
L22	4637	(h01m50/538.cpc. h01m10/0422.cpc. h01m50/531.cpc.)	(US-PGPUB; USPAT)	OR	ON	ON	2021/05/18 01:20 PM
L23	66	(h01m50/538.cpc. h01m10/0422.cpc. h01m50/531.cpc.) and (uncoated (free no remov$4 without) near3 active near3 material) with (plural$4 several) near4 (tab notch lead terminal)	(US-PGPUB; USPAT)	OR	ON	ON	2021/05/18 01:43 PM
L24	40	("20010038945" | "20030091893" | "20030175587" | "20030194601" | "20030211388" | "20040023108" | "20040121230" | "20040157115" | "20040157120" | "20040214076" | "20040237290" | "20040265683" | "20050255378" | "20060124973" | "20060172190" | "20070117011" | "20090109099" | "4400415" | "4966822" | "5464705" | "5554459" | "5773164" | "5834133" | "5866274" | "5876237" | "6080506" | "6159253" | "6197074" | "6344292" | "6432574" | "6521374" | "6673128" | "6780303" | "6875540" | "6884541" | "7033697" | "RE38518").PN. OR ("7927732").URPN.	(US-PGPUB; USPAT; USOCR)	OR	ON	ON	2021/05/18 02:24 PM
L25	49	("20010038945" | "20030035993" | "20030091893" | "20030175587" | "20030194601" | "20030211388" | "20040023108" | "20040121230" | "20040157115" | "20040157120" | "20040214076" | "20040237290" | "20040265683" | "20050255378" |	(US-PGPUB; USPAT; USOCR)	OR	ON	ON	2021/05/18 02:29 PM

		"20060124973" | "20060172190" | "20060210857" | "20070117011" | "20090109099" | "3823040" | "4049888" | "4383013" | "4400415" | "4966822" | "5464705" | "5554459" | "5773164" | "5834133" | "5866274" | "5876237" | "6071638" | "6080506" | "6083639" | "6159253" | "6197074" | "6344292" | "6432574" | "6521374" | "6673128" | "6780303" | "6875540" | "6884541" | "7033697" | "7927732" | "8084158" | "RE38518").PN. OR ("8236441").URPN.					
L26	1	"20090029240".pn.	(US-PGPUB; USPAT; USOCR)	OR	ON	ON	2021/05/18 02:29 PM
L27	9	("2009/0029240").URPN.	(USPAT)	OR	ON	ON	2021/05/18 02:30 PM
L28	1	"20130108903".pn.	(US-PGPUB; USPAT)	OR	ON	ON	2021/05/18 02:31 PM
L29	100	("4053687" | "4237199" | "4283843" | "4539273" | "5631102").PN. OR ("5849431").URPN.	(US-PGPUB; USPAT; USOCR)	OR	ON	ON	2021/05/18 02:37 PM
L30	1	"20200295341".pn.	(US-PGPUB; USPAT; USOCR)	OR	ON	ON	2021/05/18 03:13 PM
L32	38	(h01m50/$.cpc. h01m10/$.cpc. h01m50/$.ipc. h01m10/$.ipc.) and (uncoated (free no remov$4 without) near3 active near3 material) same (plural$4 several) near4 (tab notch lead terminal)	(FPRS; EPO; JPO; DERWENT)	OR	ON	ON	2021/05/27 11:35 AM
L36	3	(h01m50/$.cpc. h01m10/$.cpc. h01m50/$.ipc. h01m10/$.ipc.) and (uncoated (free no remov$4 without) near3 active near3 material) same (plural$4 several) near4 (tab notch lead) and electrode with terminal	(FPRS; EPO; JPO; DERWENT)	OR	ON	ON	2021/05/27 03:37 PM
L37	66	(h01m50/538.cpc. h01m10/0422.cpc.	(US-PGPUB; USPAT)	OR	ON	ON	2021/05/27 03:40 PM

		h01m50/531.cpc.) and (uncoated (free no remov$4 without) near3 active near3 material) same (plural$4 several) near4 (tab notch lead) and electrode with terminal					
L38	0	(h01m50/538.cpc. h01m10/0422.cpc. h01m50/531.cpc.) and (uncoated (free no remov$4 without) near3 active near3 material) same (plural$4 several) near4 (tab notch lead) and (electrode anode cathode positive negative) with terminal not L37	(US-PGPUB; USPAT)	OR	ON	ON	2021/05/27 04:00 PM
L39	26	(h01m50/$.cpc.) and (uncoated (free no remov$4 without) near3 active near3 material) same (plural$4 several) near4 (tab notch lead) and electrode with terminal not L37	(US-PGPUB; USPAT)	OR	ON	ON	2021/05/27 04:00 PM
L40	27	(h01m50/$.cpc.) and (uncoated (free no remov$4 without) near3 active near3 material) same (plural$4 several) near4 (tab notch lead) and (electrode anode cathode positive negative) with terminal not L37	(US-PGPUB; USPAT)	OR	ON	ON	2021/05/27 04:04 PM
L41	4	(h01m50/$.cpc.) and (uncoated (free no remov$4 without) near3 active near3 material) same (plural$4 several) near4 (tab notch lead) same (terminal lead tab connect$4) near3 (attach$4 add$4 fix$4 secur$4 append$4 join$4 fasten$4) not L37 not L40	(US-PGPUB; USPAT)	OR	ON	ON	2021/05/27 04:15 PM
L42	8	"20050287428".pn. "20090148766".pn. "20090297941".pn. "20110076547".pn. "20110076547".pn. "20160197379".pn.	(US-PGPUB; USPAT)	OR	ON	ON	2021/05/27 04:18 PM

		"7923139".pn. "7955736".pn. "8450006".pn.					
L43	26	(h01m50/$.cpc.) and (uncoated (free no remov$4 without) near3 active near3 material) near4 (edge top length) same (terminal lead tab connect$4) near3 (attach$4 add$4 fix$4 secur$4 append$4 join$4 fasten$4) not L37 not L40	(US-PGPUB; USPAT)	OR	ON	ON	2021/05/27 04:20 PM
L44	1	(15/573571).APP.	(US-PGPUB; USOCR)	OR	ON	ON	2021/05/27 04:35 PM
L45	2	("20130316209" | "20150050535").PN. OR ("10566598").URPN.	(US-PGPUB; USPAT; USOCR)	OR	ON	ON	2021/05/27 04:35 PM
L46	1	(13/984779).APP.	(USPAT; USOCR)	OR	ON	ON	2021/05/27 04:38 PM
L47	15	("20060240319" | "20070269711" | "20080241646" | "20090136835" | "20100124694" | "20100129719" | "20100310910" | "6019802" | "6465134" | "6589694" | "7261792" | "7642015" | "7935445" | "9577231" | "9655393").PN. OR ("10658633").URPN.	(US-PGPUB; USPAT; USOCR)	OR	ON	ON	2021/05/27 04:38 PM
L48	66	(h01m50/538.cpc. h01m10/0422.cpc. h01m50/531.cpc.) and (uncoated (free no remov$4 without) near3 active near3 material) same (plural$4 several) near4 (tab notch lead) and electrode with terminal	(US-PGPUB; USPAT)	OR	ON	ON	2021/05/28 09:49 AM
L49	27	(h01m50/$.cpc.) and (uncoated (free no remov$4 without) near3 active near3 material) same (plural$4 several) near4 (tab notch lead) and (electrode anode cathode positive negative) with terminal not L48	(US-PGPUB; USPAT)	OR	ON	ON	2021/05/28 09:49 AM

L50	26	(h01m50/$.cpc.) and (uncoated (free no remov$4 without) near3 active near3 material) near4 (edge top length) same (terminal lead tab connect$4) near3 (attach$4 add$4 fix$4 secur$4 append$4 join$4 fasten$4) not L48 not L49	(US-PGPUB; USPAT)	OR	ON	ON	2021/05/28 09:49 AM
L51	140	(h01m50/$.cpc.) and (uncoated (free no remov$4 without)) near4 (edge top length) same (terminal lead tab connect$4) near3 (attach$4 add$4 fix$4 secur$4 append$4 join$4 fasten$4) not L48 not L49 not L50	(US-PGPUB; USPAT)	OR	ON	ON	2021/05/28 09:49 AM
L52	21	(h01m50/$.cpc.) and (uncoated (free no remov$4 without)) near4 (edge top length) same (terminal lead tab connect$4) near3 (attach$4 add$4 fix$4 secur$4 append$4 join$4 fasten$4) not L48 not L49 not L50 and (wind$4 wound jelly$2roll) near4 (cell battery unit)	(US-PGPUB; USPAT)	OR	ON	ON	2021/05/28 09:59 AM
L53	274	(h01m50/$.cpc.) and (uncoated (free no remov$4 without)) near4 (edge top length) same (terminal lead tab connect$4) not L48 not L49 not L50 and (wind$4 wound jelly$2roll) near4 (cell battery unit) not L52	(US-PGPUB; USPAT)	OR	ON	ON	2021/05/28 10:19 AM
L54	74	(h01m50/$.cpc.) and (uncoated (free no remov$4 without)) near4 (edge top length) same (terminal lead tab connect$4) near4 (side end) not L48 not L49 not L50 and (wind$4 wound jelly$2roll) near4 (cell battery unit) not L52	(US-PGPUB; USPAT)	OR	ON	ON	2021/05/28 10:22 AM
L55	2	(h01m50/$.cpc.) and	(US-PGPUB; USPAT)	OR	ON	ON	2021/05/28

		(mea membrane near3 electrode near3 assembly) with (terminal lead tab connect$4) near4 (side end) not L48 not L49 not L50 and (wind$4 wound jelly$2roll) near4 (cell battery unit) not L52 not L54					10:40 AM
L56	1	"20130108903".pn.	(US-PGPUB; USPAT)	OR	ON	ON	2021/05/28 02:56 PM
L57	4	"20070196730".pn. "20100081052".pn. "20090029240".pn. "20110067227".pn.	(US-PGPUB; USPAT)	OR	ON	ON	2021/05/28 03:04 PM
L58	0	"20100081052".pn. and second near3 embodiment with (roll$4 coil$4)	(US-PGPUB; USPAT)	OR	ON	ON	2021/05/28 03:07 PM
L59	0	"20100081052".pn. and second near3 embodiment same2 (roll$4 coil$4)	(US-PGPUB; USPAT)	OR	ON	ON	2021/05/28 03:08 PM
L60	1	"20180145304".pn.	(US-PGPUB; USPAT)	OR	ON	ON	2021/05/28 05:13 PM
L61	2	"20100081052".pn. "20130108903".pn.	(US-PGPUB; USPAT)	OR	ON	ON	2021/09/17 03:17 PM
L62	68	(h01m50/538.cpc. h01m10/0422.cpc. h01m50/531.cpc.) and (uncoated (free no remov$4 without) near3 active near3 material) same (plural$4 several) near4 (tab notch lead) and electrode with terminal	(US-PGPUB; USPAT)	OR	ON	ON	2021/09/17 03:41 PM
L63	28	(h01m50/$.cpc.) and (uncoated (free no remov$4 without) near3 active near3 material) same (plural$4 several) near4 (tab notch lead) and (electrode anode cathode positive negative) with terminal not L62	(US-PGPUB; USPAT)	OR	ON	ON	2021/09/17 03:41 PM
L64	26	(h01m50/$.cpc.) and (uncoated (free no remov$4 without) near3 active near3 material) near4 (edge top length) same (terminal lead tab connect$4) near3	(US-PGPUB; USPAT)	OR	ON	ON	2021/09/17 03:41 PM

		(attach$4 add$4 fix$4 secur$4 append$4 join$4 fasten$4) not L62 not L63					
L65	22	(h01m50/$.cpc.) and (uncoated (free no remov$4 without)) near4 (edge top length) same (terminal lead tab connect$4) near3 (attach$4 add$4 fix$4 secur$4 append$4 join$4 fasten$4) not L62 not L63 not L64 and (wind$4 wound jelly$2roll) near4 (cell battery unit)	(US-PGPUB; USPAT)	OR	ON	ON	2021/09/17 03:41 PM
L66	77	(h01m50/$.cpc. h01m50/$.ipc.) and (uncoated (free no remov$4 without)) near4 (edge top length) same (terminal lead tab connect$4) near4 (side end) not L62 not L63 not L64 and (wind$4 wound jelly$2roll) near4 (cell battery unit) not L65	(US-PGPUB; USPAT; FPRS; EPO; JPO; DERWENT)	OR	ON	ON	2021/09/17 03:41 PM
L67	1	"20110067227".pn.	(US-PGPUB; USPAT)	OR	ON	ON	2021/09/17 03:50 PM
L68	68	(h01m50/538.cpc. h01m10/0422.cpc. h01m50/531.cpc.) and (uncoated (free no remov$4 without) near3 active near3 material) same (plural$4 several) near4 (tab notch lead) and electrode with terminal	(US-PGPUB; USPAT)	OR	ON	ON	2021/09/17 03:58 PM
L69	40	(h01m50/$.cpc. h01m$.ipc.) and (uncoated (free no remov$4 without) near3 active near3 material) same (plural$4 several) near4 (tab notch lead) and electrode with terminal not L68	(US-PGPUB; USPAT; FPRS; EPO; JPO; DERWENT)	OR	ON	ON	2021/09/17 03:58 PM
L70	3	"20100081052".pn. "20130108903".pn. "20180145304".pn.	(US-PGPUB; USPAT)	OR	ON	ON	2022/01/18 12:49 PM
L71	1	"20200295341".pn.	(US-PGPUB; USPAT)	OR	ON	ON	2022/02/08 09:51 AM

L72	59	("20010038945" | "20030035993" | "20030091893" | "20030175587" | "20030194601" | "20030211388" | "20040023108" | "20040121230" | "20040157115" | "20040157120" | "20040214076" | "20040237290" | "20040265683" | "20050255378" | "20060124973" | "20060172190" | "20060210857" | "20070117011" | "20090109099" | "3823040" | "4049888" | "4383013" | "4400415" | "4966822" | "5464705" | "5554459" | "5773164" | "5834133" | "5866274" | "5876237" | "6071638" | "6080506" | "6083639" | "6159253" | "6197074" | "6344292" | "6432574" | "6521374" | "6673128" | "6780303" | "6875540" | "6884541" | "7033697" | "7927732" | "8084158" | "RE38518").PN. OR ("8236441").URPN.	(US-PGPUB; USPAT; USOCR)	OR	ON	ON	2022/02/08 09:56 AM
L73	1	"20130252054".pn.	(US-PGPUB; USPAT)	OR	ON	ON	2022/03/03 10:11 AM
L74	28	(h01m50/$.cpc. h01m50/$.ipc.) and insulat$4 near4 (member plate collar) near4 (end top bottom) with (electrode negative positive cathode anode) near4 (tab lead) and cell with (wind$4 wound$4 roll$4 jelly near4 roll$4)	(US-PGPUB; USPAT; FPRS; EPO; JPO; DERWENT)	OR	ON	ON	2022/03/03 11:30 AM
L75	96	(h01m50/$.cpc. h01m50/$.ipc.) and insulat$4 near4 (member plate collar) with (electrode negative positive cathode anode) near4 (tab lead) with (cell unit mea membrane near3 assembly) and cell with	(US-PGPUB; USPAT; FPRS; EPO; JPO; DERWENT)	OR	ON	ON	2022/03/03 11:33 AM

		(wind$4 wound$4 roll$4 jelly near4 roll$4) not L74					
L76	19	("4271241" | "4822377").PN. OR ("5171647").URPN.	(US-PGPUB; USPAT; USOCR)	OR	ON	ON	2022/03/03 11:40 AM
L77	42	(h01m50/$.cpc. h01m50/$.ipc.) and insulat$4 near4 (member plate collar pad slab disc layer sheet panel) with (electrode negative positive cathode anode) near4 (tab lead) with (cell unit mea membrane near3 assembly) and cell with (wind$4 wound$4 roll$4 jelly near4 roll$4) not L74 not L75	(US-PGPUB; USPAT; FPRS; EPO; JPO; DERWENT)	OR	ON	ON	2022/03/03 11:43 AM
L78	32	("3262819" | "3415690" | "3861960" | "3986083" | "3994749" | "4271241" | "4523376").PN. OR ("4822377").URPN.	(US-PGPUB; USPAT; USOCR)	OR	ON	ON	2022/03/03 11:48 AM
L79	3	"4822377".pn. "20110067227".pn. "20130252054".pn.	(US-PGPUB; USPAT)	OR	ON	ON	2022/03/03 11:55 AM
L80	1	(13/861455).APP.	(USPAT; USOCR)	OR	ON	ON	2022/03/03 01:21 PM
L81	11	("20020192548" | "20030235736" | "20050277019" | "20060110658" | "20060147793" | "20070154797" | "20090169990" | "20090317707" | "20100124694" | "5580679" | "5662566").PN. OR ("9300004").URPN.	(US-PGPUB; USPAT; USOCR)	OR	ON	ON	2022/03/03 01:21 PM
L82	11	("20020192548" | "20030235736" | "20050277019" | "20060110658" | "20060147793" | "20070154797" | "20090169990" | "20090317707" | "20100124694" | "5580679" | "5662566").PN. OR ("9300004").URPN.	(US-PGPUB; USPAT; USOCR)	OR	ON	ON	2022/03/03 01:22 PM

L83	3	("2013/0252054").URPN.	(USPAT)	OR	ON	ON	2022/03/03 01:22 PM
L84	17	("20040029008" | "20060123609" | "20060194108" | "20090239133" | "20100124694" | "20100281685" | "20130252054" | "5250784" | "6337758" | "6534952" | "6746796" | "6967828" | "6995971" | "7875087" | "8974955").PN. OR ("9373865").URPN.	(US-PGPUB; USPAT; USOCR)	OR	ON	ON	2022/03/03 01:23 PM
L85	3	"4822377".pn. "20130108903".pn. "20130252054".pn.	(US-PGPUB; USPAT)	OR	ON	ON	2022/03/03 01:25 PM
L86	3	"4822377".pn. "20110067227".pn. "20130108903".pn.	(US-PGPUB; USPAT)	OR	ON	ON	2022/03/03 01:25 PM
L87	1	"20110067227".pn. and tab near3 group with (plural$4 number additional)	(US-PGPUB; USPAT)	OR	ON	ON	2022/03/03 01:33 PM
L88	1	"20130108903".pn. and electrode near3 tab with (across plural$4)	(US-PGPUB; USPAT)	OR	ON	ON	2022/03/03 01:37 PM
L89	1	"20200295341".pn. and outer near4 portion with end with electrode	(US-PGPUB; USPAT)	OR	ON	ON	2022/03/03 01:41 PM
L90	1	"20130252054".pn. and number near4 (tab winding "602" "604")	(US-PGPUB; USPAT)	OR	ON	ON	2022/03/03 01:47 PM
L91	3	"20110067227".pn. "20130252054".pn. "4822377".pn.	(US-PGPUB; USPAT)	OR	ON	ON	2022/08/25 04:44 PM
L92	48	((US-20130108903-A1 OR US-20150072204-A1 OR US-20180026295-A1 OR US-20100081052-A1 OR US-20070117011-A1 OR US-20030211388-A1 OR US-20010038945-A1 OR US-20090029240-A1 OR US-20200343520-A1 OR US-20110151295-A1 OR US-20210005936-A1 OR US-20180145304-A1 OR US-20080026293-A1 OR US-20100124694-	(US-PGPUB; USPAT; USOCR; FIT (AU, AP, AT, BE, BG, BR, BY, CA, CH, CN, CS, CU, CZ, DD, DE, DK, EA, EE, EP, ES, FI, FR, GB, HR, HU, ID, IE, IL, IS, IT, JP, KR, LT, LU, LV, MA, OA, RU, SU, WO, MC, MD, MY, NL, NO, NZ, PH, PL, PT, RO, RS, SE, SG, SI, SK, TH, TN, TR, TW, UA, VN); FPRS; EPO; JPO; DERWENT; IBM_TDB)	OR	ON	ON	2022/08/25 04:45 PM

		A1 OR US-20160351966-A1 OR US-20110067227-A1 OR US-20070196730-A1 OR US-20010023038-A1 OR US-20160351940-A1 OR US-20130252054-A1 OR US-20100310926-A1 OR US-20190027789-A1 OR US-20170125764-A1 OR US-20110008670-A1 OR US-20190379028-A1 OR US-20050225926-A1 OR US-20060024572-A1 OR US-20200295341-A1).did. AND PGPB.dbnm.) OR ((US-8236441-B2 OR US-6521374-B1 OR US-6432574-B1 OR US-8871373-B2 OR US-5849431-A OR US-9640833-B2 OR US-6071638-A OR US-7935445-B2 OR US-5171647-A OR US-4822377-A OR US-8310809-B2 OR US-8628877-B2 OR US-6456484-B1).did. AND USPT.dbnm.) OR ((WO-2017047278-A1 OR WO-2012051402-A1 OR EP-2325927-A1 OR JP-3754220-B2).did. AND FPRS.dbnm.) OR ((JP-2009289714-A OR JP-2013187077-A).did. AND JPAB.dbnm.) OR ((US-3761314-A).did. AND USOC.dbnm.)					
L93	12	("20150037638"|"20110067227"|"20140147714"|"20070269685"|"20120009450"|"20050221178"|"20110081574"|"20110262779"|"20160351940"|"20100190056"|"20160218343"|"20130252054").PN.	(US-PGPUB; USPAT)	OR	ON	ON	2022/08/25 04:49 PM
L94	15	("2007/0269685").urpn. AND (PGPB | USPT |	(US-PGPUB; USPAT; USOCR)	OR	ON	ON	2022/08/25 04:52 PM

		USOC).dbnm.					
L95	36	(Artificial Intelligence) More like doc: US-20070269685-A1 Text: (US-8084158-B2 OR EP-2181482-A1 OR WO-2009015282-A1 OR US-20090029240-A1 OR US-8236441-B2 OR EP-2181482-B1 OR KR-20100058501-A OR JP-2010534916-A OR JP-5378377-B2 OR KR-101566561-B1 OR EP-2429010-B1 OR EP-2429010-A1 OR US-7927732-B2 OR JP-2009507345-A OR KR-101304125-B1 OR US-4322484-A OR WO-2007028152-A2 OR EP-1946393-A2 OR US-20070117011-A1 OR KR-20080050452-A).did.	(US-PGPUB; USPAT; USOCR; FIT (AU, AP, AT, BE, BG, BR, BY, CA, CH, CN, CS, CU, CZ, DD, DE, DK, EA, EE, EP, ES, FI, FR, GB, HR, HU, ID, IE, IL, IS, IT, JP, KR, LT, LU, LV, MA, OA, RU, SU, WO, MC, MD, MY, NL, NO, NZ, PH, PL, PT, RO, RS, SE, SG, SI, SK, TH, TN, TR, TW, UA, VN); FPRS; EPO; JPO; DERWENT; IBM_TDB)	OR	ON	ON	2022/08/25 04:54 PM
L96	53	("3823040" | "4383013" | "4400415" | "4966822" | "5464705" | "5554459" | "5773164" | "5834133" | "5866274" | "5876237" | "6071638" | "6080506" | "6083639" | "6159253" | "6197074" | "6344292" | "6432574" | "6521374" | "6673128" | "RE38518" | "6780303" | "6875540" | "6884541" | "7033697" | "7927732" | "20010038945" | "20030035993" | "20030091893" | "20030175587" | "20030194601" | "20030211388" | "20040023108" | "20040121230" | "20040157115" | "20040157120" | "20040214076" | "20040237290" | "20040265683" | "20050255378" | "20060124973" | "20060172190" | "20070117011" | "20090109099").pn. OR	(US-PGPUB; USPAT; USOCR)	OR	ON	ON	2022/08/25 04:54 PM

		("8084158").urpn. AND (PGPB | USPT | USOC).dbnm.					
L97	33	(h01m50/$.cpc. h01m10/$.cpc. h01m50/$.ipc. h01m10/$.ipc.) AND (plural$4 several) near4 (tab notch lead terminal) AND (center middle central inner) near4 (tab notch lead terminal) WITH (insulat$4)	(FPRS; EPO; JPO; DERWENT)	OR	ON	ON	2022/08/25 04:59 PM
L98	1	"20190348703".pn.	(US-PGPUB; USPAT)	OR	ON	ON	2022/08/25 05:01 PM
L99	1	"11152638".pn.	(US-PGPUB; USPAT)	OR	ON	ON	2022/08/25 05:02 PM
L100	11	("9299967" | "20020068217" | "20090208825" | "20110262779" | "20120009450" | "20140186670" | "20140199571" | "20170084901" | "20170092926" | "20170250437" | "20170346064").pn. OR ("11152638").urpn. AND (PGPB | USPT | USOC).dbnm.	(US-PGPUB; USPAT; USOCR)	OR	ON	ON	2022/08/25 05:02 PM
L101	1	"9012053".pn.	(US-PGPUB; USPAT)	OR	ON	ON	2022/08/25 08:16 PM
L102	19	("2291110" | "3507703" | "3607417" | "4816352" | "7060387" | "7276313" | "20020061435" | "20040161662" | "20040202924" | "20050142436" | "20060240319" | "20100178559").pn. OR ("9012053").urpn. AND (PGPB | USPT | USOC).dbnm.	(US-PGPUB; USPAT; USOCR)	OR	ON	ON	2022/08/25 08:16 PM
L103	13	("2012/0009450").urpn. AND (PGPB | USPT | USOC).dbnm.	(US-PGPUB; USPAT; USOCR)	OR	ON	ON	2022/08/25 08:23 PM
L104	87	(h01m50/$.cpc. h01m10/$.cpc. h01m50/$.ipc. h01m10/$.ipc.) AND (plural$4 several multipl%5) near4 (tab	(FPRS; EPO; JPO; DERWENT)	OR	ON	ON	2022/08/25 08:31 PM

		notch lead terminal) AND (center middle central inner) near4 (tab notch lead terminal) WITH (insulat$4 plate cover)					
L105	668	(h01m50/$.cpc. h01m10/$.cpc. h01m50/$.ipc. h01m10/$.ipc.) AND (plural$4 several multipl%5) near4 (tab notch lead terminal) AND (center middle central inner) near4 (tab notch lead terminal) WITH (insulat$4 plate cover) NOT L97	(US-PGPUB; USPAT; FPRS; EPO; JPO; DERWENT)	OR	ON	ON	2022/08/25 08:32 PM
L106	0	(h01m50/$.cpc. h01m10/$.cpc. h01m50/$.ipc. h01m10/$.ipc.) AND (plural$4 several multipl%5) near4 (tab notch lead terminal) AND (center middle central inner) near4 (tab notch lead terminal) WITH (insulat$4) near4 (plate cover layer) NOT L97	(US-PGPUB; USPAT; FPRS; EPO; JPO; DERWENT)	OR	ON	ON	2022/08/25 08:32 PM
L107	131	(h01m50/$.cpc. h01m10/$.cpc. h01m50/$.ipc. h01m10/$.ipc.) AND (plural$4 several multipl%5) near4 (tab notch lead terminal) AND (center middle central inner) near4 (tab notch lead terminal) WITH (insulat$4) near4 (plate cover layer)	(US-PGPUB; USPAT; FPRS; EPO; JPO; DERWENT)	OR	ON	ON	2022/08/25 08:32 PM
L108	0	(h01m50/$.cpc. h01m10/$.cpc. h01m50/$.ipc. h01m10/$.ipc.) AND (plural$4 several) near4 (tab notch lead terminal) AND (center middle central inner) near4 (tab notch lead terminal) WITH (insulat$4) NOT L97	(US-PGPUB; USPAT)	OR	ON	ON	2022/08/25 08:32 PM
L109	231	(h01m50/$.cpc. h01m10/$.cpc.	(US-PGPUB; USPAT; FPRS; EPO; JPO;	OR	ON	ON	2022/08/25 08:37 PM

		h01m50/$.ipc. h01m10/$.ipc.) AND (plural$4 several multipl%5) near4 (tab notch lead terminal) AND (center middle central inner) near4 (tab notch lead terminal) WITH (insulat$4) NOT L107	DERWENT)				
L110	174	(h01m50/$.cpc. h01m10/$.cpc. h01m50/$.ipc. h01m10/$.ipc.) AND (plural$4 several multipl%5) near4 (tab notch lead terminal) AND (center middle central inner) near4 (tab notch lead terminal) WITH (insulat$4) NOT L107 AND (wound wind$4 roll$4)	(US-PGPUB; USPAT; FPRS; EPO; JPO; DERWENT)	OR	ON	ON	2022/08/25 08:37 PM
L111	1	("2014/0050956").urpn. AND (PGPB | USPT | USOC).dbnm.	(US-PGPUB; USPAT; USOCR)	OR	ON	ON	2022/08/25 08:42 PM
L112	15	("20020061435" | "20060127751" | "20090239133" | "20100190056" | "20110067227" | "20110104541" | "20110151295" | "20120279053" | "20140050956" | "20160164133" | "20170250437" | "20170365839" | "20180026295" | "20180040918" | "20190379028").pn. OR ("10700384").urpn. AND (PGPB | USPT | USOC).dbnm.	(US-PGPUB; USPAT; USOCR)	OR	ON	ON	2022/08/25 08:43 PM
L113	43	(Artificial Intelligence) More like doc: US-20140050956-A1 Text: (KR-20150030537-A OR TW-201407859-A OR JP-3187576-U OR CN-114050324-A OR KR-20180048419-A OR KR-102103900-B1 OR US-10700384-B2 OR EP-3514876-A1 OR	(US-PGPUB; USPAT; USOCR; FIT (AU, AP, AT, BE, BG, BR, BY, CA, CH, CN, CS, CU, CZ, DD, DE, DK, EA, EE, EP, ES, FI, FR, GB, HR, HU, ID, IE, IL, IS, IT, JP, KR, LT, LU, LV, MA, OA, RU, SU, WO, MC, MD, MY, NL, NO, NZ, PH, PL, PT, RO, RS, SE, SG, SI, SK,	OR	ON	ON	2022/08/25 08:46 PM

		US-20190027789-A1 OR CN-103594736-A OR CN-108496269-B OR TW-201244225-A OR US-20040191625-A1 OR CN-102760905-A OR EP-3136494-A1 OR KR-20150122340-A OR CN-101714651-B OR CN-108496269-A OR CN-101714651-A OR CN-202308131-U).did.	TH, TN, TR, TW, UA, VN); FPRS; EPO; JPO; DERWENT; IBM_TDB)				
L114	0	20150037638,pn.	(US-PGPUB; USPAT)	OR	ON	ON	2022/08/25 08:48 PM
L115	1	"20150037638".pn.	(US-PGPUB; USPAT)	OR	ON	ON	2022/08/25 08:48 PM
L116	53	((US-20130108903-A1 OR US-20150072204-A1 OR US-20180026295-A1 OR US-20100081052-A1 OR US-20070117011-A1 OR US-20030211388-A1 OR US-20010038945-A1 OR US-20090029240-A1 OR US-20200343520-A1 OR US-20110151295-A1 OR US-20210005936-A1 OR US-20180145304-A1 OR US-20080026293-A1 OR US-20100124694-A1 OR US-20160351966-A1 OR US-20110067227-A1 OR US-20070196730-A1 OR US-20010023038-A1 OR US-20160351940-A1 OR US-20130252054-A1 OR US-20100310926-A1 OR US-20190027789-A1 OR US-20170125764-A1 OR US-20110008670-A1 OR US-20190379028-A1 OR US-20050225926-A1 OR US-20060024572-A1 OR US-20150037638-A1 OR US-20190348703-A1 OR US-20120009450-A1 OR	(US-PGPUB; USPAT; USOCR; FIT (AU, AP, AT, BE, BG, BR, BY, CA, CH, CN, CS, CU, CZ, DD, DE, DK, EA, EE, EP, ES, FI, FR, GB, HR, HU, ID, IE, IL, IS, IT, JP, KR, LT, LU, LV, MA, OA, RU, SU, WO, MC, MD, MY, NL, NO, NZ, PH, PL, PT, RO, RS, SE, SG, SI, SK, TH, TN, TR, TW, UA, VN); FPRS; EPO; JPO; DERWENT; IBM_TDB)	OR	ON	ON	2022/08/25 08:50 PM

		US-20140050956-A1 OR US-20200295341-A1).did. AND PGPB.dbnm.) OR ((US-8236441-B2 OR US-6521374-B1 OR US-6432574-B1 OR US-8871373-B2 OR US-5849431-A OR US-9640833-B2 OR US-6071638-A OR US-7935445-B2 OR US-5171647-A OR US-4822377-A OR US-8310809-B2 OR US-8628877-B2 OR US-6456484-B1).did. AND USPT.dbnm.) OR ((WO-2017047278-A1 OR WO-2012051402-A1 OR EP-2325927-A1 OR JP-3754220-B2 OR CN-114128033-A).did. AND FPRS.dbnm.) OR ((JP-2009289714-A OR JP-2013187077-A).did. AND JPAB.dbnm.) OR ((US-3761314-A).did. AND USOC.dbnm.)					
L117	2	"20120009450".pn. "20130108903".pn.	(US-PGPUB; USPAT)	OR	ON	ON	2022/08/25 09:02 PM
L119	1	"3234421".pn.	(US-PGPUB; USPAT)	OR	ON	ON	2022/08/30 02:52 PM
L120	6	waymouth-j$.inv. AND koury-f$.inv.	(US-PGPUB; USPAT)	OR	ON	ON	2022/08/30 02:53 PM
L121	2	"20140050956".pn. "20130108903".pn.	(US-PGPUB; USPAT)	OR	ON	ON	2022/09/02 03:30 PM
L122	12	("20150037638"|"20110067227"|"20140147714"|"20070269685"|"20120009450"|"20050221178"|"20110081574"|"20110262779"|"20160351940"|"20100190056"|"20160218343"|"20130252054").PN.	(US-PGPUB; USPAT)	OR	ON	ON	2022/09/06 01:20 PM
L123	6	"20140050956".pn. "20130108903".pn. "20120009450".pn. "20110067227".pn. "20130252054".pn. "4822377".pn.	(US-PGPUB; USPAT)	OR	ON	ON	2022/09/07 02:36 PM
L124	2	("20060127774"|"20100190056").PN.	(US-PGPUB; USPAT)	OR	ON	ON	2022/12/16 12:17 PM
L125	183	(h01m50/$.cpc.	(US-PGPUB; USPAT;	OR	ON	ON	2022/12/16

		h01m10/$.cpc. h01m50/$.ipc. h01m10/$.ipc.) AND (plural$4 several multipl%5) near4 (tab notch lead terminal) AND (center middle central inner) near4 (tab notch lead terminal) WITH (insulat$4) NOT L107 AND (wound wind$4 roll$4)	FPRS; EPO; JPO; DERWENT)				12:40 PM
L126	197	(h01m50/$.cpc. h01m10/$.cpc. h01m50/$.ipc. h01m10/$.ipc.) AND (plural$4 several multipl$5) near4 (tab notch lead terminal) AND (center middle central inner) near4 (tab notch lead terminal) WITH (insulat$4) NOT L107 AND (wound wind$4 roll$4)	(US-PGPUB; USPAT; FPRS; EPO; JPO; DERWENT)	OR	ON	ON	2022/12/16 01:01 PM
L127	38	(h01m50/$.cpc. h01m10/$.cpc. h01m50/$.ipc. h01m10/$.ipc.) AND (plural$4 several multipl$5) near4 (tab notch lead terminal) AND (center middle central inner) near4 (tab notch lead terminal) WITH (insulat$4) NOT L107 AND (wound wind$4 roll$4) AND (tan lead terminal) WITH (overlap$4 overl$4 shingl$4 superimpos$4)	(US-PGPUB; USPAT; FPRS; EPO; JPO; DERWENT)	OR	ON	ON	2022/12/16 01:03 PM
L128	57	(h01m50/$.cpc. h01m10/$.cpc. h01m50/$.ipc. h01m10/$.ipc.) AND (plural$4 several multipl$5) near4 (tab notch lead terminal) AND (center middle central inner) near4 (tab notch lead terminal) WITH (insulat$4) NOT L107 AND (wound wind$4 roll$4) AND (tab lead terminal) WITH (overlap$4 overl$4 shingl$4 superimpos$4)	(US-PGPUB; USPAT; FPRS; EPO; JPO; DERWENT)	OR	ON	ON	2022/12/16 01:03 PM

L129	1	"20160351966".pn.	(US-PGPUB; USPAT)	OR	ON	ON	2022/12/16 01:09 PM
L130	100	(h01m50/$.cpc. h01m10/$.cpc. h01m50/$.ipc. h01m10/$.ipc.) AND (plural$4 several multipl%5) near4 (tab notch lead terminal) AND (center middle central inner) near4 (tab notch lead terminal) WITH (insulat$4 plate cover)	(FPRS; EPO; JPO; DERWENT)	OR	ON	ON	2022/12/16 01:42 PM
L131	105	(h01m50/$.cpc. h01m10/$.cpc. h01m50/$.ipc. h01m10/$.ipc.) AND (plural$4 several multipl$5) near4 (tab notch lead terminal) AND (center middle central inner) near4 (tab notch lead terminal) WITH (insulat$4 plate cover)	(FPRS; EPO; JPO; DERWENT)	OR	ON	ON	2022/12/16 01:43 PM
L132	0	(h01m50/538,536.cpc. h01m10/1422,0431.cpc.) AND (wound roll$4 cylind$5) SAME tab WITH ben$4 same2 tab WITH (distribut$4 dispers$4 allocat$4 allot$4 apportion$4 ration$4) near4 (equal$4 axis around about)	(US-PGPUB; USPAT)	OR	ON	ON	2022/12/16 02:07 PM
L133	0	(h01m50/$.cpc. h01m10/$.cpc.) AND (wound roll$4 cylind$5) SAME tab WITH ben$4 same2 tab WITH (distribut$4 dispers$4 allocat$4 allot$4 apportion$4 ration$4) near4 (equal$4 axis around about)	(US-PGPUB; USPAT)	OR	ON	ON	2022/12/16 02:07 PM
L134	0	(h01m50/$.cpc. h01m10/$.cpc.) AND (wound roll$4 cylind$5) SAME tab WITH ben$4 same2 tab WITH (distribut$4 dispers$4 allocat$4 allot$4 apportion$4 ration$4) .clm.	(US-PGPUB; USPAT)	OR	ON	ON	2022/12/16 02:08 PM

L135	86	(h01m50/$.cpc. h01m10/$.cpc.) AND (wound roll$4 cylind$5) SAME tab WITH ben$4 .clm.	(US-PGPUB; USPAT)	OR	ON	ON	2022/12/16 02:08 PM
L136	73423	(h01m50/$.cpc. h01m10/$.cpc.) AND (wound roll$4 cylind$5) tab WITH (distribut$4 dispers$4 allocat$4 allot$4 apportion$4 ration$4) .clm.	(US-PGPUB; USPAT)	OR	ON	ON	2022/12/16 02:08 PM
L137	168	(h01m50/$.cpc. h01m10/$.cpc.) AND (wound roll$4 cylind$5) same2 (tab electrode) WITH (distribut$4 dispers$4 allocat$4 allot$4 apportion$4 ration$4) .clm.	(US-PGPUB; USPAT)	OR	ON	ON	2022/12/16 02:08 PM
L138	27	(h01m50/$.cpc. h01m10/$.cpc.) AND (wound roll$4 cylind$5) same2 (tab electrode) WITH (distribut$4 dispers$4 allocat$4 allot$4 apportion$4 ration$4) same3 (tab electrode) WITH (overlap$4 laminat$4).clm.	(US-PGPUB; USPAT)	OR	ON	ON	2022/12/16 02:09 PM
L139	1101	(h01m50/$.cpc. h01m10/$.cpc.) AND (wound roll$4 cylind$5) same2 (tab electrode) WITH (overlap$4 laminat$4).clm. NOT L138	(US-PGPUB; USPAT)	OR	ON	ON	2022/12/16 02:11 PM
L140	104	(h01m50/$.cpc. h01m10/$.cpc.) AND (wound roll$4 cylind$5) same2 (mutipl$4 plural$4) near3 (tab electrode) WITH (overlap$4 laminat$4).clm. NOT L138	(US-PGPUB; USPAT)	OR	ON	ON	2022/12/16 02:11 PM
L141	56	(h01m50/$.cpc. h01m10/$.cpc.) AND (wound roll$4 cylind$5) same2 (mutipl$4 plural$4) near3 (tab electrode) near3 (overlap$4 laminat$4).clm. NOT L138	(US-PGPUB; USPAT)	OR	ON	ON	2022/12/16 02:11 PM

L142	1	"11652232".pn.	(US-PGPUB; USPAT)	OR	ON	ON	2023/11/03 01:28 PM
L143	1	"20230246222".pn.	(US-PGPUB; USPAT)	OR	ON	ON	2023/11/03 01:33 PM
L144	4	"20110067227".pn. "20120009450".pn. "20130108903".pn. "20130252054".pn.	(US-PGPUB; USPAT)	OR	ON	ON	2023/11/03 02:46 PM
L145	63	(h01m50/$.cpc. h01m10/$.cpc.) AND (wound roll$4 cylind$5) same2 (mutipl$4 plural$4) near3 (tab electrode) near3 (overlap$4 laminat$4).clm. NOT L138	(US-PGPUB; USPAT)	OR	ON	ON	2023/11/03 02:54 PM
L146	2	L142 L143	(US-PGPUB; USPAT)	OR	ON	ON	2023/11/03 03:34 PM
L147	22	("4822377" | "6569565" | "20010023038" | "20050003264" | "20050287428" | "20060127774" | "20070196730" | "20100081052" | "20100190056" | "20100310926" | "20110067227" | "20110293977" | "20120009450" | "20120208055" | "20130108903" | "20130252054" | "20130344364" | "20140050956" | "20150295270" | "20160351966" | "20180145304" | "20190379028").pn. AND (PGPB | USPT | USOC).dbnm.	(US-PGPUB; USPAT; USOCR)	OR	ON	ON	2023/11/03 04:02 PM
L148	32	(Artificial Intelligence) More like doc: US-11652232-B2 Text: (US-2020295341-A1 OR US-2023246222-A1 OR EP-3611781-A1 OR WO-2018190691-A1 OR KR-20180116156-A OR KR-102126970-B1 OR JP-7341585-B2 OR JP-2020505717-A OR JP-2021177490-A OR US-11349182-B2 OR	(US-PGPUB; USPAT; USOCR; FIT (AU, AP, AT, BE, BG, BR, BY, CA, CH, CN, CS, CU, CZ, DD, DE, DK, EA, EE, EP, ES, FI, FR, GB, HR, HU, ID, IE, IL, IS, IT, JP, KR, LT, LU, LV, MA, OA, RU, SU, WO, MC, MD, MY, NL, NO, NZ, PH, PL, PT, RO, RS, SE, SG, SI, SK, TH, TN, TR, TW, UA, VN); FPRS; EPO;	OR	ON	ON	2023/11/03 04:02 PM

		CN-110476273-B OR US-2019379028-A1 OR EP-3567666-B1 OR CN-110476273-A OR KR-101137372-B1 OR KR-20140140405-A OR KR-101584298-B1 OR JP-5194072-B2 OR KR-102226916-B1 OR CN-116544526-A).did.	JPO; DERWENT; IBM_TDB)				
L149	2	(h01m50/538,536.cpc. h01m10/1422,0431.cpc.) AND (wound roll$4 cylind$5) SAME tab near3 notch$4 WITH (distribut$4 dispers$4 allocat$4 allot$4 apportion$4 ration$4) near4 (equal$4 axis around about)	(US-PGPUB; USPAT)	OR	ON	ON	2024/02/16 04:14 PM
L150	2	(h01m50/538,536.cpc. h01m10/1422,0431.cpc.) AND (wound roll$4 cylind$5) SAME tab near3 notch$4 WITH (distribut$4 dispers$4 allocat$4 allot$4 apportion$4 ration$4) near4 (equal$4 axis around about).clm.	(US-PGPUB; USPAT)	OR	ON	ON	2024/02/16 04:14 PM
L151	2	(h01m50/$.cpc. h01m10/$.cpc.) AND (wound roll$4 cylind$5) SAME tab near3 notch$4 WITH (distribut$4 dispers$4 allocat$4 allot$4 apportion$4 ration$4) near4 (equal$4 axis around about).clm.	(US-PGPUB; USPAT)	OR	ON	ON	2024/02/16 04:20 PM
L152	67	(h01m50/$.cpc. h01m10/$.cpc.) AND (wound roll$4 cylind$5) same2 (mutipl$4 plural$4) near3 (tab electrode) near3 (overlap$4 laminat$4).clm. NOT L138	(US-PGPUB; USPAT)	OR	ON	ON	2024/02/16 04:20 PM
L153	4	"3761314".pn. "20050287428".pn. "20060024572".pn. "20050287432".pn.	(US-PGPUB; USPAT)	OR	ON	ON	2024/03/06 08:44 AM
L154	54	((US-20130108903-A1 OR US-20150072204-A1 OR US-	(US-PGPUB; USPAT; USOCR; FIT (AU, AP, AT, BE, BG, BR, BY,	OR	ON	ON	2024/04/17 10:11 AM

		20180026295-A1 OR US-20100081052-A1 OR US-20070117011-A1 OR US-20030211388-A1 OR US-20010038945-A1 OR US-20090029240-A1 OR US-20160351966-A1 OR US-20110151295-A1 OR US-20210005936-A1 OR US-20180145304-A1 OR US-20080026293-A1 OR US-20100124694-A1 OR US-20190379028-A1 OR US-20110067227-A1 OR US-20070196730-A1 OR US-20010023038-A1 OR US-20160351940-A1 OR US-20130252054-A1 OR US-20100310926-A1 OR US-20190027789-A1 OR US-20170125764-A1 OR US-20110008670-A1 OR US-20050225926-A1 OR US-20060024572-A1 OR US-20200343520-A1 OR US-20150037638-A1 OR US-20190348703-A1 OR US-20120009450-A1 OR US-20140050956-A1 OR US-20200295341-A1 OR US-20230246222-A1).did. AND PGPB.dbnm.) OR ((US-8236441-B2 OR US-6521374-B1 OR US-6432574-B1 OR US-8871373-B2 OR US-5849431-A OR US-9640833-B2 OR US-6071638-A OR US-7935445-B2 OR US-5171647-A OR US-4822377-A OR US-8310809-B2 OR US-8628877-B2 OR US-6456484-B1 OR US-11652232-B2).did. AND USPT.dbnm.) OR ((US-3761314-A).did. AND	CA, CH, CN, CS, CU, CZ, DD, DE, DK, EA, EE, EP, ES, FI, FR, GB, HR, HU, ID, IE, IL, IS, IT, JP, KR, LT, LU, LV, MA, OA, RU, SU, WO, MC, MD, MY, NL, NO, NZ, PH, PL, PT, RO, RS, SE, SG, SI, SK, TH, TN, TR, TW, UA, VN); FPRS; EPO; JPO; DERWENT; IBM_TDB)				

		USOC.dbnm.) OR ((WO-2012051402-A1 OR WO-2017047278-A1 OR EP-2325927-A1 OR JP-3754220-B2).did. AND FPRS.dbnm.) OR ((JP-2009289714-A OR JP-2013187077-A).did. AND JPAB.dbnm.)					
L155	2	"11652232".pn. "11973177".pn.	(US-PGPUB; USPAT)	OR	ON	ON	2024/08/22 09:49 PM
L156	1	"20240243335".pn.	(US-PGPUB; USPAT)	OR	ON	ON	2024/08/22 09:51 PM
L157	1	"20240243336".pn.	(US-PGPUB; USPAT)	OR	ON	ON	2024/08/22 09:52 PM
L158	4	L155 L156 L157	(US-PGPUB; USPAT)	OR	ON	ON	2024/08/22 09:53 PM
L159	0	L158 AND second near3 non$2coating	(US-PGPUB; USPAT)	OR	ON	ON	2024/08/22 09:53 PM
L160	0	L158 AND second WITH non$2coating	(US-PGPUB; USPAT)	OR	ON	ON	2024/08/22 09:54 PM
L161	4	L158 AND non$2coating	(US-PGPUB; USPAT)	OR	ON	ON	2024/08/22 09:54 PM
L162	4	L158 AND bent near4 electrical$4 near4 connect$4	(US-PGPUB; USPAT)	OR	ON	ON	2024/08/22 09:56 PM
L163	1	L158 AND spac$4 near2 apart	(US-PGPUB; USPAT)	OR	ON	ON	2024/08/22 09:58 PM
L164	4	L158 AND (spac$4 apart)	(US-PGPUB; USPAT)	OR	ON	ON	2024/08/22 09:58 PM
L165	57	((US-20130108903-A1 OR US-20150072204-A1 OR US-20180026295-A1 OR US-20100081052-A1 OR US-20070117011-A1 OR US-20030211388-A1 OR US-20010038945-A1 OR US-20090029240-A1 OR US-20160351966-A1 OR US-20110151295-A1 OR US-20210005936-A1 OR US-20180145304-A1 OR US-20080026293-A1 OR US-20100124694-A1 OR US-20190379028-A1 OR US-20110067227-A1 OR US-20070196730-A1 OR US-	(US-PGPUB; USPAT; USOCR; FIT (AU, AP, AT, BE, BG, BR, BY, CA, CH, CN, CS, CU, CZ, DD, DE, DK, EA, EE, EP, ES, FI, FR, GB, HR, HU, ID, IE, IL, IS, IT, JP, KR, LT, LU, LV, MA, OA, RU, SU, WO, MC, MD, MY, NL, NO, NZ, PH, PL, PT, RO, RS, SE, SG, SI, SK, TH, TN, TR, TW, UA, VN); FPRS; EPO; JPO; DERWENT; IBM_TDB)	OR	ON	ON	2024/08/22 09:59 PM

		20010023038-A1 OR US-20160351940-A1 OR US-20130252054-A1 OR US-20100310926-A1 OR US-20190027789-A1 OR US-20170125764-A1 OR US-20110008670-A1 OR US-20050225926-A1 OR US-20060024572-A1 OR US-20200343520-A1 OR US-20150037638-A1 OR US-20190348703-A1 OR US-20120009450-A1 OR US-20140050956-A1 OR US-20200295341-A1 OR US-20230246222-A1 OR US-20240243335-A1 OR US-20240243336-A1).did. AND PGPB.dbnm.) OR ((US-8236441-B2 OR US-6521374-B1 OR US-6432574-B1 OR US-8871373-B2 OR US-5849431-A OR US-9640833-B2 OR US-6071638-A OR US-7935445-B2 OR US-5171647-A OR US-4822377-A OR US-8310809-B2 OR US-8628877-B2 OR US-6456484-B1 OR US-11652232-B2 OR US-11973177-B2).did. AND USPT.dbnm.) OR ((US-3761314-A).did. AND USOC.dbnm.) OR ((WO-2012051402-A1 OR WO-2017047278-A1 OR EP-2325927-A1 OR JP-3754220-B2).did. AND FPRS.dbnm.) OR ((JP-2009289714-A OR JP-2013187077-A).did. AND JPAB.dbnm.)					
L166	4	"3761314".pn. "20050287428".pn. "20060024572".pn. "20050287432".pn.	(US-PGPUB; USPAT)	OR	ON	ON	2024/08/22 10:08 PM
L167	75	(h01m50/$.cpc.	(US-PGPUB; USPAT)	OR	ON	ON	2024/08/22

		h01m10/$.cpc.) AND (wound roll$4 cylind$5) same2 (mutipl$4 plural$4) near3 (tab electrode) near3 (overlap$4 laminat$4).clm. NOT L138					10:08 PM
L168	1	"11973177".pn.	(US-PGPUB; USPAT)	OR	ON	ON	2024/10/08 09:39 AM
L169	2	"20240243335".pn. "20240243336".pn.	(US-PGPUB; USPAT)	OR	ON	ON	2024/10/08 09:41 AM
L170	2	"11973177".pn. "11652232".pn.	(US-PGPUB; USPAT)	OR	ON	ON	2024/10/08 09:58 AM
L171	24	(h01m10/$.cpc. h01m50/$.cpc. h01m10/$.ipc. h01m50/$.ipc.) AND (kim-j$.inv. kim-h$.inv. kim-s$.inv.) AND (electrode cathode anode) WITH (notch$4) near4 (overlap$4 plural$4)	(US-PGPUB; USPAT; FPRS; EPO; JPO; DERWENT)	OR	ON	ON	2024/10/08 12:28 PM
L172	2	L170 AND overlap$4.clm.	(US-PGPUB; USPAT)	OR	ON	ON	2024/10/08 02:44 PM
L173	1	"20210391579".pn.	(US-PGPUB; USPAT)	OR	ON	ON	2024/10/09 02:50 PM
L174	3	"20240243335".pn. "20050277022".pn. "20050142436".pn.	(US-PGPUB; USPAT)	OR	ON	ON	2024/12/06 10:43 AM
L175	27	(h01m10/$.cpc. h01m50/$.cpc. h01m10/$.ipc. h01m50/$.ipc.) AND (kim-j$.inv. kim-h$.inv. kim-s$.inv.) AND (electrode cathode anode) WITH (notch$4) near4 (overlap$4 plural$4)	(US-PGPUB; USPAT; FPRS; EPO; JPO; DERWENT)	OR	ON	ON	2024/12/06 11:08 AM
L176	75	(h01m50/$.cpc. h01m10/$.cpc.) AND (wound roll$4 cylind$5) same2 (mutipl$4 plural$4) near3 (tab electrode) near3 (overlap$4 laminat$4).clm. NOT L138	(US-PGPUB; USPAT)	OR	ON	ON	2024/12/06 11:08 AM
L177	2	"20050142436".pn. "20050277022".pn.	(US-PGPUB; USPAT)	OR	ON	ON	2025/02/06 09:36 AM

There are no Interference searches to show.

US012341147B2

(12) **United States Patent**
Kim et al.

(10) **Patent No.: US 12,341,147 B2**
(45) **Date of Patent: *Jun. 24, 2025**

(54) **SECONDARY BATTERY AND METHOD FOR MANUFACTURING THE SAME**

(71) Applicant: **LG Energy Solution, Ltd.**, Seoul (KR)

(72) Inventors: **Jae Woong Kim**, Daejeon (KR); **Hyoung Kwon Kim**, Daejeon (KR); **Sang Uck Kim**, Daejeon (KR)

(73) Assignee: **LG Energy Solution, Ltd.**, Seoul (KR)

(*) Notice: Subject to any disclaimer, the term of this patent is extended or adjusted under 35 U.S.C. 154(b) by 0 days.

This patent is subject to a terminal disclaimer.

(21) Appl. No.: **18/618,609**

(22) Filed: **Mar. 27, 2024**

(65) **Prior Publication Data**

US 2024/0243335 A1 Jul. 18, 2024

Related U.S. Application Data

(63) Continuation of application No. 18/132,719, filed on Apr. 10, 2023, now Pat. No. 11,973,177, which is a (Continued)

(30) **Foreign Application Priority Data**

Apr. 14, 2017 (KR) 10-2017-0048645
Apr. 13, 2018 (KR) 10-2018-0043191

(51) **Int. Cl.**
H01M 10/04 (2006.01)
H01M 50/538 (2021.01)
H01M 50/536 (2021.01)

(52) **U.S. Cl.**
CPC ... ***H01M 10/0422*** (2013.01); ***H01M 10/0431*** (2013.01); ***H01M 50/538*** (2021.01); *H01M 50/536* (2021.01)

(58) **Field of Classification Search**
None
See application file for complete search history.

(56) **References Cited**

U.S. PATENT DOCUMENTS

3,761,314 A 9/1973 Cailley
4,822,377 A 4/1989 Wolff
(Continued)

FOREIGN PATENT DOCUMENTS

CN 101714624 A 5/2010
CN 201450072 U 5/2010
(Continued)

OTHER PUBLICATIONS

International Search Report from Application No. PCT/KR2018/004366 mailed Jul. 20, 2018, pp. 1-2.
(Continued)

Primary Examiner — Alix E Eggerding
(74) *Attorney, Agent, or Firm* — Lerner David LLP

(57) **ABSTRACT**

The present invention relates to a secondary battery in which an electrode tab is improved in mechanical strength and a method for manufacturing the same. Also, the secondary battery according to the present invention includes: an electrode provided with a coating portion coated with an active material on an electrode collector and a non-coating portion on which the active material is not applied to the electrode collector, the non-coating portion being adjacent to the coating portion in a width direction perpendicular to a longitudinal direction of the electrode collector, the non-coating portion having a plurality of notching tabs formed therein such that each of the plurality of notching tabs extends away from the coating portion in a width direction. When the electrode assembly is in the wound state, the plurality of notching tabs are circumferentially distributed about a central axis of the electrode assembly.

15 Claims, 9 Drawing Sheets

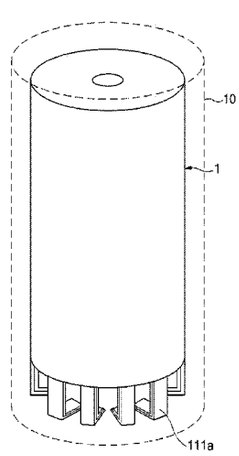

Related U.S. Application Data

continuation of application No. 16/498,751, filed as application No. PCT/KR2018/004366 on Apr. 13, 2018, now Pat. No. 11,652,232.

(56) **References Cited**

U.S. PATENT DOCUMENTS

6,569,565	B2	5/2003	Ligeois et al.	
11,652,232	B2	5/2023	Kim et al.	
11,973,177	B2 *	4/2024	Kim	H01M 10/0422
2001/0023038	A1	9/2001	Ligeois et al.	
2005/0003264	A1	1/2005	Oh et al.	
2005/0142436	A1	6/2005	Arai et al.	
2005/0277022	A1	12/2005	Kozuki	
2005/0287428	A1	12/2005	Cheon et al.	
2005/0287432	A1	12/2005	Cheon et al.	
2006/0024572	A1	2/2006	Lee	
2006/0127774	A1	6/2006	Kim et al.	
2007/0196730	A1	8/2007	Kozuki	
2010/0081052	A1	4/2010	Morishima et al.	
2010/0190056	A1	7/2010	Turner	
2010/0310926	A1	12/2010	Wang et al.	
2011/0067227	A1	3/2011	Sohn	
2011/0293977	A1	12/2011	Kim et al.	
2012/0009450	A1	1/2012	Chun	
2012/0208055	A1	8/2012	Ahn	
2013/0108903	A1	5/2013	Martin et al.	
2013/0252054	A1	9/2013	Barone et al.	
2013/0344364	A1	12/2013	Nanaumi et al.	
2014/0050956	A1	2/2014	Huang	
2015/0295270	A1	10/2015	Chun	
2016/0351966	A1	12/2016	Batson et al.	
2018/0145304	A1	5/2018	Kogetsu et al.	
2019/0379028	A1	12/2019	Lim et al.	

FOREIGN PATENT DOCUMENTS

CN	102024936	A	4/2011
CN	203250828	U	10/2013
CN	204577523	U	8/2015
EP	1134820	A1	9/2001
JP	H0935701	A	2/1997
JP	H11339756	A	12/1999
JP	2000-077078	A	3/2000
JP	2000-228182	A	8/2000
JP	2003338276	A	11/2003
JP	2005276459	A	10/2005
JP	2006128106	A	5/2006
JP	2006-324049	A	11/2006
JP	2007227137	A	9/2007
JP	2008066040	A	3/2008
JP	4401634	B2	1/2010
JP	2011065981	A	3/2011
JP	5117133	B2	1/2013
JP	5790576	B2	10/2015
JP	2016001575	A	1/2016
JP	6045286	B2	12/2016
JP	2020509534	A	3/2020
KR	20000051740	A	8/2000
KR	100515833	B1	9/2005
KR	20050121904	A	12/2005
KR	20050121914	A	12/2005
KR	20060022358	A	3/2006
KR	100599710	B1	7/2006
KR	100599749	B1	7/2006
KR	20100071941	A	6/2010
KR	20120006389	A	1/2012
KR	20120092367	A	8/2012
KR	20130073329	A	7/2013
KR	2015-0117135	A	10/2015
KR	2016-0009406	A	1/2016
KR	20160113612	A	9/2016
KR	20170006437	A	1/2017
WO	2012086690	A1	6/2012
WO	2014188501	A1	11/2014

OTHER PUBLICATIONS

Extended European Seach Report including Written Opinion for Application No. EP18784869.2 dated Jan. 21, 2020, 5 pages.

Chiinese Search Report for Application No. 201880025247, dated Aug. 24, 2021, 2 pages.

Extended European Seach Report including Written Opinion for Application No. 24187569.9 dated Oct. 11, 24. 9 pages.

Extended European Seach Report including Written Opinion for Application No. 24187669.7 dated Oct. 18, 24. 9 pages.

* cited by examiner

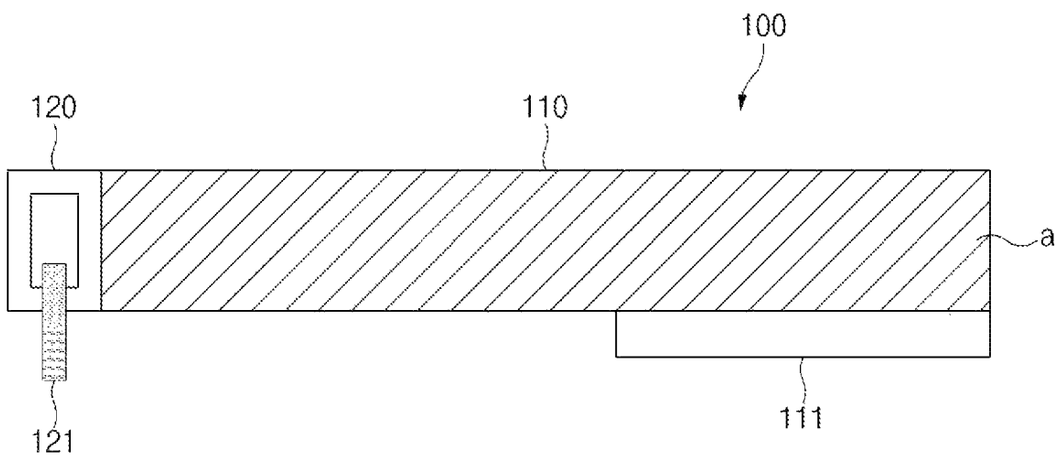

FIG.1

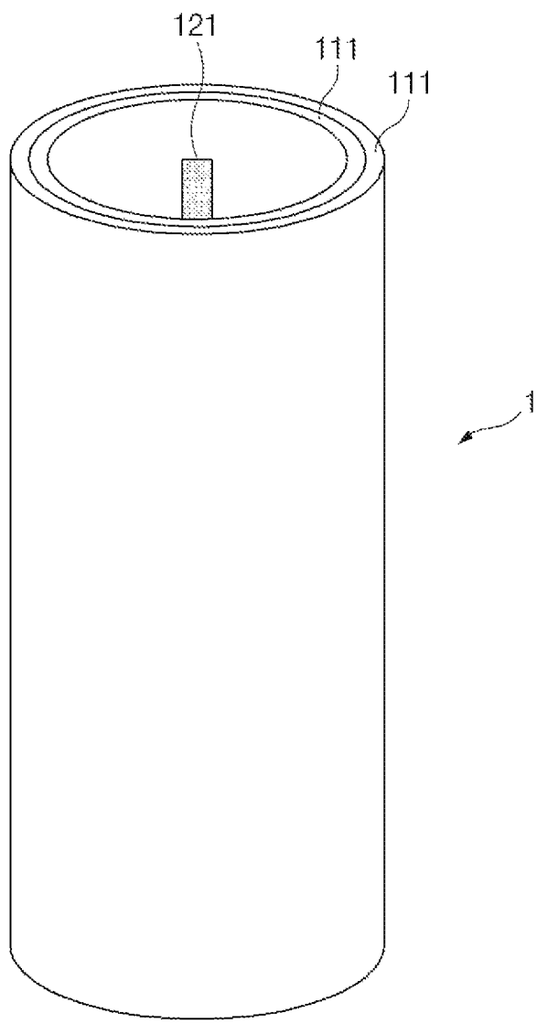

FIG.2

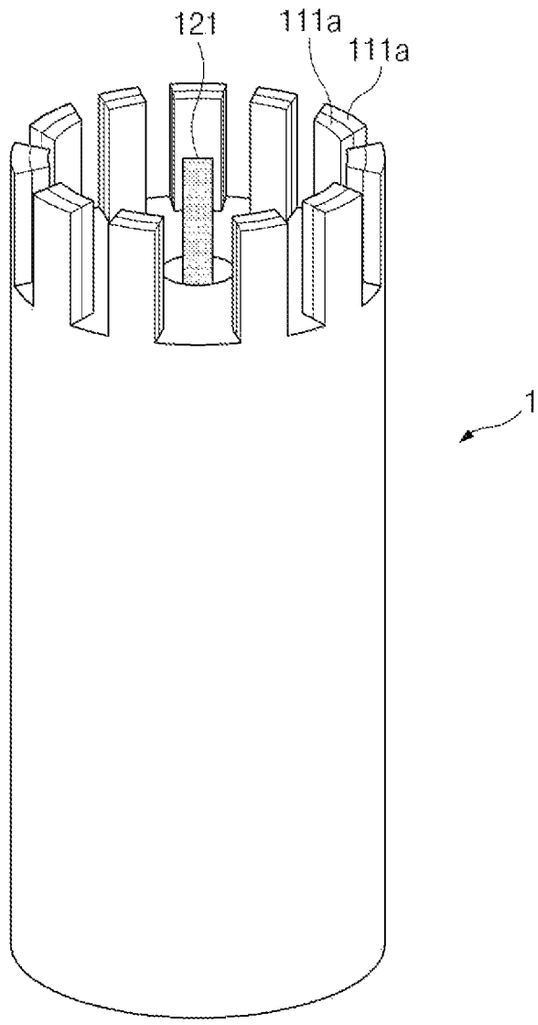

FIG.3

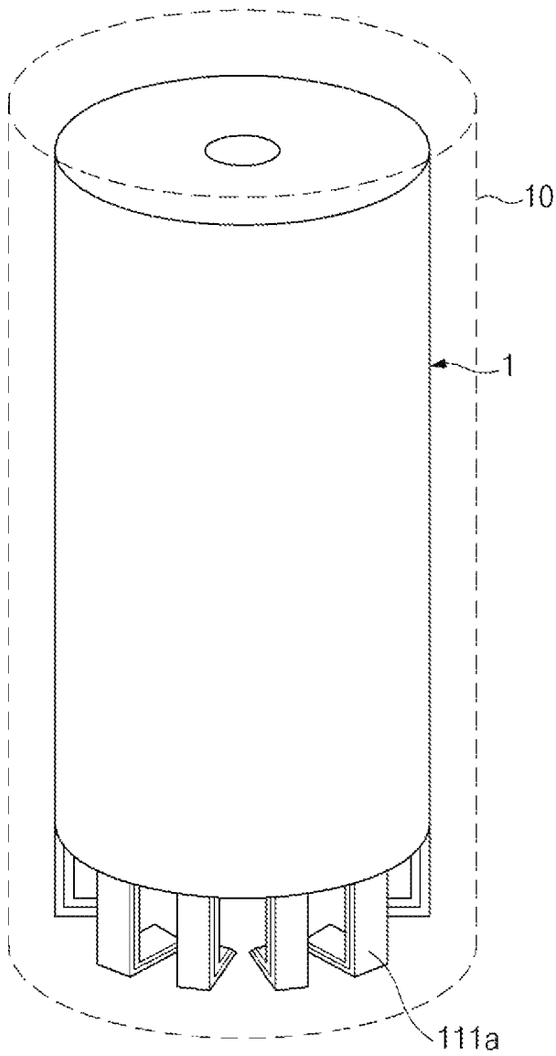

FIG.4

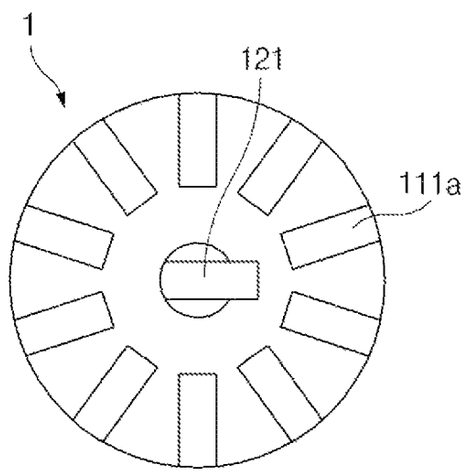

FIG.5

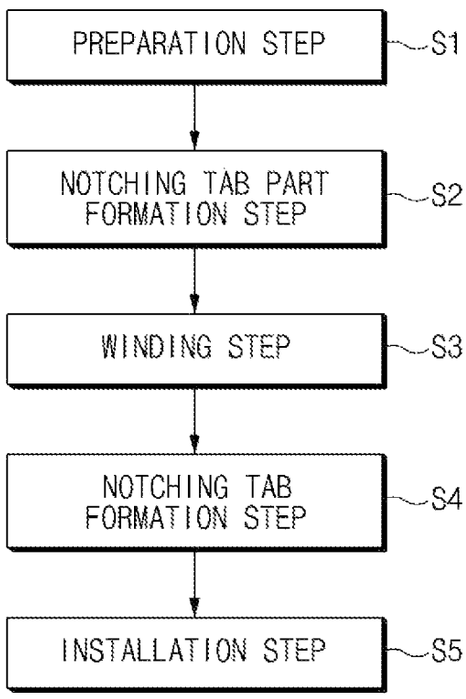
PREPARATION STEP
S1
NOTCHING TAB PART FORMATION STEP
S2
WINDING STEP
S3
NOTCHING TAB FORMATION STEP
S4
INSTALLATION STEP
S5

FIG.6

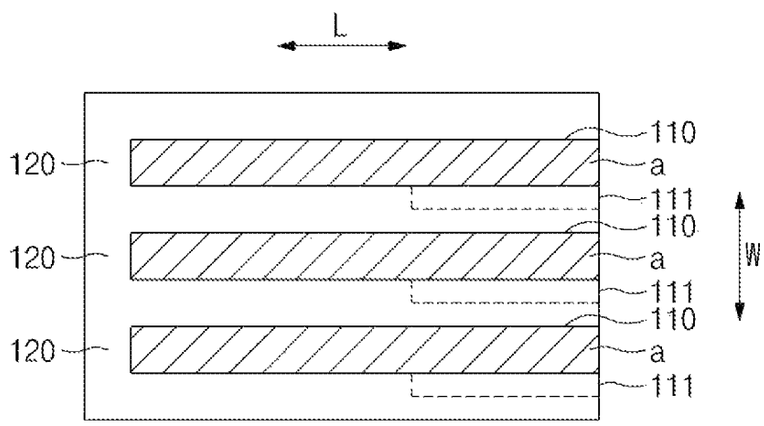

FIG.7

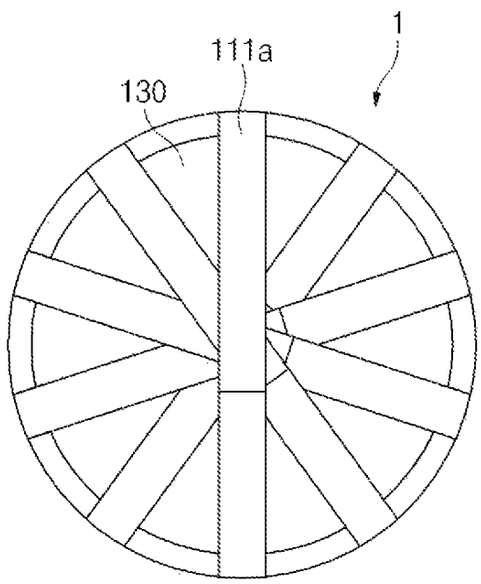

FIG.8

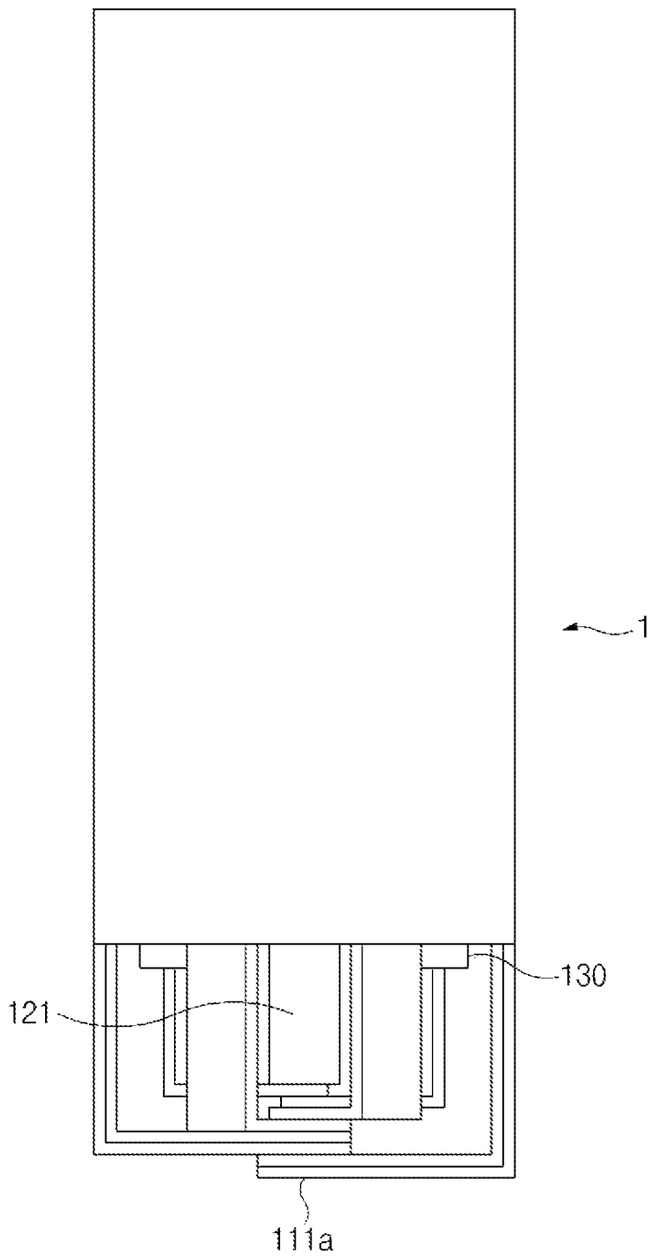

FIG.9

SECONDARY BATTERY AND METHOD FOR MANUFACTURING THE SAME

CROSS-REFERENCE TO RELATED APPLICATIONS

This application is a continuation of U.S. application Ser. No. 18/132,719, filed on Apr. 10, 2023, which is a continuation of U.S. application Ser. No. 16/498,751, filed on Sep. 27, 2019, now U.S. Pat. No. 11,652,232, which is a continuation of PCT International Application No. PCT/KR2018/004366, filed on Apr. 13, 2018, which claims priority from Korean Patent Application Nos. 10-2017-0048645, filed on Apr. 14, 2017, and 10-2018-0043191, filed on Apr. 13, 2018, the disclosures of which are hereby incorporated by reference herein in their entireties.

TECHNICAL FIELD

The present invention relates to a secondary battery and a method for manufacturing the same, and more particularly, to a secondary battery in which an electrode tab increases in mechanical strength and a method for manufacturing the same.

BACKGROUND ART

Batteries (cells) that generate electric energy through physical or chemical reaction to supply the generated electric energy to the outside are used when AC power to be supplied to the building is not obtained, or DC power is required according to the living environments surrounded by various electric and electronic devices.

Among such batteries, primary batteries and secondary batteries, which are chemical batteries using chemical reaction, are being generally used. The primary batteries are consumable batteries which are collectively referred to as dry batteries. Also, secondary batteries are rechargeable batteries that are manufactured by using a material in a redox process between current and a substance is repeatable several times. When the reduction reaction is performed on the material by the current, power is charged, and when the oxidation reaction is performed on the material, power is discharged. Such the charging-discharging is repeatedly performed to generate electricity.

A lithium ion battery of the secondary batteries is manufactured through the following processes. An active material is applied to each of a positive electrode conductive foil and a negative electrode conductive foil at a predetermined thickness, and a separator is disposed between the positive electrode conductive foil and the negative electrode conductive foil, and then, an electrode assembly, in which the positive electrode conductive foil, the separator, and the negative electrode conductive foil are wound several times in a jelly-roll or cylindrical shape, is accommodated into a cylindrical or prismatic can, a pouch, and the like to seal the resultant product, thereby manufacturing the lithium ion battery.

An electrode assembly and a secondary battery including the same according to the related art is disclosed in Korea Patent Publication No. 10-2012-0006389.

In the secondary battery according to the related art, it is necessary to apply a technology in which a metal having low resistance is applied to a negative electrode tab, or the number of electrode tabs increases in order to develop a low resistance cell.

A negative multi-tab structure developed by this necessity was a two-tab structure in which an electrode tab is attached to each of a core and an outer portion or a three-tab structure in which an electrode tab is applied to each of a core and an outer portion, and a middle tab is attached to an intermediate portion.

However, in order to attach the middle tab on the characteristics of the jelly roll, a non-coating portion has to be formed on a predetermined portion in the middle of the electrode. Thus, there is a problem that the battery capacity is lowered due to an increase of the non-coating portion.

DISCLOSURE OF THE INVENTION

Technical Problem

Therefore, the present invention has been made to solve the abovementioned problem, and an object of the prevent invention is to provide a secondary battery in which a multi-tab is formed while minimizing a non-coating portion and a method for manufacturing the same.

Also, an object of the present invention is to provide a secondary battery which is capable of increasing in mechanical strength while notching electrode foil to form an electrode tab and a method for manufacturing the same.

Technical Solution

A secondary battery according to an embodiment of the present invention includes: an electrode provided with a coating portion coated with an active material on an electrode collector and a non-coating portion on which the active material is not applied to the electrode collector in a longitudinal direction of the electrode collector; and a notching tab part extending from the coating portion in a width direction of the electrode collector perpendicular to the longitudinal direction and not coated with the active material, the notching tab part having a wound state including two or more overlapping layers when the electrode is in a wound state.

The notching tab part may continuously extend across ⅓ or more of a total length of the coating portion in the longitudinal direction.

When the electrode is in the wound state, the notching tab part may form a plurality of notching tabs.

The foil tab may have a width of 4 mm to 120 mm.

The electrode may be accommodated in a can member, and each of the plurality of notching tabs may be in a bent state and may be connected to the can member.

A bent part formed by bending each of the plurality of notching tabs may be bonded to the can member.

The secondary battery may further include an insulation member disposed between the bent parts and an end of the electrode.

The secondary battery may further include an electrode tab attached to the non-coating portion.

When the electrode is in the wound state, the notching tab part may form a plurality of notching tabs, and the electrode may be accommodated in a can member, and each of the plurality of notching tabs may be in a bent state and may overlap the electrode tab.

The electrode tab and the plurality of notching tabs may be bonded together to the can member.

A method for manufacturing a secondary battery according to an embodiment of the present invention includes: a preparation step of preparing an electrode provided with a coating portion coated with an active material on an elec-

trode collector and a non-coating portion on which the active material is not applied to the electrode collector in a longitudinal direction of the electrode collector; a notching tab part formation step of notching the electrode to form a notching tab part not coated with the active material and extending from the coating portion in a width direction of the electrode collector perpendicular to the longitudinal direction, the notching tab part extending across ⅓ or more of a total length of the coating portion in the longitudinal direction; a winding step including stacking the electrode with a separator and with another electrode having a polarity different from that of the electrode and winding the electrode, the separator, and the another electrode to form an electrode assembly; a notching tab formation step of cutting the notching tab part of the electrode assembly to form a plurality of notching tabs; and an installation step of accommodating the electrode assembly into a can member and bonding each of the plurality of notching tabs to the can member.

The electrode may be a negative electrode.

During the preparation step, the coating portion coated with the active material on the electrode collector and the non-coating portion on which the active material is not applied may be arranged in parallel to each other in the width direction of the electrode collector.

during the notching tab part formation step, the notching tab part on which the active material is not applied may be notched in the width direction of the coating portion while cutting the coating portion and the non-coating portion in the longitudinal direction of the electrode collector.

During the notching tab part formation step, notching may be performed so that the notching tab part on which the active material is not applied is notched in the width direction of the coating portion while cutting the electrode.

During the notching tab formation step, the notching tab part may be cut using a laser.

During the installation step, the electrode assembly may be accommodated in the can member in a state in which the plurality of notching tabs are bent and bonded to the can member.

During the installation step, a bent portion of each of the plurality of notching tabs may be welded to the can member.

During the installation step, bent portions of each of the plurality of notching tabs may overlap each other and may be bonded to the can member together.

During the winding step, the notching tab part may be wound to form two or more overlapping layers.

Advantageous Effects

According to the present invention, the multi-tab may be formed while minimizing the formation of the non-coating portion.

According to the present invention, the multi-tab may be formed to minimize the electric resistance.

According to the present invention, the formation of the non-coating part may be minimized to secure the battery capacity.

According to the present invention, the notching tab may overlap each other to form two or more layers while forming the notching tab that is the foil tab from the electrode foil, whereby increasing in mechanical strength.

According to the present invention, the notching tab that is the foil tab may increase in mechanical strength to prevent the notching tab from being broken in the bent state, and thus, the notching tab may be boned to the can member in the bent state to secure the reliability in electrical connection and improve the bonding performance.

According to the present invention, the notching tab and the electrode tab may be bonded to the can member at the same to secure the welding processability.

According to the present invention, the plurality of notching tabs may be formed outside the electrode assembly to install the insulation member between the plurality of notching tabs and the end of the electrode assembly, and thereby to prevent the notching tabs and the electrode assembly from coming into contact with each other, thereby improving the safety.

BRIEF DESCRIPTION OF THE DRAWINGS

FIG. **1** is a development view of an electrode according to an embodiment of the present invention.

FIG. **2** is a perspective view illustrating a state in which the electrode of FIG. **1** is wound.

FIG. **3** is a perspective view illustrating a state in which a notching tab part is cut to form a notching tab in FIG. **2**.

FIG. **4** is a projective perspective view when seeing through a can member in a state in which an electrode assembly is installed in the can member according to an embodiment of the present invention.

FIG. **5** is a bottom view of only the electrode assembly in FIG. **4**.

FIG. **6** is a flowchart successively illustrating a method for manufacturing a secondary battery according to an embodiment of the present invention.

FIG. **7** is a plan view illustrating a state in which a coating portion and a non-coating portion, which are formed in a longitudinal direction of an electrode collector, are arranged in parallel to each other in a width direction of the electrode collector according to an embodiment of the present invention.

FIG. **8** is a bottom view illustrating a state in which a notching tab and an electrode tab are bonded to each other according to another embodiment of the present invention.

FIG. **9** is a side view of FIG. **8**.

MODE FOR CARRYING OUT THE INVENTION

Hereinafter, a secondary battery and a method for manufacturing the same according to exemplary embodiments of the present invention will be described in detail with reference to the accompanying drawings.

Terms or words used in the specification and claims should not be construed as limited to a lexical meaning, and should be understood as appropriate notions by the inventor based on that he/she is able to define terms to describe his/her invention in the best way to be seen by others. Therefore, embodiments and drawings described herein are simply exemplary and not exhaustive, and it will be understood that various equivalents may be made to take the place of the embodiments.

In the drawings, the dimension of each of components or a specific portion constituting the component is exaggerated, omitted, or schematically illustrated for convenience in description and clarity. Thus, the dimension of each element does not entirely reflect an actual size. Moreover, detailed descriptions related to well-known functions or configurations will be ruled out in order not to unnecessarily obscure subject matters of the present invention.

FIG. **1** is a development view of an electrode according to an embodiment of the present invention, and FIG. **2** is a perspective view illustrating a state in which the electrode of FIG. **1** is wound.

As illustrated in FIGS. **1** and **2**, a secondary battery according to an embodiment of the present invention includes an electrode on which a coating portion **110** coated with an active material a on an electrode collector and a non-coating portion **120**, on which the active material a is not applied on the electrode collector, are disposed in a longitudinal direction of the electrode collector and a notching tab part **111** extending from the coating portion **110** in a width direction of the electrode collector without being coated with the active material a and overlapping each other to form two or more layers when the electrode **100** is wound (FIG. **2** illustrates a notching tab part **111** that overlap each other to form two or more layers).

The foil tab may overlap each other to form two or more layers while forming the notching tab part that is a foil tab from electrode foil of the electrode collector, thereby increasing in mechanical strength.

The electrode **100** may be one of a positive electrode coated with a positive electrode active material and a negative electrode coated with a negative electrode active material. The electrode assembly **1** may be manufactured by stacking the positive electrode, the negative electrode, and a separator several times so that the separator is disposed between the positive electrode and the negative electrode.

Also, the electrode assembly **1** may be manufactured by winding a stack, in which the positive electrode, the separator, and the negative electrode are stacked, in a jelly-roll shape.

The positive electrode may be an aluminum electrode collector and include a positive electrode coating portion coated with the positive electrode active material and a positive electrode non-coating portion which is not coated with the positive electrode active material.

The positive electrode active material may include a lithium-containing transition metal oxide such as $LiCoO_2$, $LiNiO_2$, $LiMnO_2$, and $LiMnO_4$ or a lithium chalcogenide compound.

The positive electrode coating portion may be manufactured, for example, by applying the positive electrode active material to a portion of at least one surface of the aluminum electrode collector, and the remaining portion of the aluminum electrode collector, which is not coated with the positive electrode active material, may be the positive electrode non-coating portion.

The negative electrode may be a copper electrode collector and include a negative electrode coating portion coated with the negative electrode active material and a negative electrode non-coating portion which is not coated with the negative electrode active material.

The negative electrode active material may be a carbon material such as crystalline carbon, amorphous carbon, a carbon composite, and a carbon fiber, a lithium metal, or a lithium alloy.

The negative electrode coating portion may be manufactured, for example, by applying the negative electrode active material to a portion of at least one surface of the copper electrode collector, and the remaining portion of the copper electrode collector, which is not coated with the negative electrode active material, may be the negative electrode non-coating portion.

The separator may be manufactured by applying a polyvinylidene fluoride-hexafluoropropylene copolymer (PVDF-HFP co-polymer) to one base material selected from the group consisting of, for example, polyethylene (PE), polystyrene (PS), polypropylene (PP), and a copolymer of polyethylene (PE) and polypropylene.

As described above, the electrode **100** according to the present invention may be one of the positive electrode and the negative electrode, which constitute the electrode assembly **1**. Particularly, the electrode **100** may be one, which requires further reduction in resistance, of the positive electrode and the negative electrode.

In the present invention, the negative electrode will be described as an example.

The electrode **100** has one end on which the non-coating portion **120** is formed. An electrode tab **121** may be attached to the non-coating portion **120** formed on the one end of the electrode **100**.

The notching tab part **111** may be formed by notching the electrode **100** to extend from the coating portion **110** of the electrode **100** in the width direction. Only the electrode collector may be formed to extend on an area corresponding to ⅓ or more of the total length of the coating portion **110** of the electrode **100**, and the active material a may not be applied.

Only the active material a may be removed from the coating portion **110** extending from the electrode **100** to form the notching tab part **111**. Alternatively, only the electrode foil may extend without applying the active material a on the area of the coating portion **110** of the electrode **100** to form the notching tab part **111**.

Thus, there may be an effect of forming the multi-tab while minimizing the formation of the non-coating portion, and the formation of the non-coating portion may be minimized to secure the battery capacity.

FIG. **3** is a perspective view illustrating a state in which the notching tab part is cut to form the notching tab in FIG. **2**.

As illustrated in FIG. **3**, the notching tab part **111** may be cut in the wound state to form a plurality of notching tabs **111***a*. When the number of notching tabs **111***a* increases, the electrode tab may decrease in resistance.

Here, one notching tab **111***a* may have a width of 4 mm to 5 mm. This is done for a reason in which, if the notching tab **111***a* has a width that is less than 4 mm, the mechanical strength may be weakened, and if the notching tab **111***a* has a width exceeding 5 mm, deformation in the process of bonding for the electrical connection with the can member may be difficult.

The notching tab **111***a* that is the foil tab may increase in mechanical strength to prevent the notching tab **111***a* from being broken in the bent state, and thus, the notching tab **111***a* may be bonded to the can member in the bent state to secure the reliability in electrical connection and improve the bonding performance.

FIG. **4** is a projective perspective view when seeing through the can member in a state in which the electrode assembly is installed in the can member according to an embodiment of the present invention, and FIG. **5** is a bottom view of only the electrode assembly in FIG. **4**.

As illustrated in FIGS. **4** and **5**, in the electrode assembly **1** of the secondary battery according to the present invention, a bent part of the notching tab **111***a* may be welded to be coupled to the can member **10** so that the notching tab **111***a* is electrically connected to the can member **10** in a state in which the notching tab **111***a* is bent while being accommodated in the can member **10**.

The notching tab **111***a* may be bent to allow an end of the notching tab **111***a* to be coupled to a center of a bottom surface of the can member **10**. Thus, the plurality of notching tabs **111***a* may be electrically connected to each other while the electrical connection is smooth to minimize the electric resistance.

FIG. **8** is a bottom view illustrating a state in which a notching tab and an electrode tab are bonded to each other according to another embodiment of the present invention, and FIG. **9** is a side view of FIG. **8**.

As illustrated in FIGS. **8** and **9**, in a secondary battery according to another embodiment of the present invention, a notching tab part **111** of an electrode assembly **1**, in which an electrode **100** is wound, may be cut to form a plurality of notching tabs **111***a*. The plurality of notching tabs **111***a* may be bent and then be connected to overlap an electrode tab **121** formed on a central portion of an end of the electrode assembly **1**.

Also, the electrode assembly **1** may be accommodated in a can member **10**, and the plurality of notching tabs **111***a* connected to overlap the electrode tab **121** may be bonded to the can member **10** together with the electrode tab **121** through welding.

As described above, in the secondary battery according to another embodiment of the present invention, since the plurality of notching tabs **111***a* and the electrode tab **121** are welded together to the can member **10** in the state in which the notching tabs **111***a* and the electrode tab **121** are connected to overlap each other, welding processability may be easily secured.

In the secondary battery according to another embodiment of the present invention, when an end of the electrode assembly **1** has a length ranging of 16 mm to 21 mm, a notching length of each of the plurality of notching tabs **111***a* may range of 8 mm to 11 mm. When the notching length of the notching tab **111***a* is less than 8 mm, the length of the notching tab **111***a* may be shortened, and the notching tab **111***a* may be bent. Thus, it may be difficult to allow the notching tab **111***a* to overlap the electrode tab **121** formed on a central portion of an end of the electrode assembly **1**. Also, when the notching length of the notching tab **111***a* exceeds 11 mm, the length of the notching tab **111***a* may be unnecessarily lengthened to increase in cost due to waste of the material and in space occupied by the notching tab **111***a* within the can member **10**. Thus, an amount of electrolyte filled into the can member **10** may be reduced to deteriorate capacity. Preferably, the notching tab **111***a* may have a notching length of 9 mm to 10 mm.

In the secondary battery according to another embodiment of the present invention, an insulation member **130** may be formed between a bent part of the notching tab **111***a* and an end of the electrode assembly **1** in which the electrode **100** is wound.

The insulation member **130** may insulate the notching tab **111***a* from the end of the electrode assembly **1** to prevent the notching tab **111***a* from coming into contact with the electrode assembly **1**.

The plurality of notching tabs **111***a* may be formed on an outer portion of the end of the electrode assembly to prevent the insulation member **130** from interfering with the end of the electrode assembly **1**.

The plurality of notching tabs **111***a* may be formed on the outside of the electrode assembly so that the insulation member **130** is installed between the plurality of notching tabs **111***a* and the end of the electrode assembly **1**. Thus, the contact between the notching tab **111***a* and the electrode assembly **1** may be prevented to improve safety.

Hereinafter, a method of manufacturing a secondary battery according an embodiment of the present invention will be described in detail with reference to the accompanying drawings.

FIG. **6** is a flowchart successively illustrating a method for manufacturing a secondary battery according to an embodiment of the present invention.

As illustrated in FIG. **6**, a method for manufacturing a secondary battery according to an embodiment of the present invention includes a preparation step (S**1**), a notching tab part formation step (S**2**), a winding step (S**3**), a notching tab formation step (S**4**), and an installation step (S**5**).

The preparation step (S**1**) is a step of preparing an electrode **100** in which a coating portion **110** coated with an active material a on an electrode collector and a non-coating portion **120** on which the active material a is not applied are provided in a longitudinal direction of the electrode collector.

Here, the electrode **100** may be a negative electrode.

FIG. **7** is a plan view illustrating a state in which the coating portion and the non-coating portion, which are formed in the longitudinal direction of the electrode collector, are arranged in parallel to each other in a width direction of the electrode collector according to an embodiment of the present invention.

As illustrated in FIG. **7**, in the preparation step (S**1**), the coating portion **110** and the non-coating portion **120**, which are formed in a longitudinal direction L of the electrode collector may be arranged in parallel to each other in the width direction W of the electrode collector.

In the notching tab part formation step (S**2**) is a step of notching the electrode **10** to form a notching tab part **111** extending in a state in which the active material is not formed in the width direction W of the coating portion **111** on an area of the electrode **100** corresponding to ⅓ or more of a length of the coating portion **110**.

As described above, the notching of the notching tab part **111** in the electrode **100** may a step of notching a portion of the non-coating portion on which the active material a is not applied and which is formed in the width direction W of the coating portion **11** while cutting the electrode **100** in the electrode collector to form a notch tab part **11**.

Also, when the coating portion **100** and the non-coating portion **120**, which are formed in the longitudinal direction L of the electrode collector, are arranged in parallel to each other in the width direction W of the electrode collector, the non-coating portion on which the active material is not applied and which is formed between one coating portion **110** and the other coating portion **110***a*, which are arranged in parallel to each other in the width direction W may be notched while cutting the coating portion **110** and the non-coating portion **120**, which are arranged in parallel to each other to form the notching tab part **111** in the width direction W of the coating portion **110**.

The winding step (S**3**) may be a step of stacking the electrode **100**, on which the notching tab part **111** is formed, on the separator and the other electrode having a polarity different from that of the electrode **100** and winding the stack to form the electrode assembly **1**.

While the electrode **100** is wound, the notching tab part **111** may overlap each other to form two or more layers.

The notching tab formation step (S**4**) may be a step of cutting the notching tab part **111** to form a plurality of notching tabs **111***a*.

The notching tabs **111***a* formed by cutting the notching tab part **111** may overlap each other to two or more layers like the notching tab part **111**.

Here, the cutting of the notching tab part **111** may be maximized in work efficiency by using laser.

The insulation step (S5) may be a step of accommodating the electrode assembly **1** into the can member **10** to bond the notching tabs **111***a* to the can member **10**.

In the installation step (S5), each of the notching tab **111***a* may be bent so that the welding is easily performed while the notching tab **111***a* is electrically connected to the can member **10** to allow the electrode assembly **1** to be accommodated in the can member **10** in the state in which the notching tab **111***a* is bent.

Here, since the notching tab **111***a* has the two or more layers, even though the notching tab **111***a* is bent, mechanical strength may be maintained, and thus, the notching tab may not be easily broken.

The bent notching tab **111***a* may have an end that faces a center of a bottom surface of the can member **10**.

The coupling between the bottom surface of the can member **10** and the notching tab **111***a* may be performed by welding the bent part of the notching tab **111***a* to the bottom surface of the can member **10**.

In addition, according to another embodiment of the present invention, the bent portions of the plurality of notching tabs **111***a* may overlap the central portion of the end of the electrode assembly **1** so as to be welded and bonded to the can member **10** together with the electrode tab **121** formed on the central portion of the end of the electrode **1** at the same time.

Although the secondary battery and the method for manufacturing the same according to the present invention has been described above with reference to the exemplary drawings, various changes and modifications may be made thereto by one skilled in the art without departing from the scope and spirit of the invention as set forth in the appended claims.

The invention claimed is:

1. A secondary battery comprising:

a can member; and

an electrode assembly having a positive electrode, a negative electrode and a separator disposed therebetween, which are wounded together in a wound state in a jelly-roll shape,

wherein the positive electrode or the negative electrode comprises:

an electrode collector;

a coating portion coated with an active material on the electrode collector; and

a non-coating portion on which the active material is not applied to the electrode collector, the non-coating portion being adjacent to the coating portion in a width direction perpendicular to a longitudinal direction of the electrode collector, the non-coating portion having a plurality of notching tabs formed therein such that each of the plurality of notching tabs extends away from the coating portion in the width direction,

wherein, when the electrode assembly is in the wound state, the plurality of notching tabs are circumferentially distributed about a central axis of the electrode assembly,

wherein the plurality of notching tabs are bent in a radial direction towards the central axis so as to form an overlapping region in which the plurality of notching tabs overlap one another in the width direction of the electrode collector, and

wherein at least some of the plurality of notching tabs are directly bonded to others of the plurality of notching tabs at the overlapping region so as to define an electrical connection between the plurality of notching tabs and the can member.

2. The secondary battery of claim **1**, wherein the overlapping region is positioned along the central axis of the electrode assembly.

3. The secondary battery of claim **1**, wherein the plurality of notching tabs is formed on a radially outer portion of an end of the electrode assembly, the radially outer portion being remote from the central axis.

4. The secondary battery of claim **1**, wherein the plurality of notching tabs are bonded to the can member by welding.

5. The secondary battery of claim **1**, further comprising an insulation member disposed between bent parts of the plurality of notching tabs and an end of the electrode assembly.

6. The secondary battery of claim **5**, wherein the overlapping region is disposed on the insulation member.

7. The secondary battery of claim **1**, wherein the plurality of notching tabs are equally circumferentially distributed about the central axis of the electrode assembly.

8. The secondary battery of claim **1**, further comprising an electrode tab attached to a non-coated portion at one end of the electrode collector in the longitudinal direction, wherein bent parts of the plurality of notching tabs overlap the electrode tab, and the bent parts of the plurality of notching tabs and the electrode tab are electrically connected to the can member by welding.

9. The secondary battery of claim **1**, wherein the bent parts of the plurality of notching tabs overlap an electrode tab coupled to the electrode assembly and extending from a central portion of an end of the electrode assembly, the central portion being positioned along the central axis.

10. The secondary battery of claim **1**, wherein the notching tab part continuously extends across ⅓ or more of a total length of the coating portion in the longitudinal direction.

11. The secondary battery of claim **1**, wherein each of the plurality of notching tabs has a width of 4 mm to 5 mm.

12. The secondary battery of claim **1**, wherein each of the plurality of notching tabs overlaps with at least another one of the plurality of notching tabs in the wound state so as to define a respective plurality of layer portions, each of the layer portions extending only over a same circumferentially extending angle about the central axis of the electrode assembly.

13. The secondary battery of claim **1**, wherein the plurality of notching tabs are circumferentially distributed at at least ten locations about the central axis of the electrode assembly.

14. The secondary battery of claim **1**, wherein the plurality of notching tabs includes at least twenty notching tabs.

15. The secondary battery of claim **1**, wherein the plurality of notching tabs are bonded to an end portion of the can member by welding, the end portion being perpendicular to the central axis of the electrode assembly.

* * * * *

UNITED STATES PATENT AND TRADEMARK OFFICE

UNITED STATES DEPARTMENT OF COMMERCE
United States Patent and Trademark Office
Address: COMMISSIONER FOR PATENTS
P.O. Box 1450
Alexandria, Virginia 22313-1450
www.uspto.gov

BIB DATA SHEET

CONFIRMATION NO. 3847

SERIAL NUMBER	FILING or 371(c) DATE	CLASS	GROUP ART UNIT	ATTORNEY DOCKET NO.
18/618,609	03/27/2024 **RULE**	429	RD00	LGES 3.3F-1654 CON CON

APPLICANTS
LG Energy Solution, Ltd., Seoul, KOREA, REPUBLIC OF;

INVENTORS
Jae Woong Kim, Daejeon, KOREA, REPUBLIC OF;
Hyoung Kwon Kim, Daejeon, KOREA, REPUBLIC OF;
Sang Uck Kim, Daejeon, JAPAN;

**** CONTINUING DATA ***************************
This application is a CON of 18/132,719 04/10/2023 PAT 11973177
which is a CON of 16/498,751 09/27/2019 PAT 11652232
which is a 371 of PCT/KR2018/004366 04/13/2018

**** FOREIGN APPLICATIONS ***************************
REPUBLIC OF KOREA 10-2018-0043191 04/13/2018
REPUBLIC OF KOREA 10-2017-0048645 04/14/2017

**** IF REQUIRED, FOREIGN FILING LICENSE GRANTED ****
04/04/2024

			STATE OR COUNTRY	SHEETS DRAWINGS	TOTAL CLAIMS	INDEPENDENT CLAIMS
Foreign Priority claimed	☑ Yes ☐ No		KOREA, REPUBLIC OF	9	14	1
35 USC 119(a-d) conditions met	☑ Yes ☐ No	☐ Met after Allowance				
Verified and Acknowledged	/ALIX ECHELMEYER EGGERDING/ Examiner's Signature	AE Initials				

ADDRESS
LG
Lerner David LLP
20 Commerce Drive
Cranford, NJ 07016
UNITED STATES

TITLE
Secondary Battery And Method For Manufacturing The Same

FILING FEE RECEIVED		
0.00	FEES: Authority has been given in Paper No._____ to charge/credit DEPOSIT ACCOUNT No._____ for following:	☐ All Fees ☐ 1.16 Fees (Filing) ☐ 1.17 Fees (Processing Ext. of time) ☐ 1.18 Fees (Issue) ☐ Other _____ ☐ Credit

UNITED STATES
PATENT AND TRADEMARK OFFICE

P.O. Box 1450
Alexandria, VA 22313 - 1450
www.uspto.gov

ELECTRONIC ACKNOWLEDGEMENT RECEIPT

APPLICATION #	RECEIPT DATE / TIME	ATTORNEY DOCKET #
18/618,609	**03/27/2024 04:28:32 PM Z ET**	**LGES 3.3F-1654 CON CON**

Title of Invention

Secondary Battery And Method For Manufacturing The Same

Application Information

APPLICATION TYPE	Utility - Nonprovisional Application under 35 USC 111(a)	PATENT #	-
CONFIRMATION #	3847	FILED BY	Sharon McGee
PATENT CENTER #	64862281	FILING DATE	-
CUSTOMER #	86765	FIRST NAMED INVENTOR	Jae Woong Kim
CORRESPONDENCE ADDRESS	-	AUTHORIZED BY	Kevin Kocun

Documents

TOTAL DOCUMENTS: 7

DOCUMENT	PAGES	DESCRIPTION	SIZE (KB)
Drawings LGES 33F-1654 CON CON.pdf	9	Drawings-only black and white line drawings	745 KB
LGES5172 - Application Data Sheet Fillable PDF.pdf	9	Application Data Sheet	2174 KB
Executed_Combined Declaration and Assignment.pdf	2	Oath or Declaration filed	100 KB
Communication Regarding Certified Copy.pdf	1	Miscellaneous Incoming Letter	21 KB
Transmittal_POA.pdf	2	Power of Attorney	87 KB
Utility Patent Application Transmittal.pdf	1	Transmittal of New Application	33 KB

Specification LGES 33F-1654 CON CON-APP.TEXT.docx	20	Application body structured text document	35 KB

Warning: Document has [Balance SBCS characters and DBCS characters] option enabled and may result in reduction of pages, however, no data or text has been modified.

Digest

DOCUMENT	MESSAGE DIGEST(SHA-512)
Drawings LGES 33F-1654 CON CON.pdf	D98C19B6796FD5AF70336CE9D1EACFA2B80CA3D80D6D7D9D539E85C5309B84C902A14A3159F09BBC99034659E444FC1EAF763BD7922EA1B4ED418978940D35E5
LGES5172 - Application Data Sheet Fillable PDF.pdf	79AA69D9898F60F2B9EC99041395155B8CB0E7455902D9D144408CB88CFCB335E849309F414553CA421A684E47A1D155B9DB6E783F0CD58A49C9F36E2D12E78A
Executed_Combined Declaration and Assignment.pdf	1CF21E106C76E5237C8024A574823C4D404833E7C445391460E42018380EE0FADB3F956200950FCFF5A3D9C574B782BBD3B6CF64E865447B8805E41561F010A5
Communication Regarding Certified Copy.pdf	F6ABA86F2E9BA969C57094E439136043DE0ABB429F404B1301C33B37DC7D209947B8BDC9528D4F955B7FF255C942680D3D925AE3632C1829B16F188512CE687E
Transmittal_POA.pdf	7C1A59345E6CAECE4FBA6E7E762E97978C01D1E372C569C4073A557F4F0FA42E4E342C0446287D7E5D04A4635710B30797C15A600975B144E34BF00E7A358C3E
Utility Patent Application Transmittal.pdf	8146992536337B5AD552DBD4347650F2FEFFC90195E67AEFA1091D4BE6E0CC81F4119430F6C8AA74EE9CB574E517FCDDA872D34A78E25D89349C17E9E5E6CBA8
Specification LGES 33F-1654 CON CON-APP.TEXT.docx	571A092130858B693E50996D9C97417585B7A2AEC08A0A23E13C256CE84CAD05665513DFE4DCA941A41B890C7843E5A9C1083EF145CE8271D8A883C2DD5805C0

This Acknowledgement Receipt evidences receipt on the noted date by the USPTO of the indicated documents, characterized by the applicant, and including page counts, where applicable. It serves as evidence of receipt similar to a Post Card, as described in MPEP 503.

New Applications Under 35 U.S.C. 111

If a new application is being filed and the application includes the necessary components for filing date (see 37 CFR 1.53(b)-(d) and MPEP 506), a Filing Receipt (37 CFR 1.54) will be issued in due course and the date shown on this Acknowledgement Receipt will establish the filing date of the application

National Stage of an International Application under 35 U.S.C. 371

If a timely submission to enter the national stage of an international application is compliant with the conditions of 35 U.S.C. 371 and other applicable requirements a Form PCT/DO/EO/903 indicating acceptance of the application as a national stage

submission under 35 U.S.C. 371 will be issued in addition to the Filing Receipt, in due course.

New International Application Filed with the USPTO as a Receiving Office

If a new international application is being filed and the international application includes the necessary components for an international filing date (see PCT Article 11 and MPEP 1810), a Notification of the International Application Number and of the International Filing Date (Form PCT/RO/105) will be issued in due course, subject to prescriptions concerning national security, and the date shown on this Acknowledgement Receipt will establish the international filing date of the application.

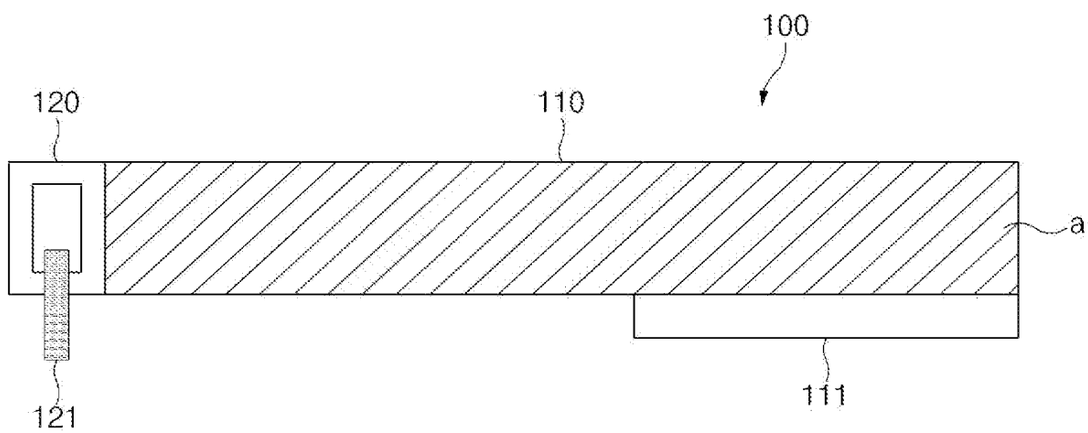

FIG.1

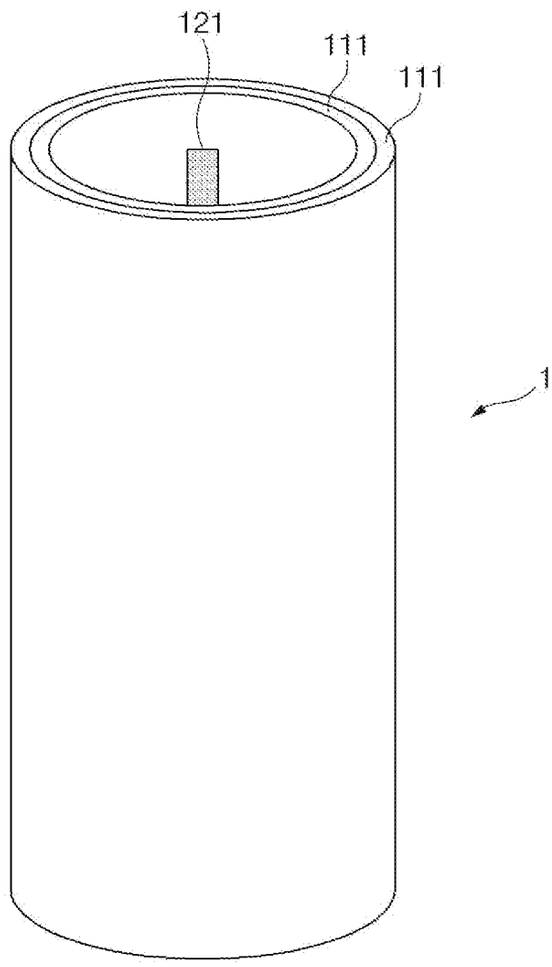

FIG.2

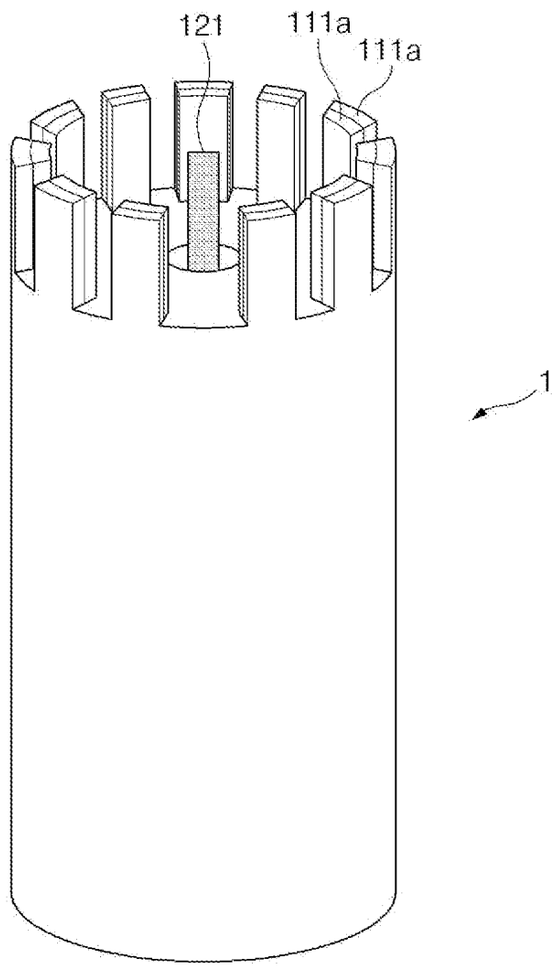

FIG.3

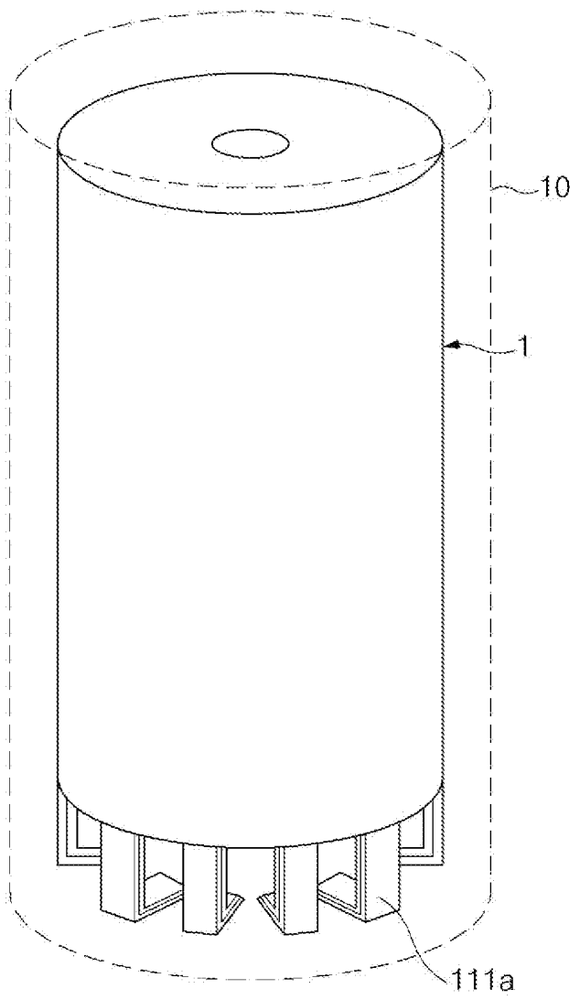

FIG.4

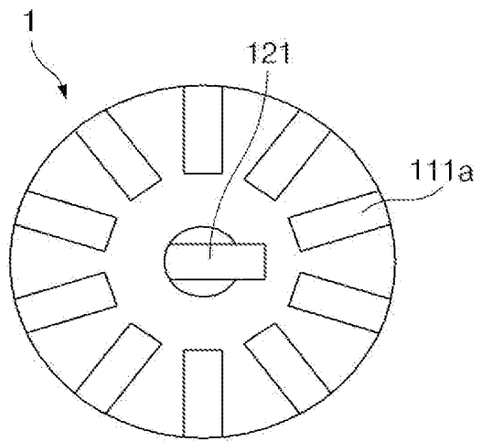

FIG.5

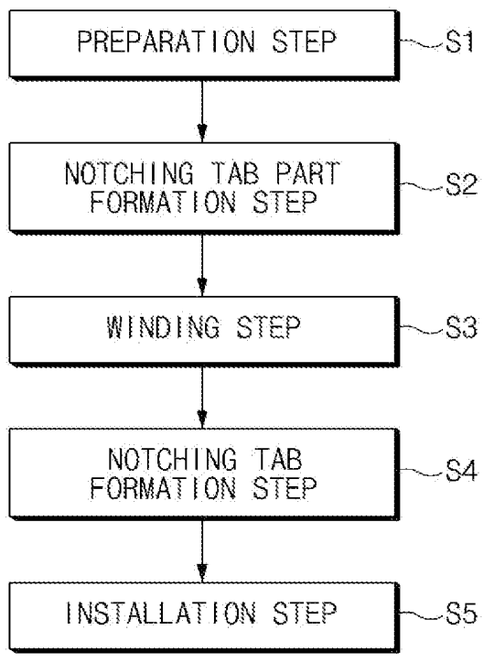
PREPARATION STEP
S1
NOTCHING TAB PART FORMATION STEP
S2
WINDING STEP
S3
NOTCHING TAB FORMATION STEP
S4
INSTALLATION STEP
S5

FIG.6

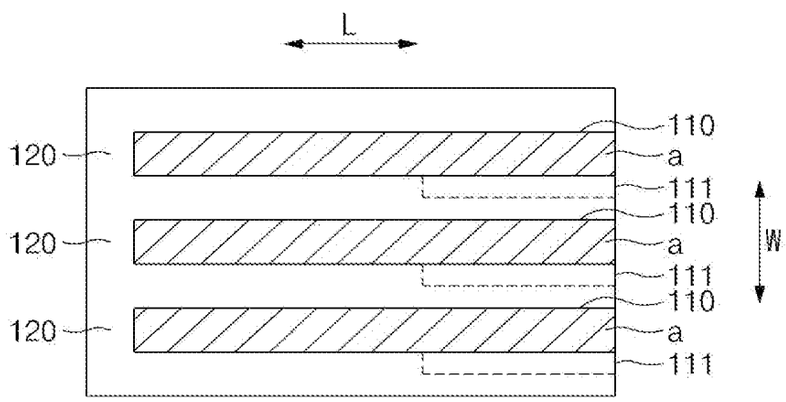

FIG.7

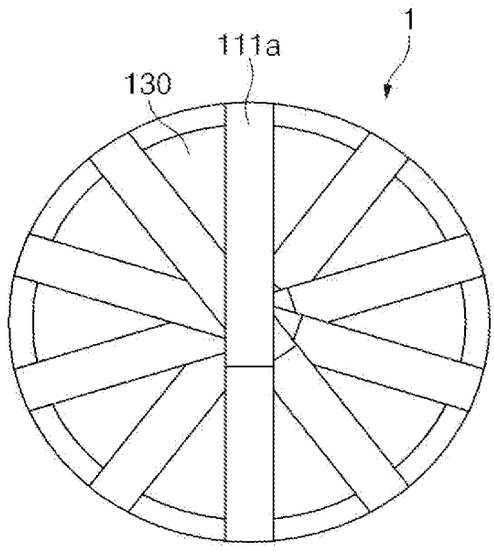

FIG.8

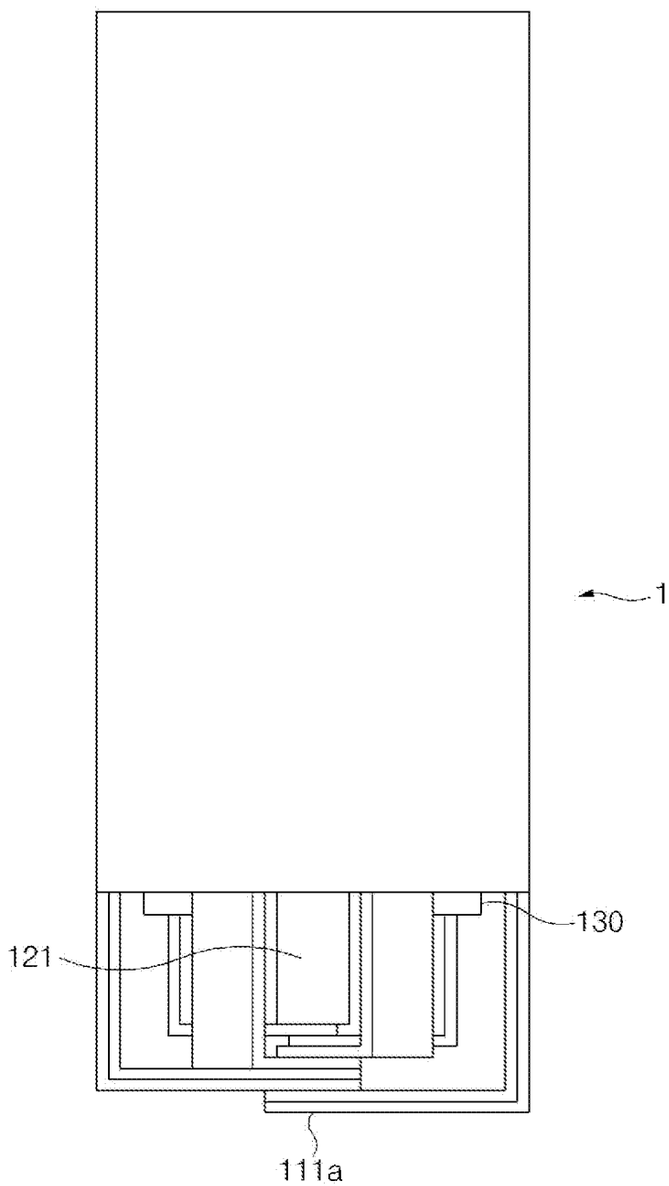

FIG.9

PTO/AIA/14 (01-22)
Approved for use through 05/31/2024. OMB 0651-0032
U.S. Patent and Trademark Office; U.S. DEPARTMENT OF COMMERCE
Under the Paperwork Reduction Act of 1995, no persons are required to respond to a collection of information unless it contains a valid OMB control number.

Application Data Sheet 37 CFR 1.76	Attorney Docket Number	LGES 3.3F-1654 CON CON
	Application Number	
Title of Invention	Secondary Battery And Method For Manufacturing The Same	

The application data sheet is part of the provisional or nonprovisional application for which it is being submitted. The following form contains the bibliographic data arranged in a format specified by the United States Patent and Trademark Office as outlined in 37 CFR 1.76.
This document may be completed electronically and submitted to the Office in electronic format using the Electronic Filing System (EFS) or the document may be printed and included in a paper filed application.

Secrecy Order 37 CFR 5.2:

☐ Portions or all of the application associated with this Application Data Sheet may fall under a Secrecy Order pursuant to 37 CFR 5.2 (Paper filers only. Applications that fall under Secrecy Order may not be filed electronically.)

Inventor Information:

Inventor 1 Remove

Legal Name

Prefix	Given Name	Middle Name	Family Name	Suffix
	Jae Woong		Kim	

Residence Information (Select One) ○ US Residency ◉ Non US Residency ○ Active US Military Service

City	Daejeon	Country of Residence i	KR

Mailing Address of Inventor:

Address 1	LG Chem Research Park, 188, Munji-ro		
Address 2	Yuseong-gu		
City	Daejeon	**State/Province**	
Postal Code	34122	**Country** i	KR

Inventor 2 Remove

Legal Name

Prefix	Given Name	Middle Name	Family Name	Suffix
	Hyoung Kwon		Kim	

Residence Information (Select One) ○ US Residency ◉ Non US Residency ○ Active US Military Service

City	Daejeon	Country of Residence i	KR

Mailing Address of Inventor:

Address 1	LG Chem Research Park, 188, Munji-ro		
Address 2	Yuseong-gu		
City	Daejeon	**State/Province**	
Postal Code	34122	**Country** i	KR

Inventor 3 Remove

Legal Name

PTO/AIA/14 (01-22)
Approved for use through 05/31/2024. OMB 0651-0032
U.S. Patent and Trademark Office; U.S. DEPARTMENT OF COMMERCE
Under the Paperwork Reduction Act of 1995, no persons are required to respond to a collection of information unless it contains a valid OMB control number.

Application Data Sheet 37 CFR 1.76	Attorney Docket Number	LGES 3.3F-1654 CON CON
	Application Number	
Title of Invention	Secondary Battery And Method For Manufacturing The Same	

Prefix	Given Name	Middle Name	Family Name	Suffix
	Sang Uck		Kim	

Residence Information (Select One) ○ US Residency ◉ Non US Residency ○ Active US Military Service

City	Daejeon	Country of Residence i	KR

Mailing Address of Inventor:

Address 1	LG Chem Research Park, 188, Munji-ro		
Address 2	Yuseong-gu		
City	Daejeon	**State/Province**	
Postal Code	34122	**Country** i	KR

All Inventors Must Be Listed - Additional Inventor Information blocks may be generated within this form by selecting the **Add** button. Add

Correspondence Information:

Enter either Customer Number or complete the Correspondence Information section below.
For further information see 37 CFR 1.33(a).

☐ **An Address is being provided for the correspondence Information of this application.**

Customer Number	86765		
Email Address		Add Email	Remove Email

Application Information:

Title of the Invention	Secondary Battery And Method For Manufacturing The Same		
Attorney Docket Number	LGES 3.3F-1654 CON CON	**Small Entity Status Claimed**	☐
Application Type	Nonprovisional		
Subject Matter	Utility		
Total Number of Drawing Sheets (if any)	9	**Suggested Figure for Publication (if any)**	4

Filing By Reference:

Only complete this section when filing an application by reference under 35 U.S.C. 111(c) and 37 CFR 1.57(a). Do not complete this section if application papers including a specification and any drawings are being filed. Any domestic benefit or foreign priority information must be provided in the appropriate section(s) below (i.e., "Domestic Benefit/National Stage Information" and "Foreign Priority Information").

For the purposes of a filing date under 37 CFR 1.53(b), the description and any drawings of the present application are replaced by this reference to the previously filed application, subject to conditions and requirements of 37 CFR 1.57(a).

Application number of the previously filed application	Filing date (YYYY-MM-DD)	Intellectual Property Authority or Country i

PTO/AIA/14 (01-22)
Approved for use through 05/31/2024. OMB 0651-0032
U.S. Patent and Trademark Office; U.S. DEPARTMENT OF COMMERCE
Under the Paperwork Reduction Act of 1995, no persons are required to respond to a collection of information unless it contains a valid OMB control number.

Application Data Sheet 37 CFR 1.76	Attorney Docket Number	LGES 3.3F-1654 CON CON
	Application Number	
Title of Invention	Secondary Battery And Method For Manufacturing The Same	

Publication Information:

☐	Request Early Publication (Fee required at time of Request 37 CFR 1.219)
☐	**Request Not to Publish.** I hereby request that the attached application not be published under 35 U.S.C. 122(b) and certify that the invention disclosed in the attached application **has not and will not** be the subject of an application filed in another country, or under a multilateral international agreement, that requires publication at eighteen months after filing.

Representative Information:

Representative information should be provided for all practitioners having a power of attorney in the application. Providing this information in the Application Data Sheet does not constitute a power of attorney in the application (see 37 CFR 1.32).
Either enter Customer Number or complete the Representative Name section below. If both sections are completed the customer Number will be used for the Representative Information during processing.

Please Select One:	◉ Customer Number	○ US Patent Practitioner	○ Limited Recognition (37 CFR 11.9)
Customer Number	86765		

Domestic Benefit/National Stage Information:

This section allows for the applicant to either claim benefit under 35 U.S.C. 119(e), 120, 121, 365(c), or 386(c) or indicate National Stage entry from a PCT application. Providing benefit claim information in the Application Data Sheet constitutes the specific reference required by 35 U.S.C. 119(e) or 120, and 37 CFR 1.78.
When referring to the current application, please leave the "Application Number" field blank.

Prior Application Status	Pending		Remove
Application Number	Continuity Type	Prior Application Number	Filing or 371(c) Date (YYYY-MM-DD)
	Continuation of	18/132719	2023-04-10

Prior Application Status	Patented			Remove	
Application Number	Continuity Type	Prior Application Number	Filing Date (YYYY-MM-DD)	Patent Number	Issue Date (YYYY-MM-DD)
18/132719	Continuation of	16/498751	2019-09-27	11652232	2023-05-16

Prior Application Status			Remove
Application Number	Continuity Type	Prior Application Number	Filing or 371(c) Date (YYYY-MM-DD)
16/498751	a 371 of international	PCT/KR2018/004366	2018-04-13

Additional Domestic Benefit/National Stage Data may be generated within this form by selecting the **Add** button. Add

PTO/AIA/14 (01-22)
Approved for use through 05/31/2024. OMB 0651-0032
U.S. Patent and Trademark Office; U.S. DEPARTMENT OF COMMERCE
Under the Paperwork Reduction Act of 1995, no persons are required to respond to a collection of information unless it contains a valid OMB control number.

Application Data Sheet 37 CFR 1.76	Attorney Docket Number	LGES 3.3F-1654 CON CON
	Application Number	
Title of Invention	Secondary Battery And Method For Manufacturing The Same	

Foreign Priority Information:

This section allows for the applicant to claim priority to a foreign application. Providing this information in the application data sheet constitutes the claim for priority as required by 35 U.S.C. 119(b) and 37 CFR 1.55. When priority is claimed to a foreign application that is eligible for retrieval under the priority document exchange program (PDX)[i] the information will be used by the Office to automatically attempt retrieval pursuant to 37 CFR 1.55(i)(1) and (2). Under the PDX program, applicant bears the ultimate responsibility for ensuring that a copy of the foreign application is received by the Office from the participating foreign intellectual property office, or a certified copy of the foreign priority application is filed, within the time period specified in 37 CFR 1.55(g)(1).

Remove

Application Number	Country[i]	Filing Date (YYYY-MM-DD)	Access Code[i] (if applicable)
10-2018-0043191	KR	2018-04-13	

Remove

Application Number	Country[i]	Filing Date (YYYY-MM-DD)	Access Code[i] (if applicable)
10-2017-0048645	KR	2017-04-14	

Additional Foreign Priority Data may be generated within this form by selecting the **Add** button. Add

Statement under 37 CFR 1.55 or 1.78 for AIA (First Inventor to File) Transition Applications

☐ This application (1) claims priority to or the benefit of an application filed before March 16, 2013 and (2) also contains, or contained at any time, a claim to a claimed invention that has an effective filing date on or after March 16, 2013.
NOTE: By providing this statement under 37 CFR 1.55 or 1.78, this application, with a filing date on or after March 16, 2013, will be examined under the first inventor to file provisions of the AIA.

PTO/AIA/14 (01-22)
Approved for use through 05/31/2024. OMB 0651-0032
U.S. Patent and Trademark Office; U.S. DEPARTMENT OF COMMERCE
Under the Paperwork Reduction Act of 1995, no persons are required to respond to a collection of information unless it contains a valid OMB control number.

Application Data Sheet 37 CFR 1.76	Attorney Docket Number	LGES 3.3F-1654 CON CON
	Application Number	
Title of Invention	Secondary Battery And Method For Manufacturing The Same	

Authorization or Opt-Out of Authorization to Permit Access:

When this Application Data Sheet is properly signed and filed with the application, applicant has provided written authority to permit a participating foreign intellectual property (IP) office access to the instant application-as-filed (see paragraph A in subsection 1 below) and the European Patent Office (EPO) access to any search results from the instant application (see paragraph B in subsection 1 below).

Should applicant choose not to provide an authorization identified in subsection 1 below, applicant **must opt-out** of the authorization by checking the corresponding box A or B or both in subsection 2 below.

NOTE: This section of the Application Data Sheet is **ONLY** reviewed and processed with the **INITIAL** filing of an application. After the initial filing of an application, an Application Data Sheet cannot be used to provide or rescind authorization for access by a foreign IP office(s). Instead, Form PTO/SB/39 or PTO/SB/69 must be used as appropriate.

1. Authorization to Permit Access by a Foreign Intellectual Property Office(s)

A. Priority Document Exchange (PDX) - Unless box A in subsection 2 (opt-out of authorization) is checked, the undersigned hereby **grants the USPTO authority** to provide the European Patent Office (EPO), the Japan Patent Office (JPO), the Korean Intellectual Property Office (KIPO), the State Intellectual Property Office of the People's Republic of China (SIPO), the World Intellectual Property Organization (WIPO), and any other foreign intellectual property office participating with the USPTO in a bilateral or multilateral priority document exchange agreement in which a foreign application claiming priority to the instant patent application is filed, access to: (1) the instant patent application-as-filed and its related bibliographic data, (2) any foreign or domestic application to which priority or benefit is claimed by the instant application and its related bibliographic data, and (3) the date of filing of this Authorization. See 37 CFR 1.14(h)(1).

B. Search Results from U.S. Application to EPO - Unless box B in subsection 2 (opt-out of authorization) is checked, the undersigned hereby **grants the USPTO authority** to provide the EPO access to the bibliographic data and search results from the instant patent application when a European patent application claiming priority to the instant patent application is filed. See 37 CFR 1.14(h)(2).

The applicant is reminded that the EPO's Rule 141(1) EPC (European Patent Convention) requires applicants to submit a copy of search results from the instant application without delay in a European patent application that claims priority to the instant application.

2. Opt-Out of Authorizations to Permit Access by a Foreign Intellectual Property Office(s)

☐ A. Applicant **DOES NOT** authorize the USPTO to permit a participating foreign IP office access to the instant application-as-filed. If this box is checked, the USPTO will not be providing a participating foreign IP office with any documents and information identified in subsection 1A above.

☐ B. Applicant **DOES NOT** authorize the USPTO to transmit to the EPO any search results from the instant patent application. If this box is checked, the USPTO will not be providing the EPO with search results from the instant application.

NOTE: Once the application has published or is otherwise publicly available, the USPTO may provide access to the application in accordance with 37 CFR 1.14.

PTO/AIA/14 (01-22)
Approved for use through 05/31/2024. OMB 0651-0032
U.S. Patent and Trademark Office; U.S. DEPARTMENT OF COMMERCE
Under the Paperwork Reduction Act of 1995, no persons are required to respond to a collection of information unless it contains a valid OMB control number.

Application Data Sheet 37 CFR 1.76	Attorney Docket Number	LGES 3.3F-1654 CON CON
	Application Number	
Title of Invention	Secondary Battery And Method For Manufacturing The Same	

Applicant Information:

Providing assignment information in this section does not substitute for compliance with any requirement of part 3 of Title 37 of CFR to have an assignment recorded by the Office.

Applicant 1 Remove

If the applicant is the inventor (or the remaining joint inventor or inventors under 37 CFR 1.45), this section should not be completed. The information to be provided in this section is the name and address of the legal representative who is the applicant under 37 CFR 1.43; or the name and address of the assignee, person to whom the inventor is under an obligation to assign the invention, or person who otherwise shows sufficient proprietary interest in the matter who is the applicant under 37 CFR 1.46. If the applicant is an applicant under 37 CFR 1.46 (assignee, person to whom the inventor is obligated to assign, or person who otherwise shows sufficient proprietary interest) together with one or more joint inventors, then the joint inventor or inventors who are also the applicant should be identified in this section.

Clear

- (●) Assignee
- ( ) Legal Representative under 35 U.S.C. 117
- ( ) Joint Inventor
- ( ) Person to whom the inventor is obligated to assign.
- ( ) Person who shows sufficient proprietary interest

If applicant is the legal representative, indicate the authority to file the patent application, the inventor is:

Name of the Deceased or Legally Incapacitated Inventor:

If the Applicant is an Organization check here. ☒

Organization Name	LG Energy Solution, Ltd.		
Mailing Address Information For Applicant:			
Address 1	Tower 1, 108, Yeoui-daero, Yeongdeungpo-gu		
Address 2			
City	Seoul	**State/Province**	
Country	KR	Postal Code	07335
Phone Number		Fax Number	
Email Address			

Additional Applicant Data may be generated within this form by selecting the Add button. Add

Assignee Information including Non-Applicant Assignee Information:

Providing assignment information in this section does not substitute for compliance with any requirement of part 3 of Title 37 of CFR to have an assignment recorded by the Office.

PTO/AIA/14 (01-22)
Approved for use through 05/31/2024. OMB 0651-0032
U.S. Patent and Trademark Office; U.S. DEPARTMENT OF COMMERCE
Under the Paperwork Reduction Act of 1995, no persons are required to respond to a collection of information unless it contains a valid OMB control number.

Application Data Sheet 37 CFR 1.76	Attorney Docket Number	LGES 3.3F-1654 CON CON
	Application Number	
Title of Invention	Secondary Battery And Method For Manufacturing The Same	

Assignee 1

Complete this section if assignee information, including non-applicant assignee information, is desired to be included on the patent application publication. An assignee-applicant identified in the "Applicant Information" section will appear on the patent application publication as an applicant. For an assignee-applicant, complete this section only if identification as an assignee is also desired on the patent application publication.

Remove

If the Assignee or Non-Applicant Assignee is an Organization check here. ☒

Organization Name	LG Energy Solution, Ltd.

Mailing Address Information For Assignee including Non-Applicant Assignee:

Address 1	Tower 1, 108, Yeoui-daero, Yeongdeungpo-gu		
Address 2			
City	Seoul	**State/Province**	
Country i	KR	Postal Code	07335
Phone Number		Fax Number	
Email Address			

Additional Assignee or Non-Applicant Assignee Data may be generated within this form by selecting the Add button. Add

Signature:

Remove

NOTE: This Application Data Sheet must be signed in accordance with 37 CFR 1.33(b). **However, if this Application Data Sheet is submitted with the INITIAL filing of the application and either box A or B is not checked in subsection 2 of the "Authorization or Opt-Out of Authorization to Permit Access" section, then this form must also be signed in accordance with 37 CFR 1.14(c).**

This Application Data Sheet **must** be signed by a patent practitioner if one or more of the applicants is a **juristic entity** (e.g., corporation or association). If the applicant is two or more joint inventors, this form must be signed by a patent practitioner, **all** joint inventors who are the applicant, or one or more joint inventor-applicants who have been given power of attorney (e.g., see USPTO Form PTO/AIA/81) on behalf of **all** joint inventor-applicants.

See 37 CFR 1.4(d) for the manner of making signatures and certifications.

Signature	/Joseph H. Karlin/			Date (YYYY-MM-DD)	2024-03-27
First Name	Joseph	Last Name	Karlin	Registration Number	62,471

Additional Signature may be generated within this form by selecting the Add button. Add

PTO/AIA/14 (01-22)
Approved for use through 05/31/2024. OMB 0651-0032
U.S. Patent and Trademark Office; U.S. DEPARTMENT OF COMMERCE
Under the Paperwork Reduction Act of 1995, no persons are required to respond to a collection of information unless it contains a valid OMB control number.

Application Data Sheet 37 CFR 1.76	Attorney Docket Number	LGES 3.3F-1654 CON CON
	Application Number	
Title of Invention	Secondary Battery And Method For Manufacturing The Same	

This collection of information is required by 37 CFR 1.76. The information is required to obtain or retain a benefit by the public which is to file (and by the USPTO to process) an application. Confidentiality is governed by 35 U.S.C. 122 and 37 CFR 1.14. This collection is estimated to take 23 minutes to complete, including gathering, preparing, and submitting the completed application data sheet form to the USPTO. Time will vary depending upon the individual case. Any comments on the amount of time you require to complete this form and/or suggestions for reducing this burden, should be sent to the Chief Information Officer, U.S. Patent and Trademark Office, U.S. Department of Commerce, P.O. Box 1450, Alexandria, VA 22313-1450. DO NOT SEND FEES OR COMPLETED FORMS TO THIS ADDRESS. **SEND TO: Commissioner for Patents, P.O. Box 1450, Alexandria, VA 22313-1450.**

Privacy Act Statement

The Privacy Act of 1974 (P.L. 93-579) requires that you be given certain information in connection with your submission of the attached form related to a patent application or patent. Accordingly, pursuant to the requirements of the Act, please be advised that: (1) the general authority for the collection of this information is 35 U.S.C. 2(b)(2); (2) furnishing of the information solicited is voluntary; and (3) the principal purpose for which the information is used by the U.S. Patent and Trademark Office is to process and/or examine your submission related to a patent application or patent. If you do not furnish the requested information, the U.S. Patent and Trademark Office may not be able to process and/or examine your submission, which may result in termination of proceedings or abandonment of the application or expiration of the patent.

The information provided by you in this form will be subject to the following routine uses:

1 The information on this form will be treated confidentially to the extent allowed under the Freedom of Information Act (5 U.S.C. 552) and the Privacy Act (5 U.S.C. 552a). Records from this system of records may be disclosed to the Department of Justice to determine whether the Freedom of Information Act requires disclosure of these records.

2. A record from this system of records may be disclosed, as a routine use, in the course of presenting evidence to a court, magistrate, or administrative tribunal, including disclosures to opposing counsel in the course of settlement negotiations.

3 A record in this system of records may be disclosed, as a routine use, to a Member of Congress submitting a request involving an individual, to whom the record pertains, when the individual has requested assistance from the Member with respect to the subject matter of the record.

4. A record in this system of records may be disclosed, as a routine use, to a contractor of the Agency having need for the information in order to perform a contract. Recipients of information shall be required to comply with the requirements of the Privacy Act of 1974, as amended, pursuant to 5 U.S.C. 552a(m).

5. A record related to an International Application filed under the Patent Cooperation Treaty in this system of records may be disclosed, as a routine use, to the International Bureau of the World Intellectual Property Organization, pursuant to the Patent CooperationTreaty.

6. A record in this system of records may be disclosed, as a routine use, to another federal agency for purposes of National Security review (35 U.S.C. 181) and for review pursuant to the Atomic Energy Act (42 U.S.C. 218(c)).

7. A record from this system of records may be disclosed, as a routine use, to the Administrator, General Services, or his/her designee, during an inspection of records conducted by GSA as part of that agency's responsibility to recommend improvements in records management practices and programs, under authority of 44 U.S.C. 2904 and 2906. Such disclosure shall be made in accordance with the GSA regulations governing inspection of records for this purpose, and any other relevant (i.e., GSA or Commerce) directive. Such disclosure shall not be used to make determinations about individuals.

8. A record from this system of records may be disclosed, as a routine use, to the public after either publication of the application pursuant to 35 U.S.C. 122(b) or issuance of a patent pursuant to 35 U.S.C. 151. Further, a record may be disclosed, subject to the limitations of 37 CFR 1.14, as a routine use, to the public if the record was filed in an application which became abandoned or in which the proceedings were terminated and which application is referenced by either a published application, an application open to public inspections or an issued patent.

9. A record from this system of records may be disclosed, as a routine use, to a Federal, State, or local law enforcement agency, if the USPTO becomes aware of a violation or potential violation of law or regulation.

DECLARATION AND ASSIGNMENT FOR UTILITY OR DESIGN APPLICATIONS	Attorney Docket Number:
Title of Invention	SECONDARY BATTERY AND METHOD FOR MANUFACTURING THE SAME

As the below named inventor(s) (hereinafter designated as the undersigned), I/We hereby declare that:

This declaration is directed to:

[X] The attached application, or

[ ] United States application or PCT international application number_____

filed on _____

The above-identified application was made or authorized to be made by me/us.

I/We believe that I am the original inventor or an original joint inventor of a claimed invention in the application.

I/We hereby acknowledge that any willful false statement made in this declaration is punishable under 18 U.S.C. 1001 by fine or imprisonment of not more than five (5) years, or both.

WHEREAS, the undersigned as a sole inventor (if only one name is listed below) or as a joint inventor (if plural names are listed below) has invented certain new and useful improvements in the application identified above.

AND, WHEREAS **LG CHEM, LTD.**, (hereinafter referred to as assignee), a corporation of Korea whose mailing address is 128, Yeoui-daero, Yeongdeungpo-gu, Seoul 07336, Republic of Korea is desirous of acquiring the entire right, title and interest in the same.

NOW, THEREFORE, in consideration of the sum of one dollar, the receipt wherof is acknowledged, and other good and valuable consideration, the undersigned hereby sell(s), assign(s) and set(s) over to said assignee my/our entire right, title and interest for the United States of America and all other countries in and to said invention and the aforesaid utility patent application and all original, divisional, continuation, substitute or reissue applications and patents applied for or granted therefor in the United States of America and all other countries, for said invention, including without limitation all applications and patents for said invention claiming priority or benefit of the aforesaid utility application pursuant to any law or treaty, and including all claims for damages by reason of past infringement with the right to sue for and collect the same for its own use and the use of its successors, assigns and legal representatives, and including the right to claim such priority or benefit and the Commissioner of Patents and Trademarks is hereby authorized and requested to issue all patents on said improvements or resulting therefrom to said assignee herein, as assignee of the entire interest therein; and the undersigned for me/us and my/our legal representatives, heirs and assigns do hereby agree and covenant without further remuneration, to execute and deliver all original, divisional, continuation, reissue and other applications for Letters Patent on said improvements and all assignments thereof to said assignee or its assigns, to communicate to said assignee or its representatives all facts known to the undersigned respecting said improvements, whenever requested, to testify in any interferences or other legal proceedings in which any of said applications or patents may become involved, to sign all lawful papers, make all rightful oaths, and to do generally everything necessary to aid assignee, its successors, assigns and nominees to obtain patent protection for said improvements in all countries, the expenses incident to said applications to be borne and paid by said assignee.

And I do hereby authorize my attorneys to insert on this deed the filing date and application number of said application when known.

FULL NAME OF INVENTOR(S)

Inventor one: **KIM, Jae Woong** Date: September 25, 2019

Signature: _____

[X] Additional inventors or a legal representative are being named on 1 additional form(s) attached hereto.

PLEASE SEE THE WARNINGS ON THE LAST PAGE OF THIS FORM.

2018-OPLC-1095PC/US

2916801

LG Chem

/zaixiong

SUPPLEMENTAL SHEET

DECLARATION AND ASSIGNMENT FOR UTILITY OR DESIGN APPLICATIONS	ADDITIONAL INVENTOR(S) Supplemental Sheet
Inventor two: KIM, Hyoung Kwon Signature:	Date: September 25, 2019
Inventor three: KIM, Sang Uck Signature:	Date: September 25, 2019
Inventor four: Signature:	Date:
Inventor five: Signature:	Date:
Inventor six: Signature:	Date:
Inventor seven: Signature:	Date:
Inventor eight: Signature:	Date:
Inventor nine: Signature:	Date:
Inventor ten: Signature:	Date:

WARNING:

According to 37 C.F.R. 1.63 (c), "[a] person may not execute an oath or declaration unless the person has reviewed and understands the contents of the application, including the claims and is aware of the duty to disclose to the Office all information known to be material to patentability as defined in 1.56."

Petitioner/applicant is cautioned to avoid submitting personal information in documents filed in a patent application that may contribute to identity theft. Personal information such as social security numbers, bank account numbers, or credit card numbers (other than a check or credit card authorization form PTO-2038 submitted for payment purposes) is never required by the USPTO to support a petition or an application. If this type of personal information is included in documents submitted to the USPTO, petitioners/applicants should consider redacting such personal information from the documents before submitting them to the USPTO. Petitioner/applicant is advised that the record of a patent application is available to the public after publication of the application (unless a non-publication request in compliance with 37 CFR 1.213(a) is made in the application) or issuance of a patent. Furthermore, the record from an abandoned application may also be available to the public if the application is referenced in a published application or an issued patent (see 37 CFR 1.14). Checks and credit card authorization forms PTO-2038 submitted for payment purposes are not retained in the application file and therefore are not publicly available.

LG Chem
DJ/hyoungkwon

I hereby certify that this paper (along with any paper referred to as being attached or enclosed) is being transmitted via the Office electronic filing system in accordance with 37 C.F.R. § 1.6(a)(4).

Dated: March 27, 2024
Electronic Signature for Joseph H. Karlin: /Joseph H. Karlin/

Docket No. LGES 3.3F-1654 CON CON
(PATENT)

IN THE UNITED STATES PATENT AND TRADEMARK OFFICE

In re Patent Application of:
Kim et al.

Application No.: Not Yet Assigned

Confirmation No.: N/A

Filed: Concurrently Herewith

Art Unit: N/A

For: Secondary Battery And Method For Manufacturing The Same

Examiner: Not Yet Assigned

COMMUNICATION REGARDING CERTIFIED COPY

Dear Commissioner:

The present application claims priority to one or more prior foreign applications under 35 U.S.C. § 119(b). Applicant hereby identifies prior-filed nonprovisional Application No. 16/498,751, for which a benefit is claimed under 35 U.S.C. §§ 120, 121, 365(c), or 386(c), as containing a certified copy of such foreign application(s). Accordingly, pursuant to 37 C.F.R. § 1.55(h), the requirement for timely filing a certified copy of the foreign application(s) is considered satisfied in this application.

All required fees are being paid via credit card. However, please charge any additional fees not already paid via credit card, and credit any overpayments to our Deposit Account No. 12-1095.

Dated: March 27, 2024

Respectfully submitted,

Electronic signature: /Joseph H. Karlin/
Joseph H. Karlin
Registration No.: 62,471
LERNER DAVID LLP
20 Commerce Dr.
Cranford, New Jersey 07016
(908) 654-5000
Attorney for Applicant

Doc Code: PA..
Document Description: Power of Attorney

PTO/AIA/82A (07-13)
Approved for use through 09/30/2025. OMB 0651-0035
U.S. Patent and Trademark Office; U.S. DEPARTMENT OF COMMERCE
Under the Paperwork Reduction Act of 1995, no persons are required to respond to a collection of information unless it displays a valid OMB control number.

TRANSMITTAL FOR POWER OF ATTORNEY TO ONE OR MORE REGISTERED PRACTITIONERS

NOTE: This form is to be submitted with the Power of Attorney by Applicant form (PTO/AIA/82B) to identify the application to which the Power of Attorney is directed, in accordance with 37 CFR 1.5, unless the application number and filing date are identified in the Power of Attorney by Applicant form. If neither form PTO/AIA/82A nor form PTO/AIA82B identifies the application to which the Power of Attorney is directed, the Power of Attorney will not be recognized in the application.

Application Number	Not Yet Assigned
Filing Date	Concurrently Herewith
First Named Inventor	Jae Woong Kim
Title	Secondary Battery And Method For Manufacturing The Same
Art Unit	N/A
Examiner Name	Not Yet Assigned
Attorney Docket Number	LGES 3.3F-1654 CON CON

SIGNATURE of Applicant or Patent Practitioner

Signature	/Joseph H. Karlin/	Date (Optional)	March 27, 2024
Name	Joseph H. Karlin	Registration Number	62,471
Title (if Applicant is a juristic entity)			
Applicant Name (if Applicant is a juristic entity)			

NOTE: This form must be signed in accordance with 37 CFR 1.33. See 37 CFR 1.4(d) for signature requirements and certifications. If more than one applicant, use multiple forms.

☐ *Total of 1 forms are submitted.

8023954

I hereby certify that this paper (along with any paper referred to as being attached or enclosed) is being transmitted via the Office electronic filing system in accordance with 37 C.F.R. § 1.6(a)(4).

Dated: March 27, 2024 Electronic Signature for Joseph H. Karlin: /Joseph H. Karlin/

Doc Code: PA..
Document Description: Power of Attorney

PTO/AIA/82B (07-13)
Approved for use through 11/30/2014. OMB 0651-0031
U.S. Patent and Trademark Office; U.S. DEPARTMENT OF COMMERCE
Under the Paperwork Reduction Act of 1995, no persons are required to respond to a collection of information unless it displays a valid OMB control number

POWER OF ATTORNEY BY APPLICANT

I hereby revoke all previous powers of attorney given in the application identified in either the attached transmittal letter or the boxes below.

Application Number	Filing Date

(Note: The boxes above may be left blank if information is provided on form PTO/AIA/82A.)

[x] I hereby appoint Patent Practitioner(s) associated with the following Customer Number as my/our attorney(s) or agent(s), and to transact all business in the United States Patent and Trademark Office connected therewith for the application referenced in the attached transmittal letter (form PTO/AIA/82A) or identified above: 86765

OR

[ ] I hereby appoint Practitioner(s) named in the attached list (form PTO/AIA/82C) as my/our attorney(s) or agent(s), and to transact all business in the United States Patent and Trademark Office connected therewith for the patent application referenced in the attached transmittal letter (form PTO/AIA/82A) or identified above. (Note: Complete form PTO/AIA/82C.)

Please recognize or change the correspondence address for the application identified in the attached transmittal letter to:

[x] The address associated with the above-mentioned Customer Number

OR

[ ] The address associated with Customer Number:

OR

Firm or Individual Name					
Address					
City		State		Zip	
Country					
Telephone		Email			

I am the Applicant (if the Applicant is a juristic entity, list the Applicant name in the box):

LG Energy Solution, Ltd.

[ ] Inventor or Joint Inventor (title not required below)

[ ] Legal Representative of a Deceased or Legally Incapacitated Inventor (title not required below)

[x] Assignee or Person to Whom the Inventor is Under an Obligation to Assign (provide signer's title if applicant is a juristic entity)

[ ] Person Who Otherwise Shows Sufficient Proprietary Interest (e.g., a petition under 37 CFR 1.46(b)(2) was granted in the application or is concurrently being filed with this document) (provide signer's title if applicant is a juristic entity)

SIGNATURE of Applicant for Patent

The undersigned (whose title is supplied below) is authorized to act on behalf of the applicant (e.g., where the applicant is a juristic entity).

Signature	Han Sun Lee	Date (Optional)	June 10, 2021
Name	LEE, Han-Sun		
Title	IP Department Leader		

NOTE: Signature - This form must be signed by the applicant in accordance with 37 CFR 1.33. See 37 CFR 1.4 for signature requirements and certifications. If more than one applicant, use multiple forms.

[x] Total of 1 forms are submitted.

Confidential
HO/yskim112

PTO/AIA/15 (10-17)
Approved for use through 05/31/2024. OMB 0651-0032
U.S. Patent and Trademark Office; U.S. DEPARTMENT OF COMMERCE
Under the Paperwork Reduction Act of 1995 no persons are required to respond to a collection of information unless it displays a valid OMB control number.

UTILITY PATENT APPLICATION TRANSMITTAL

(Only for new nonprovisional applications under 37 CFR 1.53(b))

Attorney Docket No.	LGES 3.3F-1654 CON CON
First Named Inventor	Jae Woong Kim
Title	Secondary Battery And Method For Manufacturing The Same
Priority Mail Express® Label No.	

APPLICATION ELEMENTS

See MPEP chapter 600 concerning utility patent application contents.

1. [ ] **Fee Transmittal Form** (PTO/SB/17 or equivalent)
2. [ ] **Applicant asserts small entity status.** See 37 CFR 1.27
3. [ ] **Applicant certifies micro entity status.** See 37 CFR 1.29. Applicant must attach form PTO/SB/15A or B or equivalent.
4. [X] **Specification** [*Total Pages* 20]
   Both the claims and abstract must start on a new page.
   (See MPEP § 608.01(a) for information on the preferred arrangement)
5. [X] **Drawing(s)** (35 U.S.C. 113) [*Total Sheets* 9]
6. **Inventor's Oath or Declaration** [*Total Pages* 2]
   (including substitute statements under 37 CFR 1.64 and assignments serving as an oath or declaration under 37 CFR 1.63(e))
   a. [ ] Newly executed (original or copy)
   b. [X] A copy from a prior application (37 CFR 1.63(d))
7. [X] **Application Data Sheet** * *See note below.*
   See 37 CFR 1.76 (PTO/AIA/14 or equivalent)
8. **CD-ROM or CD-R** in duplicate, large table, or Computer Program (*Appendix*)
   [ ] Landscape Table on CD
9. **Nucleotide and/or Amino Acid Sequence Submission** (*if applicable, items a. – c. are required*)
   a. [ ] Computer Readable Form (CRF)
   b. [ ] Specification Sequence Listing on:
      i. [ ] CD-ROM or CD-R (2 copies); or
      ii. [ ] Paper
   c. [ ] Statements verifying identity of above copies

ADDRESS TO: **Commissioner for Patents**
P.O. Box 1450
Alexandria, VA 22313-1450

ACCOMPANYING APPLICATION PAPERS

10. [ ] **Assignment Papers** (cover sheet & document(s))
    Name of Assignee
11. [ ] **37 CFR 3.73(c) Statement** (*when there is an assignee*) [X] **Power of Attorney**
12. [ ] **English Translation Document** (*if applicable*)
13. [ ] **Information Disclosure Statement** (PTO/SB/08 or PTO-1449)
    [ ] Copies of citations attached
14. [ ] **Preliminary Amendment**
15. [ ] **Return Receipt Postcard** (*MPEP § 503*) (*Should be specifically itemized*)
16. [ ] **Certified Copy of Priority Document(s)** (*if foreign priority is claimed*)
17. [ ] **Nonpublication Request** Under 35 U.S.C. 122(b)(2)(B)(i). Applicant must attach form PTO/SB/35 or equivalent.
18. [X] **Other:** Communication Regarding Certified Copy

***Note:** (1) Benefit claims under 37 CFR 1.78 and foreign priority claims under 1.55 **must** be included in an Application Data Sheet (ADS).
(2) For applications filed under 35 U.S.C. 111, the application must contain an ADS specifying the applicant if the applicant is an assignee, person to whom the inventor is under an obligation to assign, or person who otherwise shows sufficient proprietary interest in the matter. See 37 CFR 1.46(b).

19. CORRESPONDENCE ADDRESS

[X] The address associated with Customer Number: 86765 **OR** [ ] Correspondence address below

Name					
Address					
City		State		Zip Code	
Country		Telephone		Email	

Signature	/Joseph H. Karlin/	Date	March 27, 2024
Name (Print/Type)	Joseph H. Karlin	Registration No. (Attorney/Agent)	62,471

I hereby certify that this paper (along with any paper referred to as being attached or enclosed) is being transmitted via the Office electronic filing system in accordance with 37 C.F.R. § 1.6(a)(4).

Dated: March 27, 2024 Electronic Signature for Joseph H. Karlin: /Joseph H. Karlin/

SECONDARY BATTERY AND METHOD FOR MANUFACTURING THE SAME

CROSS-REFERENCE TO RELATED APPLICATIONS

[0001] This application is a continuation of U.S. Application No. 18/132,719, filed on April 10, 2023, which is a continuation of U.S. Application No. 16/498,751, filed on September 27, 2019, now U.S. Patent No. 11,652,232, which is a continuation of PCT International Application No. PCT/KR2018/004366, filed on April 13, 2018, which claims priority from Korean Patent Application Nos. 10-2017-0048645, filed on April 14, 2017, and 10-2018-0043191, filed on April 13, 2018, the disclosures of which are hereby incorporated by reference herein in their entireties.

TECHNICAL FIELD

[0002] The present invention relates to a secondary battery and a method for manufacturing the same, and more particularly, to a secondary battery in which an electrode tab increases in mechanical strength and a method for manufacturing the same.

BACKGROUND ART

[0003] Batteries (cells) that generate electric energy through physical or chemical reaction to supply the generated electric energy to the outside are used when AC power to be supplied to the building is not obtained, or DC power is required according to the living environments surrounded by various electric and electronic devices.

[0004] Among such batteries, primary batteries and secondary batteries, which are chemical batteries using chemical reaction, are being generally used. The primary batteries are consumable batteries which are collectively referred to as dry batteries. Also, secondary batteries are rechargeable batteries that are manufactured by using a material in a redox process between current and a substance is repeatable several times. When the reduction reaction is performed on the material by the current, power is charged, and when

the oxidation reaction is performed on the material, power is discharged. Such the charging-discharging is repeatedly performed to generate electricity.

[0005] A lithium ion battery of the secondary batteries is manufactured through the following processes. An active material is applied to each of a positive electrode conductive foil and a negative electrode conductive foil at a predetermined thickness, and a separator is disposed between the positive electrode conductive foil and the negative electrode conductive foil, and then, an electrode assembly, in which the positive electrode conductive foil, the separator, and the negative electrode conductive foil are wound several times in a jelly-roll or cylindrical shape, is accommodated into a cylindrical or prismatic can, a pouch, and the like to seal the resultant product, thereby manufacturing the lithium ion battery.

[0006] An electrode assembly and a secondary battery including the same according to the related art is disclosed in Korea Patent Publication No. 10-2012-0006389.

[0007] In the secondary battery according to the related art, it is necessary to apply a technology in which a metal having low resistance is applied to a negative electrode tab, or the number of electrode tabs increases in order to develop a low resistance cell.

[0008] A negative multi-tab structure developed by this necessity was a two-tab structure in which an electrode tab is attached to each of a core and an outer portion or a three-tab structure in which an electrode tab is applied to each of a core and an outer portion, and a middle tab is attached to an intermediate portion.

[0009] However, in order to attach the middle tab on the characteristics of the jelly roll, a non-coating portion has to be formed on a predetermined portion in the middle of the electrode. Thus, there is a problem that the battery capacity is lowered due to an increase of the non-coating portion.

DISCLOSURE OF THE INVENTION

TECHNICAL PROBLEM

[0010] Therefore, the present invention has been made to solve the abovementioned problem, and an object of the prevent invention is to provide a secondary battery in which a multi-tab is formed while minimizing a non-coating portion and a method for manufacturing the same.

[0011] Also, an object of the present invention is to provide a secondary battery which is capable of increasing in mechanical strength while notching electrode foil to form an electrode tab and a method for manufacturing the same.

TECHNICAL SOLUTION

[0012] A secondary battery according to an embodiment of the present invention includes: an electrode provided with a coating portion coated with an active material on an electrode collector and a non-coating portion on which the active material is not applied to the electrode collector in a longitudinal direction of the electrode collector; and a notching tab part extending from the coating portion in a width direction of the electrode collector perpendicular to the longitudinal direction and not coated with the active material, the notching tab part having a wound state including two or more overlapping layers when the electrode is in a wound state.

[0013] The notching tab part may continuously extend across 1/3 or more of a total length of the coating portion in the longitudinal direction.

[0014] When the electrode is in the wound state, the notching tab part may form a plurality of notching tabs.

[0015] The foil tab may have a width of 4 mm to 120 mm.

[0016] The electrode may be accommodated in a can member, and each of the plurality of notching tabs may be in a bent state and may be connected to the can member.

[0017] A bent part formed by bending each of the plurality of notching tabs may be bonded to the can member.

[0018] The secondary battery may further include an insulation member disposed between the bent parts and an end of the electrode.

[0019] The secondary battery may further include an electrode tab attached to the non-coating portion.

[0020] When the electrode is in the wound state, the notching tab part may form a plurality of notching tabs, and the electrode may be accommodated in a can member, and each of the plurality of notching tabs may be in a bent state and may overlap the electrode tab.

[0021] The electrode tab and the plurality of notching tabs may be bonded together to the can member.

[0022] A method for manufacturing a secondary battery according to an embodiment of the present invention includes: a preparation step of preparing an electrode provided with a coating portion coated with an active material on an electrode collector and a non-coating portion on which the active material is not applied to the electrode collector in a longitudinal direction of the electrode collector; a notching tab part formation step of notching the electrode to form a notching tab part not coated with the active material and extending from the coating portion in a width direction of the electrode collector perpendicular to the longitudinal direction, the notching tab part extending across 1/3 or more of a total length of the coating portion in the longitudinal direction; a winding step including stacking the electrode with a separator and with another electrode having a polarity different from that of the electrode and winding the electrode, the separator, and the another electrode to form an electrode assembly; a notching tab formation step of cutting the notching tab part of the electrode assembly to form a plurality of notching tabs; and an installation step of

accommodating the electrode assembly into a can member and bonding each of the plurality of notching tabs to the can member.

[0023] The electrode may be a negative electrode.

[0024] During the preparation step, the coating portion coated with the active material on the electrode collector and the non-coating portion on which the active material is not applied may be arranged in parallel to each other in the width direction of the electrode collector.

[0025] during the notching tab part formation step, the notching tab part on which the active material is not applied may be notched in the width direction of the coating portion while cutting the coating portion and the non-coating portion in the longitudinal direction of the electrode collector.

[0026] During the notching tab part formation step, notching may be performed so that the notching tab part on which the active material is not applied is notched in the width direction of the coating portion while cutting the electrode.

[0027] During the notching tab formation step, the notching tab part may be cut using a laser.

[0028] During the installation step, the electrode assembly may be accommodated in the can member in a state in which the plurality of notching tabs are bent and bonded to the can member.

[0029] During the installation step, a bent portion of each of the plurality of notching tabs may be welded to the can member.

[0030] During the installation step, bent portions of each of the plurality of notching tabs may overlap each other and may be bonded to the can member together.

[0031] During the winding step, the notching tab part may be wound to form two or more overlapping layers.

ADVANTAGEOUS EFFECTS

[0032] According to the present invention, the multi-tab may be formed while minimizing the formation of the non-coating portion.

[0033] According to the present invention, the multi-tab may be formed to minimize the electric resistance.

[0034] According to the present invention, the formation of the non-coating part may be minimized to secure the battery capacity.

[0035] According to the present invention, the notching tab may overlap each other to form two or more layers while forming the notching tab that is the foil tab from the electrode foil, whereby increasing in mechanical strength.

[0036] According to the present invention, the notching tab that is the foil tab may increase in mechanical strength to prevent the notching tab from being broken in the bent state, and thus, the notching tab may be boned to the can member in the bent state to secure the reliability in electrical connection and improve the bonding performance.

[0037] According to the present invention, the notching tab and the electrode tab may be bonded to the can member at the same to secure the welding processability.

[0038] According to the present invention, the plurality of notching tabs may be formed outside the electrode assembly to install the insulation member between the plurality of notching tabs and the end of the electrode assembly, and thereby to prevent the notching tabs and the electrode assembly from coming into contact with each other, thereby improving the safety.

BRIEF DESCRIPTION OF THE DRAWINGS

[0039] FIG. 1 is a development view of an electrode according to an embodiment of the present invention.

[0040] FIG. 2 is a perspective view illustrating a state in which the electrode of FIG. 1

is wound.

[0041] FIG. 3 is a perspective view illustrating a state in which a notching tab part is cut to form a notching tab in FIG. 2.

[0042] FIG. 4 is a projective perspective view when seeing through a can member in a state in which an electrode assembly is installed in the can member according to an embodiment of the present invention.

[0043] FIG. 5 is a bottom view of only the electrode assembly in FIG. 4.

[0044] FIG. 6 is a flowchart successively illustrating a method for manufacturing a secondary battery according to an embodiment of the present invention.

[0045] FIG. 7 is a plan view illustrating a state in which a coating portion and a non-coating portion, which are formed in a longitudinal direction of an electrode collector, are arranged in parallel to each other in a width direction of the electrode collector according to an embodiment of the present invention.

[0046] FIG. 8 is a bottom view illustrating a state in which a notching tab and an electrode tab are bonded to each other according to another embodiment of the present invention.

[0047] FIG. 9 is a side view of FIG. 8.

MODE FOR CARRYING OUT THE INVENTION

[0048] Hereinafter, a secondary battery and a method for manufacturing the same according to exemplary embodiments of the present invention will be described in detail with reference to the accompanying drawings.

[0049] Terms or words used in the specification and claims should not be construed as limited to a lexical meaning, and should be understood as appropriate notions by the inventor based on that he/she is able to define terms to describe his/her invention in the best way to be seen by others. Therefore, embodiments and drawings described herein are simply

exemplary and not exhaustive, and it will be understood that various equivalents may be made to take the place of the embodiments.

[0050] In the drawings, the dimension of each of components or a specific portion constituting the component is exaggerated, omitted, or schematically illustrated for convenience in description and clarity. Thus, the dimension of each element does not entirely reflect an actual size. Moreover, detailed descriptions related to well-known functions or configurations will be ruled out in order not to unnecessarily obscure subject matters of the present invention.

[0051] FIG. 1 is a development view of an electrode according to an embodiment of the present invention, and FIG. 2 is a perspective view illustrating a state in which the electrode of FIG. 1 is wound.

[0052] As illustrated in FIGS. 1 and 2, a secondary battery according to an embodiment of the present invention includes an electrode on which a coating portion 110 coated with an active material a on an electrode collector and a non-coating portion 120, on which the active material a is not applied on the electrode collector, are disposed in a longitudinal direction of the electrode collector and a notching tab part 111 extending from the coating portion 110 in a width direction of the electrode collector without being coated with the active material a and overlapping each other to form two or more layers when the electrode 100 is wound (FIG. 2 illustrates a notching tab part 111 that overlap each other to form two or more layers).

[0053] The foil tab may overlap each other to form two or more layers while forming the notching tab part that is a foil tab from electrode foil of the electrode collector, thereby increasing in mechanical strength.

[0054] The electrode 100 may be one of a positive electrode coated with a positive electrode active material and a negative electrode coated with a negative electrode active material. The electrode assembly 1 may be manufactured by stacking the positive electrode,

the negative electrode, and a separator several times so that the separator is disposed between the positive electrode and the negative electrode.

[0055] Also, the electrode assembly 1 may be manufactured by winding a stack, in which the positive electrode, the separator, and the negative electrode are stacked, in a jelly-roll shape.

[0056] The positive electrode may be an aluminum electrode collector and include a positive electrode coating portion coated with the positive electrode active material and a positive electrode non-coating portion which is not coated with the positive electrode active material.

[0057] The positive electrode active material may include a lithium-containing transition metal oxide such as $LiCoO_2$, $LiNiO_2$, $LiMnO_2$, and $LiMnO_4$ or a lithium chalcogenide compound.

[0058] The positive electrode coating portion may be manufactured, for example, by applying the positive electrode active material to a portion of at least one surface of the aluminum electrode collector, and the remaining portion of the aluminum electrode collector, which is not coated with the positive electrode active material, may be the positive electrode non-coating portion.

[0059] The negative electrode may be a copper electrode collector and include a negative electrode coating portion coated with the negative electrode active material and a negative electrode non-coating portion which is not coated with the negative electrode active material.

[0060] The negative electrode active material may be a carbon material such as crystalline carbon, amorphous carbon, a carbon composite, and a carbon fiber, a lithium metal, or a lithium alloy.

[0061] The negative electrode coating portion may be manufactured, for example, by

applying the negative electrode active material to a portion of at least one surface of the copper electrode collector, and the remaining portion of the copper electrode collector, which is not coated with the negative electrode active material, may be the negative electrode non-coating portion.

[0062] The separator may be manufactured by applying a polyvinylidene fluoride-hexafluoropropylene copolymer (PVDF-HFP co-polymer) to one base material selected from the group consisting of, for example, polyethylene (PE), polystyrene (PS), polypropylene (PP), and a copolymer of polyethylene (PE) and polypropylene.

[0063] As described above, the electrode 100 according to the present invention may be one of the positive electrode and the negative electrode, which constitute the electrode assembly 1. Particularly, the electrode 100 may be one, which requires further reduction in resistance, of the positive electrode and the negative electrode.

[0064] In the present invention, the negative electrode will be described as an example.

[0065] The electrode 100 has one end on which the non-coating portion 120 is formed. An electrode tab 121 may be attached to the non-coating portion 120 formed on the one end of the electrode 100.

[0066] The notching tab part 111 may be formed by notching the electrode 100 to extend from the coating portion 110 of the electrode 100 in the width direction. Only the electrode collector may be formed to extend on an area corresponding to 1/3 or more of the total length of the coating portion 110 of the electrode 100, and the active material a may not be applied.

[0067] Only the active material a may be removed from the coating portion 110 extending from the electrode 100 to form the notching tab part 111. Alternatively, only the electrode foil may extend without applying the active material a on the area of the coating portion 110 of the electrode 100 to form the notching tab part 111.

[0068] Thus, there may be an effect of forming the multi-tab while minimizing the

formation of the non-coating portion, and the formation of the non-coating portion may be minimized to secure the battery capacity.

[0069] FIG. 3 is a perspective view illustrating a state in which the notching tab part is cut to form the notching tab in FIG. 2.

[0070] As illustrated in FIG. 3, the notching tab part 111 may be cut in the wound state to form a plurality of notching tabs 111a. When the number of notching tabs 111a increases, the electrode tab may decrease in resistance.

[0071] Here, one notching tab 111a may have a width of 4 mm to 5 mm. This is done for a reason in which, if the notching tab 111a has a width that is less than 4 mm, the mechanical strength may be weakened, and if the notching tab 111a has a width exceeding 5 mm, deformation in the process of bonding for the electrical connection with the can member may be difficult.

[0072] The notching tab 111a that is the foil tab may increase in mechanical strength to prevent the notching tab 111a from being broken in the bent state, and thus, the notching tab 111a may be bonded to the can member in the bent state to secure the reliability in electrical connection and improve the bonding performance.

[0073] FIG. 4 is a projective perspective view when seeing through the can member in a state in which the electrode assembly is installed in the can member according to an embodiment of the present invention, and FIG. 5 is a bottom view of only the electrode assembly in FIG. 4.

[0074] As illustrated in FIGS. 4 and 5, in the electrode assembly 1 of the secondary battery according to the present invention, a bent part of the notching tab 111a may be welded to be coupled to the can member 10 so that the notching tab 111a is electrically connected to the can member 10 in a state in which the notching tab 111a is bent while being accommodated in the can member 10.

[0075] The notching tab 111a may be bent to allow an end of the notching tab 111a to be coupled to a center of a bottom surface of the can member 10. Thus, the plurality of notching tabs 111a may be electrically connected to each other while the electrical connection is smooth to minimize the electric resistance.

[0076] FIG. 8 is a bottom view illustrating a state in which a notching tab and an electrode tab are bonded to each other according to another embodiment of the present invention, and FIG. 9 is a side view of FIG. 8.

[0077] As illustrated in FIGS. 8 and 9, in a secondary battery according to another embodiment of the present invention, a notching tab part 111 of an electrode assembly 1, in which an electrode 100 is wound, may be cut to form a plurality of notching tabs 111a. The plurality of notching tabs 111a may be bent and then be connected to overlap an electrode tab 121 formed on a central portion of an end of the electrode assembly 1.

[0078] Also, the electrode assembly 1 may be accommodated in a can member 10, and the plurality of notching tabs 111a connected to overlap the electrode tab 121 may be bonded to the can member 10 together with the electrode tab 121 through welding.

[0079] As described above, in the secondary battery according to another embodiment of the present invention, since the plurality of notching tabs 111a and the electrode tab 121 are welded together to the can member 10 in the state in which the notching tabs 111a and the electrode tab 121 are connected to overlap each other, welding processability may be easily secured.

[0080] In the secondary battery according to another embodiment of the present invention, when an end of the electrode assembly 1 has a length ranging of 16 mm to 21 mm, a notching length of each of the plurality of notching tabs 111a may range of 8 mm to 11 mm. When the notching length of the notching tab 111a is less than 8 mm, the length of the notching tab 111a may be shortened, and the notching tab 111a may be bent. Thus, it

may be difficult to allow the notching tab 111a to overlap the electrode tab 121 formed on a central portion of an end of the electrode assembly 1. Also, when the notching length of the notching tab 111a exceeds 11 mm, the length of the notching tab 111a may be unnecessarily lengthened to increase in cost due to waste of the material and in space occupied by the notching tab 111a within the can member 10. Thus, an amount of electrolyte filled into the can member 10 may be reduced to deteriorate capacity. Preferably, the notching tab 111a may have a notching length of 9 mm to 10 mm.

[0081] In the secondary battery according to another embodiment of the present invention, an insulation member 130 may be formed between a bent part of the notching tab 111a and an end of the electrode assembly 1 in which the electrode 100 is wound.

[0082] The insulation member 130 may insulate the notching tab 111a from the end of the electrode assembly 1 to prevent the notching tab 111a from coming into contact with the electrode assembly 1.

[0083] The plurality of notching tabs 111a may be formed on an outer portion of the end of the electrode assembly to prevent the insulation member 130 from interfering with the end of the electrode assembly 1.

[0084] The plurality of notching tabs 111a may be formed on the outside of the electrode assembly so that the insulation member 130 is installed between the plurality of notching tabs 111a and the end of the electrode assembly 1. Thus, the contact between the notching tab 111a and the electrode assembly 1 may be prevented to improve safety.

[0085] Hereinafter, a method of manufacturing a secondary battery according an embodiment of the present invention will be described in detail with reference to the accompanying drawings.

[0086] FIG. 6 is a flowchart successively illustrating a method for manufacturing a secondary battery according to an embodiment of the present invention.

[0087] As illustrated in FIG. 6, a method for manufacturing a secondary battery according to an embodiment of the present invention includes a preparation step (S1), a notching tab part formation step (S2), a winding step (s3), a notching tab formation step (S4), and an installation step (S5).

[0088] The preparation step (S1) is a step of preparing an electrode 100 in which a coating portion 110 coated with an active material a on an electrode collector and a non-coating portion 120 on which the active material a is not applied are provided in a longitudinal direction of the electrode collector.

[0089] Here, the electrode 100 may be a negative electrode.

[0090] FIG. 7 is a plan view illustrating a state in which the coating portion and the non-coating portion, which are formed in the longitudinal direction of the electrode collector, are arranged in parallel to each other in a width direction of the electrode collector according to an embodiment of the present invention.

[0091] As illustrated in FIG. 7, in the preparation step (S1), the coating portion 110 and the non-coating portion 120, which are formed in a longitudinal direction L of the electrode collector may be arranged in parallel to each other in the width direction W of the electrode collector.

[0092] In the notching tab part formation step (S2) is a step of notching the electrode 10 to form a notching tab part 111 extending in a state in which the active material is not formed in the width direction W of the coating portion 111 on an area of the electrode 100 corresponding to 1/3 or more of a length of the coating portion 110.

[0093] As described above, the notching of the notching tab part 111 in the electrode 100 may a step of notching a portion of the non-coating portion on which the active material a is not applied and which is formed in the width direction W of the coating portion 11 while cutting the electrode 100 in the electrode collector to form a notch tab part 11.

[0094] Also, when the coating portion 100 and the non-coating portion 120, which are formed in the longitudinal direction L of the electrode collector, are arranged in parallel to each other in the width direction W of the electrode collector, the non-coating portion on which the active material is not applied and which is formed between one coating portion 110 and the other coating portion 110a, which are arranged in parallel to each other in the width direction W may be notched while cutting the coating portion 110 and the non-coating portion 120, which are arranged in parallel to each other to form the notching tab part 111 in the width direction W of the coating portion 110.

[0095] The winding step (S3) may be a step of stacking the electrode 100, on which the notching tab part 111 is formed, on the separator and the other electrode having a polarity different from that of the electrode 100 and winding the stack to form the electrode assembly 1.

[0096] While the electrode 100 is wound, the notching tab part 111 may overlap each other to form two or more layers.

[0097] The notching tab formation step (S4) may be a step of cutting the notching tab part 111 to form a plurality of notching tabs 111a.

[0098] The notching tabs 111a formed by cutting the notching tab part 111 may overlap each other to two or more layers like the notching tab part 111.

[0099] Here, the cutting of the notching tab part 111 may be maximized in work efficiency by using laser.

[00100] The insulation step (S5) may be a step of accommodating the electrode assembly 1 into the can member 10 to bond the notching tabs 111a to the can member 10.

[00101] In the installation step (S5), each of the notching tab 111a may be bent so that the welding is easily performed while the notching tab 111a is electrically connected to the can member 10 to allow the electrode assembly 1 to be accommodated in the can member

10 in the state in which the notching tab 111a is bent.

[00102] Here, since the notching tab 111a has the two or more layers, even though the notching tab 111a is bent, mechanical strength may be maintained, and thus, the notching tab may not be easily broken.

[00103] The bent notching tab 111a may have an end that faces a center of a bottom surface of the can member 10.

[00104] The coupling between the bottom surface of the can member 10 and the notching tab 111a may be performed by welding the bent part of the notching tab 111a to the bottom surface of the can member 10.

[00105] In addition, according to another embodiment of the present invention, the bent portions of the plurality of notching tabs 111a may overlap the central portion of the end of the electrode assembly 1 so as to be welded and bonded to the can member 10 together with the electrode tab 121 formed on the central portion of the end of the electrode 1 at the same time.

[00106] Although the secondary battery and the method for manufacturing the same according to the present invention has been described above with reference to the exemplary drawings, various changes and modifications may be made thereto by one skilled in the art without departing from the scope and spirit of the invention as set forth in the appended claims.

CLAIMS

1. A secondary battery comprising:

a can member; and

an electrode assembly having a positive electrode, a negative electrode and a separator disposed therebetween, which are wounded together in a wound state in a jelly-roll shape,

wherein the positive electrode or the negative electrode comprises:

an electrode collector;

a coating portion coated with an active material on the electrode collector; and

a non-coating portion on which the active material is not applied to the electrode collector, the non-coating portion being adjacent to the coating portion in a width direction perpendicular to a longitudinal direction of the electrode collector, the non-coating portion having a plurality of notching tabs formed therein such that each of the plurality of notching tabs extends away from the coating portion in the width direction,

wherein, when the electrode assembly is in the wound state, the plurality of notching tabs are circumferentially distributed about a central axis of the electrode assembly,

wherein the plurality of notching tabs are bent in a radial direction towards the central axis so as to form an overlapping region in which the plurality of notching tabs overlap one another in the width direction of the electrode collector, and

wherein at least some of the plurality of notching tabs are directly bonded to others of the plurality of notching tabs at the overlapping region so as to define an electrical connection between the plurality of notching tabs and the can member.

2. The secondary battery of claim 1, wherein the overlapping region is positioned along the central axis of the electrode assembly.

3. The secondary battery of claim 1, wherein the plurality of notching tabs is formed on a radially outer portion of an end of the electrode assembly, the radially outer portion being remote from the central axis.

4. The secondary battery of claim 1, wherein the plurality of notching tabs are bonded to the can member by welding.

5. The secondary battery of claim 1, further comprising an insulation member disposed between bent parts of the plurality of notching tabs and an end of the electrode assembly.

6. The secondary battery of claim 5, wherein the overlapping region is disposed on the insulation member.

7. The secondary battery of claim 1, wherein the plurality of notching tabs are equally circumferentially distributed about the central axis of the electrode assembly.

8. The secondary battery of claim 1, further comprising an electrode tab attached to a non-coated portion at one end of the electrode collector in the longitudinal direction, wherein bent parts of the plurality of notching tabs overlap the electrode tab, and the bent parts of the plurality of notching tabs and the electrode tab are electrically connected to the can member by welding.

9. The secondary battery of claim 1, wherein the bent parts of the plurality of notching tabs overlap an electrode tab coupled to the electrode assembly and extending from

a central portion of an end of the electrode assembly, the central portion being positioned along the central axis.

10. The secondary battery of claim 1, wherein the notching tab part continuously extends across 1/3 or more of a total length of the coating portion in the longitudinal direction.

11. The secondary battery of claim 1, wherein each of the plurality of notching tabs has a width of 4 mm to 5 mm.

12. The secondary battery of claim 1, wherein each of the plurality of notching tabs overlaps with at least another one of the plurality of notching tabs in the wound state so as to define a respective plurality of layer portions, each of the layer portions extending only over a same circumferentially extending angle about the central axis of the electrode assembly.

13. The secondary battery of claim 1, wherein the plurality of notching tabs are circumferentially distributed at at least ten locations about the central axis of the electrode assembly.

14. The secondary battery of claim 1, wherein the plurality of notching tabs includes at least twenty notching tabs.

ABSTRACT

The present invention relates to a secondary battery in which an electrode tab is improved in mechanical strength and a method for manufacturing the same. Also, the secondary battery according to the present invention includes: an electrode provided with a coating portion coated with an active material on an electrode collector and a non-coating portion on which the active material is not applied to the electrode collector, the non-coating portion being adjacent to the coating portion in a width direction perpendicular to a longitudinal direction of the electrode collector, the non-coating portion having a plurality of notching tabs formed therein such that each of the plurality of notching tabs extends away from the coating portion in a width direction. When the electrode assembly is in the wound state, the plurality of notching tabs are circumferentially distributed about a central axis of the electrode assembly.

SECONDARY BATTERY AND METHOD FOR MANUFACTURING THE SAME

CROSS-REFERENCE TO RELATED APPLICATIONS

[0001] This application is a continuation of U.S. Application No. 18/132,719, filed on April 10, 2023, which is a continuation of U.S. Application No. 16/498,751, filed on September 27, 2019, now U.S. Patent No. 11,652,232, which is a continuation of PCT International Application No. PCT/KR2018/004366, filed on April 13, 2018, which claims priority from Korean Patent Application Nos. 10-2017-0048645, filed on April 14, 2017, and 10-2018-0043191, filed on April 13, 2018, the disclosures of which are hereby incorporated by reference herein in their entireties.

TECHNICAL FIELD

[0002] The present invention relates to a secondary battery and a method for manufacturing the same, and more particularly, to a secondary battery in which an electrode tab increases in mechanical strength and a method for manufacturing the same.

BACKGROUND ART

[0003] Batteries (cells) that generate electric energy through physical or chemical reaction to supply the generated electric energy to the outside are used when AC power to be supplied to the building is not obtained, or DC power is required according to the living environments surrounded by various electric and electronic devices.

[0004] Among such batteries, primary batteries and secondary batteries, which are chemical batteries using chemical reaction, are being generally used. The primary batteries are consumable batteries which are collectively referred to as dry batteries. Also, secondary batteries are rechargeable batteries that are manufactured by using a material in a redox process between current and a substance is repeatable several times. When the reduction reaction is performed on the material by the current, power is charged, and when

the oxidation reaction is performed on the material, power is discharged. Such the charging-discharging is repeatedly performed to generate electricity.

[0005] A lithium ion battery of the secondary batteries is manufactured through the following processes. An active material is applied to each of a positive electrode conductive foil and a negative electrode conductive foil at a predetermined thickness, and a separator is disposed between the positive electrode conductive foil and the negative electrode conductive foil, and then, an electrode assembly, in which the positive electrode conductive foil, the separator, and the negative electrode conductive foil are wound several times in a jelly-roll or cylindrical shape, is accommodated into a cylindrical or prismatic can, a pouch, and the like to seal the resultant product, thereby manufacturing the lithium ion battery.

[0006] An electrode assembly and a secondary battery including the same according to the related art is disclosed in Korea Patent Publication No. 10-2012-0006389.

[0007] In the secondary battery according to the related art, it is necessary to apply a technology in which a metal having low resistance is applied to a negative electrode tab, or the number of electrode tabs increases in order to develop a low resistance cell.

[0008] A negative multi-tab structure developed by this necessity was a two-tab structure in which an electrode tab is attached to each of a core and an outer portion or a three-tab structure in which an electrode tab is applied to each of a core and an outer portion, and a middle tab is attached to an intermediate portion.

[0009] However, in order to attach the middle tab on the characteristics of the jelly roll, a non-coating portion has to be formed on a predetermined portion in the middle of the electrode. Thus, there is a problem that the battery capacity is lowered due to an increase of the non-coating portion.

DISCLOSURE OF THE INVENTION

TECHNICAL PROBLEM

[0010] Therefore, the present invention has been made to solve the abovementioned problem, and an object of the prevent invention is to provide a secondary battery in which a multi-tab is formed while minimizing a non-coating portion and a method for manufacturing the same.

[0011] Also, an object of the present invention is to provide a secondary battery which is capable of increasing in mechanical strength while notching electrode foil to form an electrode tab and a method for manufacturing the same.

TECHNICAL SOLUTION

[0012] A secondary battery according to an embodiment of the present invention includes: an electrode provided with a coating portion coated with an active material on an electrode collector and a non-coating portion on which the active material is not applied to the electrode collector in a longitudinal direction of the electrode collector; and a notching tab part extending from the coating portion in a width direction of the electrode collector perpendicular to the longitudinal direction and not coated with the active material, the notching tab part having a wound state including two or more overlapping layers when the electrode is in a wound state.

[0013] The notching tab part may continuously extend across 1/3 or more of a total length of the coating portion in the longitudinal direction.

[0014] When the electrode is in the wound state, the notching tab part may form a plurality of notching tabs.

[0015] The foil tab may have a width of 4 mm to 120 mm.

[0016] The electrode may be accommodated in a can member, and each of the plurality of notching tabs may be in a bent state and may be connected to the can member.

[0017] A bent part formed by bending each of the plurality of notching tabs may be bonded to the can member.

[0018] The secondary battery may further include an insulation member disposed between the bent parts and an end of the electrode.

[0019] The secondary battery may further include an electrode tab attached to the non-coating portion.

[0020] When the electrode is in the wound state, the notching tab part may form a plurality of notching tabs, and the electrode may be accommodated in a can member, and each of the plurality of notching tabs may be in a bent state and may overlap the electrode tab.

[0021] The electrode tab and the plurality of notching tabs may be bonded together to the can member.

[0022] A method for manufacturing a secondary battery according to an embodiment of the present invention includes: a preparation step of preparing an electrode provided with a coating portion coated with an active material on an electrode collector and a non-coating portion on which the active material is not applied to the electrode collector in a longitudinal direction of the electrode collector; a notching tab part formation step of notching the electrode to form a notching tab part not coated with the active material and extending from the coating portion in a width direction of the electrode collector perpendicular to the longitudinal direction, the notching tab part extending across 1/3 or more of a total length of the coating portion in the longitudinal direction; a winding step including stacking the electrode with a separator and with another electrode having a polarity different from that of the electrode and winding the electrode, the separator, and the another electrode to form an electrode assembly; a notching tab formation step of cutting the notching tab part of the electrode assembly to form a plurality of notching tabs; and an installation step of

accommodating the electrode assembly into a can member and bonding each of the plurality of notching tabs to the can member.

[0023] The electrode may be a negative electrode.

[0024] During the preparation step, the coating portion coated with the active material on the electrode collector and the non-coating portion on which the active material is not applied may be arranged in parallel to each other in the width direction of the electrode collector.

[0025] during the notching tab part formation step, the notching tab part on which the active material is not applied may be notched in the width direction of the coating portion while cutting the coating portion and the non-coating portion in the longitudinal direction of the electrode collector.

[0026] During the notching tab part formation step, notching may be performed so that the notching tab part on which the active material is not applied is notched in the width direction of the coating portion while cutting the electrode.

[0027] During the notching tab formation step, the notching tab part may be cut using a laser.

[0028] During the installation step, the electrode assembly may be accommodated in the can member in a state in which the plurality of notching tabs are bent and bonded to the can member.

[0029] During the installation step, a bent portion of each of the plurality of notching tabs may be welded to the can member.

[0030] During the installation step, bent portions of each of the plurality of notching tabs may overlap each other and may be bonded to the can member together.

[0031] During the winding step, the notching tab part may be wound to form two or more overlapping layers.

ADVANTAGEOUS EFFECTS

[0032] According to the present invention, the multi-tab may be formed while minimizing the formation of the non-coating portion.

[0033] According to the present invention, the multi-tab may be formed to minimize the electric resistance.

[0034] According to the present invention, the formation of the non-coating part may be minimized to secure the battery capacity.

[0035] According to the present invention, the notching tab may overlap each other to form two or more layers while forming the notching tab that is the foil tab from the electrode foil, whereby increasing in mechanical strength.

[0036] According to the present invention, the notching tab that is the foil tab may increase in mechanical strength to prevent the notching tab from being broken in the bent state, and thus, the notching tab may be boned to the can member in the bent state to secure the reliability in electrical connection and improve the bonding performance.

[0037] According to the present invention, the notching tab and the electrode tab may be bonded to the can member at the same to secure the welding processability.

[0038] According to the present invention, the plurality of notching tabs may be formed outside the electrode assembly to install the insulation member between the plurality of notching tabs and the end of the electrode assembly, and thereby to prevent the notching tabs and the electrode assembly from coming into contact with each other, thereby improving the safety.

BRIEF DESCRIPTION OF THE DRAWINGS

[0039] FIG. 1 is a development view of an electrode according to an embodiment of the present invention.

[0040] FIG. 2 is a perspective view illustrating a state in which the electrode of FIG. 1

is wound.

[0041] FIG. 3 is a perspective view illustrating a state in which a notching tab part is cut to form a notching tab in FIG. 2.

[0042] FIG. 4 is a projective perspective view when seeing through a can member in a state in which an electrode assembly is installed in the can member according to an embodiment of the present invention.

[0043] FIG. 5 is a bottom view of only the electrode assembly in FIG. 4.

[0044] FIG. 6 is a flowchart successively illustrating a method for manufacturing a secondary battery according to an embodiment of the present invention.

[0045] FIG. 7 is a plan view illustrating a state in which a coating portion and a non-coating portion, which are formed in a longitudinal direction of an electrode collector, are arranged in parallel to each other in a width direction of the electrode collector according to an embodiment of the present invention.

[0046] FIG. 8 is a bottom view illustrating a state in which a notching tab and an electrode tab are bonded to each other according to another embodiment of the present invention.

[0047] FIG. 9 is a side view of FIG. 8.

MODE FOR CARRYING OUT THE INVENTION

[0048] Hereinafter, a secondary battery and a method for manufacturing the same according to exemplary embodiments of the present invention will be described in detail with reference to the accompanying drawings.

[0049] Terms or words used in the specification and claims should not be construed as limited to a lexical meaning, and should be understood as appropriate notions by the inventor based on that he/she is able to define terms to describe his/her invention in the best way to be seen by others. Therefore, embodiments and drawings described herein are simply

exemplary and not exhaustive, and it will be understood that various equivalents may be made to take the place of the embodiments.

[0050] In the drawings, the dimension of each of components or a specific portion constituting the component is exaggerated, omitted, or schematically illustrated for convenience in description and clarity. Thus, the dimension of each element does not entirely reflect an actual size. Moreover, detailed descriptions related to well-known functions or configurations will be ruled out in order not to unnecessarily obscure subject matters of the present invention.

[0051] FIG. 1 is a development view of an electrode according to an embodiment of the present invention, and FIG. 2 is a perspective view illustrating a state in which the electrode of FIG. 1 is wound.

[0052] As illustrated in FIGS. 1 and 2, a secondary battery according to an embodiment of the present invention includes an electrode on which a coating portion 110 coated with an active material a on an electrode collector and a non-coating portion 120, on which the active material a is not applied on the electrode collector, are disposed in a longitudinal direction of the electrode collector and a notching tab part 111 extending from the coating portion 110 in a width direction of the electrode collector without being coated with the active material a and overlapping each other to form two or more layers when the electrode 100 is wound (FIG. 2 illustrates a notching tab part 111 that overlap each other to form two or more layers).

[0053] The foil tab may overlap each other to form two or more layers while forming the notching tab part that is a foil tab from electrode foil of the electrode collector, thereby increasing in mechanical strength.

[0054] The electrode 100 may be one of a positive electrode coated with a positive electrode active material and a negative electrode coated with a negative electrode active material. The electrode assembly 1 may be manufactured by stacking the positive electrode,

the negative electrode, and a separator several times so that the separator is disposed between the positive electrode and the negative electrode.

[0055] Also, the electrode assembly 1 may be manufactured by winding a stack, in which the positive electrode, the separator, and the negative electrode are stacked, in a jelly-roll shape.

[0056] The positive electrode may be an aluminum electrode collector and include a positive electrode coating portion coated with the positive electrode active material and a positive electrode non-coating portion which is not coated with the positive electrode active material.

[0057] The positive electrode active material may include a lithium-containing transition metal oxide such as $LiCoO_2$, $LiNiO_2$, $LiMnO_2$, and $LiMnO_4$ or a lithium chalcogenide compound.

[0058] The positive electrode coating portion may be manufactured, for example, by applying the positive electrode active material to a portion of at least one surface of the aluminum electrode collector, and the remaining portion of the aluminum electrode collector, which is not coated with the positive electrode active material, may be the positive electrode non-coating portion.

[0059] The negative electrode may be a copper electrode collector and include a negative electrode coating portion coated with the negative electrode active material and a negative electrode non-coating portion which is not coated with the negative electrode active material.

[0060] The negative electrode active material may be a carbon material such as crystalline carbon, amorphous carbon, a carbon composite, and a carbon fiber, a lithium metal, or a lithium alloy.

[0061] The negative electrode coating portion may be manufactured, for example, by

applying the negative electrode active material to a portion of at least one surface of the copper electrode collector, and the remaining portion of the copper electrode collector, which is not coated with the negative electrode active material, may be the negative electrode non-coating portion.

[0062] The separator may be manufactured by applying a polyvinylidene fluoride-hexafluoropropylene copolymer (PVDF-HFP co-polymer) to one base material selected from the group consisting of, for example, polyethylene (PE), polystyrene (PS), polypropylene (PP), and a copolymer of polyethylene (PE) and polypropylene.

[0063] As described above, the electrode 100 according to the present invention may be one of the positive electrode and the negative electrode, which constitute the electrode assembly 1. Particularly, the electrode 100 may be one, which requires further reduction in resistance, of the positive electrode and the negative electrode.

[0064] In the present invention, the negative electrode will be described as an example.

[0065] The electrode 100 has one end on which the non-coating portion 120 is formed. An electrode tab 121 may be attached to the non-coating portion 120 formed on the one end of the electrode 100.

[0066] The notching tab part 111 may be formed by notching the electrode 100 to extend from the coating portion 110 of the electrode 100 in the width direction. Only the electrode collector may be formed to extend on an area corresponding to 1/3 or more of the total length of the coating portion 110 of the electrode 100, and the active material a may not be applied.

[0067] Only the active material a may be removed from the coating portion 110 extending from the electrode 100 to form the notching tab part 111. Alternatively, only the electrode foil may extend without applying the active material a on the area of the coating portion 110 of the electrode 100 to form the notching tab part 111.

[0068] Thus, there may be an effect of forming the multi-tab while minimizing the

formation of the non-coating portion, and the formation of the non-coating portion may be minimized to secure the battery capacity.

[0069] FIG. 3 is a perspective view illustrating a state in which the notching tab part is cut to form the notching tab in FIG. 2.

[0070] As illustrated in FIG. 3, the notching tab part 111 may be cut in the wound state to form a plurality of notching tabs 111a. When the number of notching tabs 111a increases, the electrode tab may decrease in resistance.

[0071] Here, one notching tab 111a may have a width of 4 mm to 5 mm. This is done for a reason in which, if the notching tab 111a has a width that is less than 4 mm, the mechanical strength may be weakened, and if the notching tab 111a has a width exceeding 5 mm, deformation in the process of bonding for the electrical connection with the can member may be difficult.

[0072] The notching tab 111a that is the foil tab may increase in mechanical strength to prevent the notching tab 111a from being broken in the bent state, and thus, the notching tab 111a may be bonded to the can member in the bent state to secure the reliability in electrical connection and improve the bonding performance.

[0073] FIG. 4 is a projective perspective view when seeing through the can member in a state in which the electrode assembly is installed in the can member according to an embodiment of the present invention, and FIG. 5 is a bottom view of only the electrode assembly in FIG. 4.

[0074] As illustrated in FIGS. 4 and 5, in the electrode assembly 1 of the secondary battery according to the present invention, a bent part of the notching tab 111a may be welded to be coupled to the can member 10 so that the notching tab 111a is electrically connected to the can member 10 in a state in which the notching tab 111a is bent while being accommodated in the can member 10.

[0075] The notching tab 111a may be bent to allow an end of the notching tab 111a to be coupled to a center of a bottom surface of the can member 10. Thus, the plurality of notching tabs 111a may be electrically connected to each other while the electrical connection is smooth to minimize the electric resistance.

[0076] FIG. 8 is a bottom view illustrating a state in which a notching tab and an electrode tab are bonded to each other according to another embodiment of the present invention, and FIG. 9 is a side view of FIG. 8.

[0077] As illustrated in FIGS. 8 and 9, in a secondary battery according to another embodiment of the present invention, a notching tab part 111 of an electrode assembly 1, in which an electrode 100 is wound, may be cut to form a plurality of notching tabs 111a. The plurality of notching tabs 111a may be bent and then be connected to overlap an electrode tab 121 formed on a central portion of an end of the electrode assembly 1.

[0078] Also, the electrode assembly 1 may be accommodated in a can member 10, and the plurality of notching tabs 111a connected to overlap the electrode tab 121 may be bonded to the can member 10 together with the electrode tab 121 through welding.

[0079] As described above, in the secondary battery according to another embodiment of the present invention, since the plurality of notching tabs 111a and the electrode tab 121 are welded together to the can member 10 in the state in which the notching tabs 111a and the electrode tab 121 are connected to overlap each other, welding processability may be easily secured.

[0080] In the secondary battery according to another embodiment of the present invention, when an end of the electrode assembly 1 has a length ranging of 16 mm to 21 mm, a notching length of each of the plurality of notching tabs 111a may range of 8 mm to 11 mm. When the notching length of the notching tab 111a is less than 8 mm, the length of the notching tab 111a may be shortened, and the notching tab 111a may be bent. Thus, it

may be difficult to allow the notching tab 111a to overlap the electrode tab 121 formed on a central portion of an end of the electrode assembly 1. Also, when the notching length of the notching tab 111a exceeds 11 mm, the length of the notching tab 111a may be unnecessarily lengthened to increase in cost due to waste of the material and in space occupied by the notching tab 111a within the can member 10. Thus, an amount of electrolyte filled into the can member 10 may be reduced to deteriorate capacity. Preferably, the notching tab 111a may have a notching length of 9 mm to 10 mm.

[0081] In the secondary battery according to another embodiment of the present invention, an insulation member 130 may be formed between a bent part of the notching tab 111a and an end of the electrode assembly 1 in which the electrode 100 is wound.

[0082] The insulation member 130 may insulate the notching tab 111a from the end of the electrode assembly 1 to prevent the notching tab 111a from coming into contact with the electrode assembly 1.

[0083] The plurality of notching tabs 111a may be formed on an outer portion of the end of the electrode assembly to prevent the insulation member 130 from interfering with the end of the electrode assembly 1.

[0084] The plurality of notching tabs 111a may be formed on the outside of the electrode assembly so that the insulation member 130 is installed between the plurality of notching tabs 111a and the end of the electrode assembly 1. Thus, the contact between the notching tab 111a and the electrode assembly 1 may be prevented to improve safety.

[0085] Hereinafter, a method of manufacturing a secondary battery according an embodiment of the present invention will be described in detail with reference to the accompanying drawings.

[0086] FIG. 6 is a flowchart successively illustrating a method for manufacturing a secondary battery according to an embodiment of the present invention.

[0087] As illustrated in FIG. 6, a method for manufacturing a secondary battery according to an embodiment of the present invention includes a preparation step (S1), a notching tab part formation step (S2), a winding step (s3), a notching tab formation step (S4), and an installation step (S5).

[0088] The preparation step (S1) is a step of preparing an electrode 100 in which a coating portion 110 coated with an active material a on an electrode collector and a non-coating portion 120 on which the active material a is not applied are provided in a longitudinal direction of the electrode collector.

[0089] Here, the electrode 100 may be a negative electrode.

[0090] FIG. 7 is a plan view illustrating a state in which the coating portion and the non-coating portion, which are formed in the longitudinal direction of the electrode collector, are arranged in parallel to each other in a width direction of the electrode collector according to an embodiment of the present invention.

[0091] As illustrated in FIG. 7, in the preparation step (S1), the coating portion 110 and the non-coating portion 120, which are formed in a longitudinal direction L of the electrode collector may be arranged in parallel to each other in the width direction W of the electrode collector.

[0092] In the notching tab part formation step (S2) is a step of notching the electrode 10 to form a notching tab part 111 extending in a state in which the active material is not formed in the width direction W of the coating portion 111 on an area of the electrode 100 corresponding to 1/3 or more of a length of the coating portion 110.

[0093] As described above, the notching of the notching tab part 111 in the electrode 100 may a step of notching a portion of the non-coating portion on which the active material a is not applied and which is formed in the width direction W of the coating portion 11 while cutting the electrode 100 in the electrode collector to form a notch tab part 11.

[0094] Also, when the coating portion 100 and the non-coating portion 120, which are formed in the longitudinal direction L of the electrode collector, are arranged in parallel to each other in the width direction W of the electrode collector, the non-coating portion on which the active material is not applied and which is formed between one coating portion 110 and the other coating portion 110a, which are arranged in parallel to each other in the width direction W may be notched while cutting the coating portion 110 and the non-coating portion 120, which are arranged in parallel to each other to form the notching tab part 111 in the width direction W of the coating portion 110.

[0095] The winding step (S3) may be a step of stacking the electrode 100, on which the notching tab part 111 is formed, on the separator and the other electrode having a polarity different from that of the electrode 100 and winding the stack to form the electrode assembly 1.

[0096] While the electrode 100 is wound, the notching tab part 111 may overlap each other to form two or more layers.

[0097] The notching tab formation step (S4) may be a step of cutting the notching tab part 111 to form a plurality of notching tabs 111a.

[0098] The notching tabs 111a formed by cutting the notching tab part 111 may overlap each other to two or more layers like the notching tab part 111.

[0099] Here, the cutting of the notching tab part 111 may be maximized in work efficiency by using laser.

[00100] The insulation step (S5) may be a step of accommodating the electrode assembly 1 into the can member 10 to bond the notching tabs 111a to the can member 10.

[00101] In the installation step (S5), each of the notching tab 111a may be bent so that the welding is easily performed while the notching tab 111a is electrically connected to the can member 10 to allow the electrode assembly 1 to be accommodated in the can member

10 in the state in which the notching tab 111a is bent.

[00102] Here, since the notching tab 111a has the two or more layers, even though the notching tab 111a is bent, mechanical strength may be maintained, and thus, the notching tab may not be easily broken.

[00103] The bent notching tab 111a may have an end that faces a center of a bottom surface of the can member 10.

[00104] The coupling between the bottom surface of the can member 10 and the notching tab 111a may be performed by welding the bent part of the notching tab 111a to the bottom surface of the can member 10.

[00105] In addition, according to another embodiment of the present invention, the bent portions of the plurality of notching tabs 111a may overlap the central portion of the end of the electrode assembly 1 so as to be welded and bonded to the can member 10 together with the electrode tab 121 formed on the central portion of the end of the electrode 1 at the same time.

[00106] Although the secondary battery and the method for manufacturing the same according to the present invention has been described above with reference to the exemplary drawings, various changes and modifications may be made thereto by one skilled in the art without departing from the scope and spirit of the invention as set forth in the appended claims.

CLAIMS

1. A secondary battery comprising:

a can member; and

an electrode assembly having a positive electrode, a negative electrode and a separator disposed therebetween, which are wounded together in a wound state in a jelly-roll shape,

wherein the positive electrode or the negative electrode comprises:

an electrode collector;

a coating portion coated with an active material on the electrode collector; and

a non-coating portion on which the active material is not applied to the electrode collector, the non-coating portion being adjacent to the coating portion in a width direction perpendicular to a longitudinal direction of the electrode collector, the non-coating portion having a plurality of notching tabs formed therein such that each of the plurality of notching tabs extends away from the coating portion in the width direction,

wherein, when the electrode assembly is in the wound state, the plurality of notching tabs are circumferentially distributed about a central axis of the electrode assembly,

wherein the plurality of notching tabs are bent in a radial direction towards the central axis so as to form an overlapping region in which the plurality of notching tabs overlap one another in the width direction of the electrode collector, and

wherein at least some of the plurality of notching tabs are directly bonded to others of the plurality of notching tabs at the overlapping region so as to define an electrical connection between the plurality of notching tabs and the can member.

2. The secondary battery of claim 1, wherein the overlapping region is positioned along the central axis of the electrode assembly.

3. The secondary battery of claim 1, wherein the plurality of notching tabs is formed on a radially outer portion of an end of the electrode assembly, the radially outer portion being remote from the central axis.

4. The secondary battery of claim 1, wherein the plurality of notching tabs are bonded to the can member by welding.

5. The secondary battery of claim 1, further comprising an insulation member disposed between bent parts of the plurality of notching tabs and an end of the electrode assembly.

6. The secondary battery of claim 5, wherein the overlapping region is disposed on the insulation member.

7. The secondary battery of claim 1, wherein the plurality of notching tabs are equally circumferentially distributed about the central axis of the electrode assembly.

8. The secondary battery of claim 1, further comprising an electrode tab attached to a non-coated portion at one end of the electrode collector in the longitudinal direction, wherein bent parts of the plurality of notching tabs overlap the electrode tab, and the bent parts of the plurality of notching tabs and the electrode tab are electrically connected to the can member by welding.

9. The secondary battery of claim 1, wherein the bent parts of the plurality of notching tabs overlap an electrode tab coupled to the electrode assembly and extending from

a central portion of an end of the electrode assembly, the central portion being positioned along the central axis.

10. The secondary battery of claim 1, wherein the notching tab part continuously extends across 1/3 or more of a total length of the coating portion in the longitudinal direction.

11. The secondary battery of claim 1, wherein each of the plurality of notching tabs has a width of 4 mm to 5 mm.

12. The secondary battery of claim 1, wherein each of the plurality of notching tabs overlaps with at least another one of the plurality of notching tabs in the wound state so as to define a respective plurality of layer portions, each of the layer portions extending only over a same circumferentially extending angle about the central axis of the electrode assembly.

13. The secondary battery of claim 1, wherein the plurality of notching tabs are circumferentially distributed at at least ten locations about the central axis of the electrode assembly.

14. The secondary battery of claim 1, wherein the plurality of notching tabs includes at least twenty notching tabs.

ABSTRACT

The present invention relates to a secondary battery in which an electrode tab is improved in mechanical strength and a method for manufacturing the same. Also, the secondary battery according to the present invention includes: an electrode provided with a coating portion coated with an active material on an electrode collector and a non-coating portion on which the active material is not applied to the electrode collector, the non-coating portion being adjacent to the coating portion in a width direction perpendicular to a longitudinal direction of the electrode collector, the non-coating portion having a plurality of notching tabs formed therein such that each of the plurality of notching tabs extends away from the coating portion in a width direction. When the electrode assembly is in the wound state, the plurality of notching tabs are circumferentially distributed about a central axis of the electrode assembly.

UNITED STATES
PATENT AND TRADEMARK OFFICE

P.O. Box 1450
Alexandria, VA 22313 - 1450
www.uspto.gov

ELECTRONIC PAYMENT RECEIPT

APPLICATION #	RECEIPT DATE / TIME	ATTORNEY DOCKET #
18/618,609	**03/27/2024 04:28:32 PM Z ET**	**LGES 3.3F-1654 CON CON**

Title of Invention

Secondary Battery And Method For Manufacturing The Same

Application Information

APPLICATION TYPE	Utility - Nonprovisional Application under 35 USC 111(a)	PATENT #	-
CONFIRMATION #	3847	FILED BY	Sharon McGee
PATENT CENTER #	64862281	AUTHORIZED BY	Kevin Kocun
CUSTOMER #	86765	FILING DATE	-
CORRESPONDENCE ADDRESS	-	FIRST NAMED INVENTOR	Jae Woong Kim

Payment Information

PAYMENT METHOD	PAYMENT TRANSACTION ID	PAYMENT AUTHORIZED BY
CARD / 1060	**E20243QG29016005**	**Sharon McGee**

FEE CODE	DESCRIPTION	ITEM PRICE($)	QUANTITY	ITEM TOTAL($)
1111	UTILITY PATENT APPL. SEARCH FEE	700.00	1	700.00
1011	BASIC FILING FEE - UTILITY (PAPER FILING ALSO REQUIRES NON-ELECTRONIC FILING FEE UNDER 1.16(T))	320.00	1	320.00
1311	PATENT APPL. EXAMINATION FEE	800.00	1	800.00
			TOTAL AMOUNT:	**$1,820.00**

This Acknowledgement Receipt evidences receipt on the noted date by the USPTO of the indicated documents, characterized by the applicant, and including page counts, where applicable. It serves as evidence of receipt similar to a Post Card, as described in MPEP 503.

New Applications Under 35 U.S.C. 111

If a new application is being filed and the application includes the necessary components for filing date (see 37 CFR 1.53(b)-(d) and MPEP 506), a Filing Receipt (37 CFR 1.54) will be issued in due course and the date shown on this Acknowledgement Receipt will establish the filing date of the application

National Stage of an International Application under 35 U.S.C. 371

If a timely submission to enter the national stage of an international application is compliant with the conditions of 35 U.S.C. 371 and other applicable requirements a Form PCT/DO/EO/903 indicating acceptance of the application as a national stage submission under 35 U.S.C. 371 will be issued in addition to the Filing Receipt, in due course.

New International Application Filed with the USPTO as a Receiving Office

If a new international application is being filed and the international application includes the necessary components for an international filing date (see PCT Article 11 and MPEP 1810), a Notification of the International Application Number and of the International Filing Date (Form PCT/RO/105) will be issued in due course, subject to prescriptions concerning national security, and the date shown on this Acknowledgement Receipt will establish the international filing date of the application.

File History Content Report

The following content is missing from the original file history record obtained from the United States Patent and Trademark Office. No additional information is available.

Document Date - 2024-03-27

Document Title - Applicant Communication Re: Entity Status Set to Undiscounted (Initial Default Setting or Status Change)

This page is not part of the official USPTO record. It has been determined that content identified on this document is missing from the original file history record.

File History Content Report

The following content is missing from the original file history record obtained from the United States Patent and Trademark Office. No additional information is available.

Document Date - 2024-04-10

Document Title - Pre-Exam Formalities Notice

This page is not part of the official USPTO record. It has been determined that content identified on this document is missing from the original file history record.

UNITED STATES PATENT AND TRADEMARK OFFICE

UNITED STATES DEPARTMENT OF COMMERCE
United States Patent and Trademark Office
Address: COMMISSIONER FOR PATENTS
P.O. Box 1450
Alexandria, Virginia 22313-1450
www.uspto.gov

APPLICATION NUMBER	FILING or 371(c) DATE	GRP ART UNIT	FIL FEE REC'D	ATTY.DOCKET.NO	TOT CLAIMS	IND CLAIMS
18/618,609	03/27/2024		1820	LGES 3.3F-1654 CON CON	14	1

CONFIRMATION NO. 3847

FILING RECEIPT

OC000000070703846

86765
LG
Lerner David LLP
20 Commerce Drive
Cranford, NJ 07016

Date Mailed: 04/10/2024

Receipt is acknowledged of this non-provisional utility patent application. The application will be taken up for examination in due course. Applicant will be notified as to the results of the examination. Any correspondence concerning the application must include the following identification information: the U.S. APPLICATION NUMBER, FILING DATE, NAME OF FIRST INVENTOR, and TITLE OF INVENTION. Fees transmitted by check or draft are subject to collection.

Please verify the accuracy of the data presented on this receipt. If an error is noted on this Filing Receipt, please submit a written request for a corrected Filing Receipt, including a properly marked-up ADS showing the changes with strike-through for deletions and underlining for additions. If you received a "Notice to File Missing Parts" or other Notice requiring a response for this application, please submit any request for correction to this Filing Receipt with your reply to the Notice. When the USPTO processes the reply to the Notice, the USPTO will generate another Filing Receipt incorporating the requested corrections provided that the request is grantable.

Inventor(s)

Jae Woong Kim, Daejeon, KOREA, REPUBLIC OF;
Hyoung Kwon Kim, Daejeon, KOREA, REPUBLIC OF;
Sang Uck Kim, Daejeon, JAPAN;

Applicant(s)

LG Energy Solution, Ltd., Seoul, KOREA, REPUBLIC OF;

Assignment For Published Patent Application

LG Energy Solution, Ltd., Seoul, KOREA, REPUBLIC OF

Power of Attorney: The patent practitioners associated with Customer Number 86765

Domestic Priority data as claimed by applicant

This application is a CON of 18/132,719 04/10/2023
which is a CON of 16/498,751 09/27/2019 PAT 11,652,232
which is a 371 of PCT/KR2018/004366 04/13/2018

Foreign Applications (You may be eligible to benefit from the Patent Prosecution Highway program at the USPTO. Please see http://www.uspto.gov for more information.)
REPUBLIC OF KOREA 10-2018-0043191 04/13/2018 No Access Code Provided
REPUBLIC OF KOREA 10-2017-0048645 04/14/2017 No Access Code Provided

Permission to Access Application via Priority Document Exchange: Yes

Permission to Access Search Results: Yes

Applicant may provide or rescind an authorization for access using Form PTO/SB/39 or Form PTO/SB/69 as appropriate.

If Required, Foreign Filing License Granted: 04/04/2024

The country code and number of your priority application, to be used for filing abroad under the Paris Convention, is **US 18/618,609**

Projected Publication Date: 07/18/2024

Non-Publication Request: No

Early Publication Request: No

Title

Secondary Battery And Method For Manufacturing The Same

Preliminary Class

Statement under 37 CFR 1.55 or 1.78 for AIA (First Inventor to File) Transition Applications: No

PROTECTING YOUR INVENTION OUTSIDE THE UNITED STATES

Since the rights granted by a U.S. patent extend only throughout the territory of the United States and have no effect in a foreign country, an inventor who wishes patent protection in another country must apply for a patent in a specific country or in regional patent offices. Applicants may wish to consider the filing of an international application under the Patent Cooperation Treaty (PCT). An international (PCT) application generally has the same effect as a regular national patent application in each PCT-member country. The PCT process **simplifies** the filing of patent applications on the same invention in member countries, but **does not result** in a grant of "an international patent" and does not eliminate the need of applicants to file additional documents and fees in countries where patent protection is desired.

Almost every country has its own patent law, and a person desiring a patent in a particular country must make an application for patent in that country in accordance with its particular laws. Since the laws of many countries differ in various respects from the patent law of the United States, applicants are advised to seek guidance from specific foreign countries to ensure that patent rights are not lost prematurely.

Applicants also are advised that in the case of inventions made in the United States, the Director of the USPTO must issue a license before applicants can apply for a patent in a foreign country. The filing of a U.S. patent application serves as a request for a foreign filing license. The application's filing receipt contains further information and guidance as to the status of applicant's license for foreign filing.

Applicants may wish to consult the USPTO booklet, "General Information Concerning Patents" (specifically, the section entitled "Treaties and Foreign Patents") for more information on timeframes and deadlines for filing foreign patent applications. The guide is available either by contacting the USPTO Contact Center at 800-786-9199, or it can be viewed on the USPTO website at http://www.uspto.gov/web/offices/pac/doc/general/index.html.

For information on preventing theft of your intellectual property (patents, trademarks and copyrights), you may wish to consult the U.S. Government website, http://www.stopfakes.gov. Part of a Department of Commerce initiative, this website includes self-help "toolkits" giving innovators guidance on how to protect intellectual property in specific

countries such as China, Korea and Mexico. For questions regarding patent enforcement issues, applicants may call the U.S. Government hotline at 1-866-999-HALT (1-866-999-4258).

LICENSE FOR FOREIGN FILING UNDER

Title 35, United States Code, Section 184

Title 37, Code of Federal Regulations, 5.11 & 5.15

GRANTED

The applicant has been granted a license under 35 U.S.C. 184, if the phrase "IF REQUIRED, FOREIGN FILING LICENSE GRANTED" followed by a date appears on this form. Such licenses are issued in all applications where the conditions for issuance of a license have been met, regardless of whether or not a license may be required as set forth in 37 CFR 5.15. The scope and limitations of this license are set forth in 37 CFR 5.15(a) unless an earlier license has been issued under 37 CFR 5.15(b). The license is subject to revocation upon written notification. The date indicated is the effective date of the license, unless an earlier license of similar scope has been granted under 37 CFR 5.13 or 5.14.

This license is to be retained by the licensee and may be used at any time on or after the effective date thereof unless it is revoked. This license is automatically transferred to any related applications(s) filed under 37 CFR 1.53(d). This license is not retroactive.

The grant of a license does not in any way lessen the responsibility of a licensee for the security of the subject matter as imposed by any Government contract or the provisions of existing laws relating to espionage and the national security or the export of technical data. Licensees should apprise themselves of current regulations especially with respect to certain countries, of other agencies, particularly the Office of Defense Trade Controls, Department of State (with respect to Arms, Munitions and Implements of War (22 CFR 121-128)); the Bureau of Industry and Security, Department of Commerce (15 CFR parts 730-774); the Office of Foreign AssetsControl, Department of Treasury (31 CFR Parts 500+) and the Department of Energy.

NOT GRANTED

No license under 35 U.S.C. 184 has been granted at this time, if the phrase "IF REQUIRED, FOREIGN FILING LICENSE GRANTED" DOES NOT appear on this form. Applicant may still petition for a license under 37 CFR 5.12, if a license is desired before the expiration of 6 months from the filing date of the application. If 6 months has lapsed from the filing date of this application and the licensee has not received any indication of a secrecy order under 35 U.S.C. 181, the licensee may foreign file the application pursuant to 37 CFR 5.15(b).

SelectUSA

The United States represents the largest, most dynamic marketplace in the world and is an unparalleled location for business investment, innovation, and commercialization of new technologies. The U.S. offers tremendous resources and advantages for those who invest and manufacture goods here. Through SelectUSA, our nation works to promote and facilitate business investment. SelectUSA provides information assistance to the international investor community; serves as an ombudsman for existing and potential investors; advocates on behalf of U.S. cities, states, and regions competing for global investment; and counsels U.S. economic development organizations on investment attraction best practices. To learn more about why the United States is the best country in the world to develop

technology, manufacture products, deliver services, and grow your business, visit http://www.SelectUSA.gov or call +1-202-482-6800.

United States Patent and Trademark Office

Under Secretary of Commerce for Intellectual Property and
Director of the United States Patent and Trademark Office

WELCOME TO THE UNITED STATES PATENT AND TRADEMARK OFFICE (USPTO)

*Congratulations on taking the first step to protect your invention. You can now advertise or mark any products covered by this application for your invention as **"Patent Pending"** for as long as this application is pending!*

We are here to help you on the rest of your journey.

New to the process? The Patent Basics page will take you from "What is a patent?" to assistance with the application process.

- **www.uspto.gov/PatentBasics**

Consider cost savings. You might qualify for small entity or micro entity status, which means a discount on most USPTO patent fees.

- **www.uspto.gov/EntityStatus**

Become a registered electronic filer (eFiler). You'll gain access to the full capabilities of Patent Center. As a registered eFiler, you can electronically view your submission, track the progress of your application, and respond to USPTO correspondence.

- **www.uspto.gov/NewPatentFilers**

Learn how to identify which of your creative ideas might be intellectual property assets and how to protect them by using the USPTO Intellectual Property (IP) Identifier.

- **ipidentifier.uspto.gov**

We also provide Pro Se Assistance, support specifically geared for **independent inventors without an attorney or agent.** Follow the link below, call us at 866-767-3848, or email **proseassistancecenter@uspto.gov**.

- **www.uspto.gov/ProSePatents**

Need help near you? We have regional offices across the country, as well as Patent and Trademark Resource Centers in libraries in nearly every state, with specialists standing by to help you at no cost.

- **www.uspto.gov/locations**
- **www.uspto.gov/ptrc**

Contact us:

- **General information:** USPTO Contact Center
  - **www.uspto.gov/help**
- **Patent Center:**
  Patent Electronic Business Center
  - **www.uspto.gov/EBC**
- **Pre or post-examination:** Application Assistance Unit
  - **www.uspto.gov/PatentAssistance**

Want to learn more?

- **Access our free services** all in one spot. Find all of our contact centers, nationwide services, events, education, and training.
  - **www.uspto.gov/FreeServices**
- **Connect with us** on Instagram, LinkedIn, Twitter, Facebook, and YouTube.
- **Hear about resources for startups, inventors, and entrepreneurs,** as well as our initiatives engaging women, the military community, and others. These programs offer helpful tips and tricks on identifying and managing your IP, finding options for funding, and expanding your network to support your business.
  - **www.uspto.gov/startups**
  - **www.uspto.gov/inventors**
  - **www.uspto.gov/initiatives**
- We hope you connect with us by subscribing to receive important notifications by email.
  - **www.uspto.gov/subscribe**

Kathi Vidal

Kathi Vidal
Under Secretary of Commerce for Intellectual Property and
Director of the United States Patent and Trademark Office

Derrick Brent
Deputy Under Secretary of Commerce for Intellectual Property and
Deputy Director of the United States Patent and Trademark Office

UNITED STATES
PATENT AND TRADEMARK OFFICE

P.O. Box 1450
Alexandria, VA 22313 - 1450
www.uspto.gov

ELECTRONIC ACKNOWLEDGEMENT RECEIPT

APPLICATION #	RECEIPT DATE / TIME	ATTORNEY DOCKET #
18/618,609	**04/15/2024 03:15:01 PM Z ET**	**LGES 3.3F-1654 CON CON**

Title of Invention

Secondary Battery And Method For Manufacturing The Same

Application Information

APPLICATION TYPE	Utility - Nonprovisional Application under 35 USC 111(a)	PATENT #	-
CONFIRMATION #	3847	FILED BY	Angelic Galindo
PATENT CENTER #	65097407	FILING DATE	03/27/2024
CUSTOMER #	86765	FIRST NAMED INVENTOR	Jae Woong Kim
CORRESPONDENCE ADDRESS	-	AUTHORIZED BY	David Kohn

Documents

TOTAL DOCUMENTS: 2

DOCUMENT	PAGES	DESCRIPTION	SIZE (KB)
LGES5172 - Information Disclosure Statement Fillable PDF.pdf	9	Information Disclosure Statement (IDS) Form (SB08)	1236 KB
IDS - Information Disclosure Statement - Reference in Previous Application LD-459.pdf	1	Transmittal Letter	22 KB

Digest

DOCUMENT	MESSAGE DIGEST(SHA-512)

LGES5172 - Information Disclosure Statement Fillable PDF.pdf	5CD10D1D4D36CA2D7B010467A36309C2D0C7F862D76ABEC04826FDFD357B3826C00C65425E75509B7237B3487432130AF0636500EF47CCAAD1C2623341257B02
IDS - Information Disclosure Statement - Reference in Previous Application LD-459.pdf	2CDF5B4E4B170E8E36B38930A67A6E548E55D75C1B060AB1BB1CA4AFFBD613E76BE12FB40F49D25EB0E88D9F34009DBD3373E7CAE869FF6524470CB8BE9643BE

This Acknowledgement Receipt evidences receipt on the noted date by the USPTO of the indicated documents, characterized by the applicant, and including page counts, where applicable. It serves as evidence of receipt similar to a Post Card, as described in MPEP 503.

New Applications Under 35 U.S.C. 111

If a new application is being filed and the application includes the necessary components for filing date (see 37 CFR 1.53(b)-(d) and MPEP 506), a Filing Receipt (37 CFR 1.54) will be issued in due course and the date shown on this Acknowledgement Receipt will establish the filing date of the application

National Stage of an International Application under 35 U.S.C. 371

If a timely submission to enter the national stage of an international application is compliant with the conditions of 35 U.S.C. 371 and other applicable requirements a Form PCT/DO/EO/903 indicating acceptance of the application as a national stage submission under 35 U.S.C. 371 will be issued in addition to the Filing Receipt, in due course.

New International Application Filed with the USPTO as a Receiving Office

If a new international application is being filed and the international application includes the necessary components for an international filing date (see PCT Article 11 and MPEP 1810), a Notification of the International Application Number and of the International Filing Date (Form PCT/RO/105) will be issued in due course, subject to prescriptions concerning national security, and the date shown on this Acknowledgement Receipt will establish the international filing date of the application.

INFORMATION DISCLOSURE STATEMENT BY APPLICANT (Not for submission under 37 CFR 1.99)		
	Application Number	18618609
	Filing Date	2024-03-27
	First Named Inventor	Jae Woong Kim
	Art Unit	N/A
	Examiner Name	Not Yet Assigned
	Attorney Docket Number	LGES 3.3F-1654 CON CON

CERTIFICATION STATEMENT

Please see 37 CFR 1.97 and 1.98 to make the appropriate selection(s):

☐ That each item of information contained in the information disclosure statement was first cited in any communication from a foreign patent office in a counterpart foreign application not more than three months prior to the filing of the information disclosure statement. See 37 CFR 1.97(e)(1).

OR

☐ That no item of information contained in the information disclosure statement was cited in a communication from a foreign patent office in a counterpart foreign application, and, to the knowledge of the person signing the certification after making reasonable inquiry, no item of information contained in the information disclosure statement was known to any individual designated in 37 CFR 1.56(c) more than three months prior to the filing of the information disclosure statement. See 37 CFR 1.97(e)(2).

☐ See attached certification statement.

☐ The fee set forth in 37 CFR 1.17 (p) has been submitted herewith.

☒ A certification statement is not submitted herewith.

SIGNATURE

A signature of the applicant or representative is required in accordance with CFR 1.33, 10.18. Please see CFR 1.4(d) for the form of the signature.

Signature	/Joseph H. Karlin/	Date (YYYY-MM-DD)	2024-04-15
Name/Print	Joseph H. Karlin	Registration Number	62,471

This collection of information is required by 37 CFR 1.97 and 1.98. The information is required to obtain or retain a benefit by the public which is to file (and by the USPTO to process) an application. Confidentiality is governed by 35 U.S.C. 122 and 37 CFR 1.14. This collection is estimated to take 1 hour to complete, including gathering, preparing and submitting the completed application form to the USPTO. Time will vary depending upon the individual case. Any comments on the amount of time you require to complete this form and/or suggestions for reducing this burden, should be sent to the Chief Information Officer, U.S. Patent and Trademark Office, U.S. Department of Commerce, P.O. Box 1450, Alexandria, VA 22313-1450. DO NOT SEND FEES OR COMPLETED FORMS TO THIS ADDRESS. **SEND TO: Commissioner for Patents, P.O. Box 1450, Alexandria, VA 22313-1450.**

Privacy Act Statement

The Privacy Act of 1974 (P.L. 93-579) requires that you be given certain information in connection with your submission of the attached form related to a patent application or patent. Accordingly, pursuant to the requirements of the Act, please be advised that: (1) the general authority for the collection of this information is 35 U.S.C. 2(b)(2); (2) furnishing of the information solicited is voluntary; and (3) the principal purpose for which the information is used by the U.S. Patent and Trademark Office is to process and/or examine your submission related to a patent application or patent. If you do not furnish the requested information, the U.S. Patent and Trademark Office may not be able to process and/or examine your submission, which may result in termination of proceedings or abandonment of the application or expiration of the patent.

The information provided by you in this form will be subject to the following routine uses:

1. The information on this form will be treated confidentially to the extent allowed under the Freedom of Information Act (5 U.S.C. 552) and the Privacy Act (5 U.S.C. 552a). Records from this system of records may be disclosed to the Department of Justice to determine whether the Freedom of Information Act requires disclosure of these record s.

2. A record from this system of records may be disclosed, as a routine use, in the course of presenting evidence to a court, magistrate, or administrative tribunal, including disclosures to opposing counsel in the course of settlement negotiations.

3. A record in this system of records may be disclosed, as a routine use, to a Member of Congress submitting a request involving an individual, to whom the record pertains, when the individual has requested assistance from the Member with respect to the subject matter of the record.

4. A record in this system of records may be disclosed, as a routine use, to a contractor of the Agency having need for the information in order to perform a contract. Recipients of information shall be required to comply with the requirements of the Privacy Act of 1974, as amended, pursuant to 5 U.S.C. 552a(m).

5. A record related to an International Application filed under the Patent Cooperation Treaty in this system of records may be disclosed, as a routine use, to the International Bureau of the World Intellectual Property Organization, pursuant to the Patent Cooperation Treaty.

6. A record in this system of records may be disclosed, as a routine use, to another federal agency for purposes of National Security review (35 U.S.C. 181) and for review pursuant to the Atomic Energy Act (42 U.S.C. 218(c)).

7. A record from this system of records may be disclosed, as a routine use, to the Administrator, General Services, or his/her designee, during an inspection of records conducted by GSA as part of that agency's responsibility to recommend improvements in records management practices and programs, under authority of 44 U.S.C. 2904 and 2906. Such disclosure shall be made in accordance with the GSA regulations governing inspection of records for this purpose, and any other relevant (i.e., GSA or Commerce) directive. Such disclosure shall not be used to make determinations about individuals.

8. A record from this system of records may be disclosed, as a routine use, to the public after either publication of the application pursuant to 35 U.S.C. 122(b) or issuance of a patent pursuant to 35 U.S.C. 151. Further, a record may be disclosed, subject to the limitations of 37 CFR 1.14, as a routine use, to the public if the record was filed in an application which became abandoned or in which the proceedings were terminated and which application is referenced by either a published application, an application open to public inspections or an issued patent.

9. A record from this system of records may be disclosed, as a routine use, to a Federal, State, or local law enforcement agency, if the USPTO becomes aware of a violation or potential violation of law or regulation.

Doc code: IDS
Doc description: Information Disclosure Statement (IDS) Filed

PTO/SB/08a (01-22)
Approved for use through 05/31/2024. OMB 0651-0031
U.S. Patent and Trademark Office; U.S. DEPARTMENT OF COMMERCE
Under the Paperwork Reduction Act of 1995, no persons are required to respond to a collection of information unless it contains a valid OMB control number.

INFORMATION DISCLOSURE STATEMENT BY APPLICANT (Not for submission under 37 CFR 1.99)		
	Application Number	18618609
	Filing Date	2024-03-27
	First Named Inventor	Jae Woong Kim
	Art Unit	N/A
	Examiner Name	Not Yet Assigned
	Attorney Docket Number	LGES 3.3F-1654 CON CON

U.S.PATENTS Remove

Examiner Initial*	Cite No	Patent Number	Kind Code[1]	Issue Date	Name of Patentee or Applicant of cited Document	Pages,Columns,Lines where Relevant Passages or Relevant Figures Appear
	1	3761314		1973-09-25	CAILLEY J	
	2	4822377		1989-04-18	Wolff	
	3	6569565		2003-05-27	Ligeois et al.	
	4	11652232		2023-05-16	Kim et al.	

If you wish to add additional U.S. Patent citation information please click the Add button. Add

U.S.PATENT APPLICATION PUBLICATIONS Remove

Examiner Initial*	Cite No	Publication Number	Kind Code[1]	Publication Date	Name of Patentee or Applicant of cited Document	Pages,Columns,Lines where Relevant Passages or Relevant Figures Appear
	1	20010023038	A1	2001-09-20	Ligeois et al.	
	2	20050003264	A1	2005-01-06	Oh et al.	

INFORMATION DISCLOSURE STATEMENT BY APPLICANT (Not for submission under 37 CFR 1.99)		
	Application Number	18618609
	Filing Date	2024-03-27
	First Named Inventor	Jae Woong Kim
	Art Unit	N/A
	Examiner Name	Not Yet Assigned
	Attorney Docket Number	LGES 3.3F-1654 CON CON

	3	20050287428	A1	2005-12-29	Cheon et al.	
	4	20050287428	A1	2005-12-29	Cheon et al.	
	5	20050287432	A1	2005-12-29	Cheon et al.	
	6	20060024572	A1	2006-02-02	Lee, Sang-Won	
	7	20060127774	A1	2006-06-15	Kim et al.	
	8	20070196730	A1	2007-08-23	Kozuki	
	9	20100081052	A1	2010-04-01	MORISHIMA et al.	
	10	20100190056	A	2010-07-29	Turner	
	11	20100310926	A1	2010-12-09	WANG et al.	
	12	20110067227	A1	2011-03-24	Sohn	
	13	20110293977	A1	2011-12-01	Kim et al.	

INFORMATION DISCLOSURE STATEMENT BY APPLICANT (Not for submission under 37 CFR 1.99)		
	Application Number	18618609
	Filing Date	2024-03-27
	First Named Inventor	Jae Woong Kim
	Art Unit	N/A
	Examiner Name	Not Yet Assigned
	Attorney Docket Number	LGES 3.3F-1654 CON CON

	14	20120009450	A1	2012-01-12	Chun	
	15	20120208055	A1	2012-08-16	Ahn	
	16	20130108903	A1	2013-05-02	Martin et al.	
	17	20130252054	A1	2013-09-26	BARONE et al.	
	18	20130344364	A1	2013-12-26	Nanaumi et al.	
	19	20140050956	A1	2014-02-20	HUANG	
	20	20150295270	A1	2015-10-15	Chun	
	21	20160351966	A1	2016-12-01	Batson et al.	
	22	20180145304	A1	2018-05-24	KOGETSU et al.	
	23	20190379028	A1	2019-12-12	Lim et al.	

If you wish to add additional U.S. Published Application citation information please click the Add button. Add

FOREIGN PATENT DOCUMENTS Remove

INFORMATION DISCLOSURE STATEMENT BY APPLICANT (Not for submission under 37 CFR 1.99)	Application Number	18618609
	Filing Date	2024-03-27
	First Named Inventor	Jae Woong Kim
	Art Unit	N/A
	Examiner Name	Not Yet Assigned
	Attorney Docket Number	LGES 3.3F-1654 CON CON

Examiner Initial*	Cite No	Foreign Document Number[3]	Country Code[2] ¡	Kind Code[4]	Publication Date	Name of Patentee or Applicant of cited Document	Pages,Columns,Lines where Relevant Passages or Relevant Figures Appear	T[5]
	1	102024936	CN	A	2011-04-20	Samsung Sdi Co., Ltd	U.S. Publication No. 20110067227 is an English language counterpart, which has been previously cited.	☒
	2	201450072	CN	U	2010-05-05	Dongguan Amperex Electronics Technology Co., Ltd	U.S. Publication No. 20100310926 is an English language counterpart, which has been previously cited.	☒
	3	203250828	CN	U	2013-10-23	A123 Systems, Inc	U.S. Publication No. 20130108903 is is an English language counterpart, which has been previously cited.	☒
	4	204577523	CN	U	2015-08-19	Contemporary Amperex Technology Ltd	Machine generated translation attached.	☒
	5	1134820	EP	A1	2001-09-19	Cit Alcatel	U.S. Publication No. 20010023038 A1 and U.S. Patent No. 6,569,565 are English language counterparts.	☒
	6	2003338276	JP	A	2003-11-28	Matsushita Electric Ind Co Ltd	Machine generated translation attached.	☒
	7	2005276459	JP	A	2005-10-06	Sanyo Electric Co	English translation of Abstract only.	☒
	8	2006128106	JP	A	2006-05-18	Samsung Sdi Co Ltd	U.S. Publication No. 20060127774 is an English language counterpart.	☒
	9	2007227137	JP	A	2007-09-06	Matsushita Electric Ind Co Ltd	U.S Publication No. 2007196730 is an English Language counterpart.	☒
	10	2008066040	JP	A	2008-03-21	Sony Corp	Machine generated translation attached.	☒

INFORMATION DISCLOSURE STATEMENT BY APPLICANT (Not for submission under 37 CFR 1.99)		
	Application Number	18618609
	Filing Date	2024-03-27
	First Named Inventor	Jae Woong Kim
	Art Unit	N/A
	Examiner Name	Not Yet Assigned
	Attorney Docket Number	LGES 3.3F-1654 CON CON

	11	2011065981	JP	A	2011-03-31	Samsung Sdi Co Ltd	U.S Publication No. 2011067227 is an English language counterpart.	☒
	12	2016001575	JP	A	2016-01-07	Denso Corp	Machine generated translation is attached.	☒
	13	2020509534	JP	A	2020-03-26	LG CHEM Ltd.	U.S Publication No. 2019379028 is an English Language counterpart.	☒
	14	4401634	JP	B2	2010-01-20	Matsushita Electric Ind Co Ltd	Machine generated translation attached.	☒
	15	5790576	JP	B2	2015-10-07	Toyota Industries Corp	Machine generated translation is attached.	☒
	16	H0935701	JP	A	1997-02-07	Denso Corp	Machine generated translation attached.	☒
	17	H11339756	JP	A	1999-12-10	Toyota Central Res & Dev	Machine generated translation attached.	☒
	18	100515833	KR	B1	2005-09-21	Samsung Sdi Co., Ltd	U.S. Publication No. 20050003264 A1 is an English language counterpart.	☒
	19	100599710	KR	B1	2006-07-12	Samsung Sdi Co., Ltd	U.S. Publication No. 20060024572 A1 is an English language counterpart.	☒
	20	100599749	KR	B1	2006-07-12	Samsung Sdi Co., Ltd	U.S. Publication No. 20050287428 A1 is an English language counterpart.	☒
	21	20000051740	KR	A	2000-08-16	Samsung Sdi Co., Ltd	Machine generated translation is attached.	☒

INFORMATION DISCLOSURE STATEMENT BY APPLICANT (Not for submission under 37 CFR 1.99)		
	Application Number	18618609
	Filing Date	2024-03-27
	First Named Inventor	Jae Woong Kim
	Art Unit	N/A
	Examiner Name	Not Yet Assigned
	Attorney Docket Number	LGES 3.3F-1654 CON CON

	22	20050121904	KR	A	2005-12-28	Samsung Sdi Co., Ltd	U.S. Publication No. 20050287428 A1 is an English language counterpart.	☒
	23	20050121914	KR	A	2005-12-28	Samsung Sdi Co., Ltd	U.S. Publication No. 20050287432 A1 is an English language counterpart.	☒
	24	20060022358	KR	A	2006-03-10	Samsung Sdi Co., Ltd	Machine generated translation is attached.	☒
	25	20100071941	KR	A	2010-06-29	Lg Chemical Ltd	U.S. Publication No. 20110293977 A1 is an English language counterpart.	☒
	26	20120006389	KR	A	2012-01-18	Samsung Sdi Co., Ltd	U.S. Publication No. 20120009450 A1 is an English language counterpart.	☒
	27	20120092367	KR	A	2012-08-21	Samsung Sdi Co., Ltd	U.S. Publication No. 20120208055 A1 is an English language counterpart.	☒
	28	20130073329	KR	A	2013-07-03	Datechnology Co., Ltd	Machine generated translation is attached.	☒
	29	2015-0117135	KR	A	2015-10-19	Samsung Sdi Co Ltd	U.S. Publication No. 20150295270 A1 is an English language counterpart.	☒
	30	20160113612	KR	A	2016-09-30	A123 Systems LLC	U.S. Publication No. 20160351966 A1 is an English language counterpart.	☒
	31	20170006437	KR	A	2017-01-18	Lg Chemical Ltd	Machine generated translation is attached.	☒
	32	2012086690	WO	A1	2012-06-28	Hitachi Vehicle Energy, Ltd	US Publication No. 2013344364 is an English language counterpart.	☒

INFORMATION DISCLOSURE STATEMENT BY APPLICANT (Not for submission under 37 CFR 1.99)		
	Application Number	18618609
	Filing Date	2024-03-27
	First Named Inventor	Jae Woong Kim
	Art Unit	N/A
	Examiner Name	Not Yet Assigned
	Attorney Docket Number	LGES 3.3F-1654 CON CON

	33	2014188501	WO	A1	2014-11-27	Hitachi Automotive Systems, Ltd	Machine generated translation attached.	☒

If you wish to add additional Foreign Patent Document citation information please click the Add button Add

NON-PATENT LITERATURE DOCUMENTS Remove

Examiner Initials*	Cite No	Include name of the author (in CAPITAL LETTERS), title of the article (when appropriate), title of the item (book, magazine, journal, serial, symposium, catalog, etc), date, pages(s), volume-issue number(s), publisher, city and/or country where published.	T[5]
	1	International Search Report from Application No. PCT/KR2018/004366 mailed July 20, 2018, pages 1 - 2	☒
	2	Extended European Seach Report including Written Opinion for Application No. EP18784869.2 dated January 21, 2020, 5 pages.	☐
	3	Chiinese Search Report for Application No. 201880025247, dated August 24, 2021, 2 pages.	☐

If you wish to add additional non-patent literature document citation information please click the Add button Add

EXAMINER SIGNATURE

Examiner Signature		Date Considered	

*EXAMINER: Initial if reference considered, whether or not citation is in conformance with MPEP 609. Draw line through a citation if not in conformance and not considered. Include copy of this form with next communication to applicant.

[1] See Kind Codes of USPTO Patent Documents at www.USPTO.GOV or MPEP 901.04. [2] Enter office that issued the document, by the two-letter code (WIPO Standard ST.3). [3] For Japanese patent documents, the indication of the year of the reign of the Emperor must precede the serial number of the patent document. [4] Kind of document by the appropriate symbols as indicated on the document under WIPO Standard ST.16 if possible. [5] Applicant is to place a check mark here if English language translation is attached.

Other Prior Art

According to the information contained in form PTO-1449 or PTO-892, there are one or more other prior art/non-patent literature documents missing from the original file history record obtained from the United States Patent and Trademark Office. Upon your request we will attempt to obtain these documents from alternative resources. Please note that additional charges will apply for this service.

This page is not part of the official USPTO record. It has been determined that content identified on this document is missing from the original file history record.

I hereby certify that this paper (along with any paper referred to as being attached or enclosed) is being transmitted via the Office electronic filing system in accordance with 37 C.F.R. § 1.6(a)(4).

Dated: April 15, 2024
Electronic Signature for Joseph H. Karlin: /Joseph H. Karlin/

Docket No. LGES 3.3F-1654 CON CON
(PATENT)

IN THE UNITED STATES PATENT AND TRADEMARK OFFICE

In re Patent Application of:
Kim et al.

Application No.: 18/618,609

Confirmation No.: 3847

Filed: March 27, 2024

Art Unit: N/A

For: Secondary Battery And Method For Manufacturing The Same

Examiner: Not Yet Assigned

Commissioner for Patents
P.O. Box 1450
Alexandria, VA 22313-1450

INFORMATION DISCLOSURE STATEMENT

Dear Commissioner:

It is respectfully requested that the references listed on the enclosed form be made of record and considered with respect to the above-referenced U.S. patent application. A copy of each foreign patent document and each non-patent literature document was of record in Application Nos. 18/132,719 and 16/498,751, the benefit of which is claimed under § 120. Submission of the present Information Disclosure Statement should not be taken as an admission that the cited references are legally available prior art or that the same are pertinent or material or even analogous art to the claimed invention.

Applicant believes no fee is due with this response. However, if a fee is due, please charge our Deposit Account No. 12-1095, under Order No. LGES 3.3F-1654 CON CON from which the undersigned is authorized to draw.

Dated: April 15, 2024

Respectfully submitted,

Electronic signature: /Joseph H. Karlin/
Joseph H. Karlin
Registration No.: 62,471
LERNER DAVID LLP
20 Commerce Dr.
Cranford, New Jersey 07016
(908) 654-5000
Attorney for Applicant

LD-455A

8046275

UNITED STATES PATENT AND TRADEMARK OFFICE

UNITED STATES DEPARTMENT OF COMMERCE
United States Patent and Trademark Office
Address: COMMISSIONER FOR PATENTS
P.O. Box 1450
Alexandria, Virginia 22313-1450
www.uspto.gov

APPLICATION NUMBER	FILING OR 371(C) DATE	FIRST NAMED APPLICANT	ATTY. DOCKET NO./TITLE
18/618,609	03/27/2024	Jae Woong Kim	LGES 3.3F-1654 CON CON

CONFIRMATION NO. 3847

86765
LG
Lerner David LLP
20 Commerce Drive
Cranford, NJ 07016

PUBLICATION NOTICE

OC000000075442585

Date Mailed: 07/18/2024

Title: Secondary Battery And Method For Manufacturing The Same

Publication No.US-2024-0243335-A1
Publication Date:07/18/2024

NOTICE OF PUBLICATION OF APPLICATION

The above-identified application will be electronically published as a patent application publication pursuant to 37 CFR 1.211, et seq. The patent application publication number and publication date are set forth above.

The publication may be viewed using the USPTO's publicly available Searchable Databases via the Patent Public Search tool at www.uspto.gov. The direct link to access the Patent Public Search tool is currently https://ppubs.uspto.gov/pubwebapp/static/pages/ppubsbasic.html.

The publication process established by the Office does not provide for mailing a copy of the publication to applicant. A copy of the publication may be obtained from the Office upon payment of the appropriate fee set forth in 37 CFR 1.19(a)(1). Orders for copies of patent application publications are handled by the USPTO's Public Records Division. The Public Records Division can be reached by telephone at (571) 272-3150 or (800) 972-6382, by facsimile at (571) 273-3250, by mail addressed to the United States Patent and Trademark Office, Public Records Division, Alexandria, VA 22313-1450 or via the Internet.

In addition, information on the status of the application, including the mailing date of Office actions and the dates of receipt of correspondence filed in the Office, may also be accessed via the Internet through Patent Center, the USPTO's electronic patent application filing and management system. The direct link to access this status information is currently https://patentcenter.uspto.gov/. Prior to publication, such status information is confidential and may only be obtained by applicant using the private side of Patent Center.

Further assistance in electronically accessing the publication, or about Patent Center, is available by calling the Patent Electronic Business Center at 1-866-217-9197.

Office of Data Managment, Application Assistance Unit (571) 272-4000, or (571) 272-4200, or 1-888-786-0101

UNITED STATES
PATENT AND TRADEMARK OFFICE

P.O. Box 1450
Alexandria, VA 22313 - 1450
www.uspto.gov

ELECTRONIC ACKNOWLEDGEMENT RECEIPT

APPLICATION #	RECEIPT DATE / TIME	ATTORNEY DOCKET #
18/618,609	**10/03/2024 03:26:37 PM Z ET**	**LGES 3.3F-1654 CON CON**

Title of Invention

Secondary Battery And Method For Manufacturing The Same

Application Information

APPLICATION TYPE	Utility - Nonprovisional Application under 35 USC 111(a)	PATENT #	-
CONFIRMATION #	3847	FILED BY	Jessica Bianchi
PATENT CENTER #	67427773	FILING DATE	03/27/2024
CUSTOMER #	86765	FIRST NAMED INVENTOR	Jae Woong Kim
CORRESPONDENCE ADDRESS	-	AUTHORIZED BY	Wilfred Patrick

Documents

TOTAL DOCUMENTS: 2

DOCUMENT	PAGES	DESCRIPTION	SIZE (KB)
LGES5172 - Information Disclosure Statement Fillable PDF.pdf	4	Information Disclosure Statement (IDS) Form (SB08)	1313 KB
IDS - Information Disclosure Statement - Reference Enclosed LD-458.pdf	1	Transmittal Letter	23 KB

Digest

DOCUMENT	MESSAGE DIGEST(SHA-512)
LGES5172 - Information Disclosure Statement Fillable PDF.pdf	5424B0BFAAB95DECAE8BFF529A18F8FBF8A47A8D7752DB388961184242ED07D9C4BA3E6735A9754A62559FDE2C84116C126578EE22894DF421788B62A315A2B5

IDS - Information Disclosure Statement - Reference Enclosed LD-458.pdf	A777E2234F1C294039E2F3801D6F09442F677EF4C14AD595BD6CDCD3ECC49F9090AAFCA824CD22CB868E606CC8B02CCBDF81D96A7800E2FF185B523FAD45C640

This Acknowledgement Receipt evidences receipt on the noted date by the USPTO of the indicated documents, characterized by the applicant, and including page counts, where applicable. It serves as evidence of receipt similar to a Post Card, as described in MPEP 503.

New Applications Under 35 U.S.C. 111

If a new application is being filed and the application includes the necessary components for filing date (see 37 CFR 1.53(b)-(d) and MPEP 506), a Filing Receipt (37 CFR 1.54) will be issued in due course and the date shown on this Acknowledgement Receipt will establish the filing date of the application

National Stage of an International Application under 35 U.S.C. 371

If a timely submission to enter the national stage of an international application is compliant with the conditions of 35 U.S.C. 371 and other applicable requirements a Form PCT/DO/EO/903 indicating acceptance of the application as a national stage submission under 35 U.S.C. 371 will be issued in addition to the Filing Receipt, in due course.

New International Application Filed with the USPTO as a Receiving Office

If a new international application is being filed and the international application includes the necessary components for an international filing date (see PCT Article 11 and MPEP 1810), a Notification of the International Application Number and of the International Filing Date (Form PCT/RO/105) will be issued in due course, subject to prescriptions concerning national security, and the date shown on this Acknowledgement Receipt will establish the international filing date of the application.

INFORMATION DISCLOSURE STATEMENT BY APPLICANT (Not for submission under 37 CFR 1.99)		
	Application Number	18618609
	Filing Date	2024-03-27
	First Named Inventor	Jae Woong Kim
	Art Unit	RD00
	Examiner Name	A. E. Eggerding
	Attorney Docket Number	LGES 3.3F-1654 CON CON

CERTIFICATION STATEMENT

Please see 37 CFR 1.97(e) to make the appropriate selection(s):

☐ That each item of information contained in the information disclosure statement was first cited in any communication from a foreign patent office in a counterpart foreign application not more than three months prior to the filing of the information disclosure statement. See 37 CFR 1.97(e)(1).

OR

☐ That no item of information contained in the information disclosure statement was cited in a communication from a foreign patent office in a counterpart foreign application, and, to the knowledge of the person signing the certification after making reasonable inquiry, no item of information contained in the information disclosure statement was known to any individual designated in 37 CFR 1.56(c) more than three months prior to the filing of the information disclosure statement. See 37 CFR 1.97(e)(2).

☐ See attached certification statement.

☒ A certification statement is not submitted herewith.

FEE

☐ The fee set forth in 37 CFR 1.17 (p) has been submitted herewith.

COPIES

☐ An identification of an earlier application pursuant to 37 CFR 1.98 (d) (1) is attached.

SIGNATURE

A signature of the applicant or representative is required in accordance with CFR 1.33, 10.18. Please see CFR 1.4(d) for the form of the signature.

Signature	/Joseph H. Karlin/	Date (YYYY-MM-DD)	2024-10-03
Name/Print	Joseph H. Karlin	Registration Number	62,471

This collection of information is required by 37 CFR 1.97 and 1.98. The information is required to obtain or retain a benefit by the public which is to file (and by the USPTO to process) an application. Confidentiality is governed by 35 U.S.C. 122 and 37 CFR 1.14. This collection is estimated to take 1 hour to complete, including gathering, preparing and submitting the completed application form to the USPTO. Time will vary depending upon the individual case. Any comments on the amount of time you require to complete this form and/or suggestions for reducing this burden, should be sent to the Chief Information Officer, U.S. Patent and Trademark Office, U.S. Department of Commerce, P.O. Box 1450, Alexandria, VA 22313-1450. DO NOT SEND FEES OR COMPLETED FORMS TO THIS ADDRESS. **SEND TO: Commissioner for Patents, P.O. Box 1450, Alexandria, VA 22313-1450.**

Privacy Act Statement

The Privacy Act of 1974 (P.L. 93-579) requires that you be given certain information in connection with your submission of the attached form related to a patent application or patent. Accordingly, pursuant to the requirements of the Act, please be advised that: (1) the general authority for the collection of this information is 35 U.S.C. 2(b)(2); (2) furnishing of the information solicited is voluntary; and (3) the principal purpose for which the information is used by the U.S. Patent and Trademark Office is to process and/or examine your submission related to a patent application or patent. If you do not furnish the requested information, the U.S. Patent and Trademark Office may not be able to process and/or examine your submission, which may result in termination of proceedings or abandonment of the application or expiration of the patent.

The information provided by you in this form will be subject to the following routine uses:

1. The information on this form will be treated confidentially to the extent allowed under the Freedom of Information Act (5 U.S.C. 552) and the Privacy Act (5 U.S.C. 552a). Records from this system of records may be disclosed to the Department of Justice to determine whether the Freedom of Information Act requires disclosure of these record s.

2. A record from this system of records may be disclosed, as a routine use, in the course of presenting evidence to a court, magistrate, or administrative tribunal, including disclosures to opposing counsel in the course of settlement negotiations.

3. A record in this system of records may be disclosed, as a routine use, to a Member of Congress submitting a request involving an individual, to whom the record pertains, when the individual has requested assistance from the Member with respect to the subject matter of the record.

4. A record in this system of records may be disclosed, as a routine use, to a contractor of the Agency having need for the information in order to perform a contract. Recipients of information shall be required to comply with the requirements of the Privacy Act of 1974, as amended, pursuant to 5 U.S.C. 552a(m).

5. A record related to an International Application filed under the Patent Cooperation Treaty in this system of records may be disclosed, as a routine use, to the International Bureau of the World Intellectual Property Organization, pursuant to the Patent Cooperation Treaty.

6. A record in this system of records may be disclosed, as a routine use, to another federal agency for purposes of National Security review (35 U.S.C. 181) and for review pursuant to the Atomic Energy Act (42 U.S.C. 218(c)).

7. A record from this system of records may be disclosed, as a routine use, to the Administrator, General Services, or his/her designee, during an inspection of records conducted by GSA as part of that agency's responsibility to recommend improvements in records management practices and programs, under authority of 44 U.S.C. 2904 and 2906. Such disclosure shall be made in accordance with the GSA regulations governing inspection of records for this purpose, and any other relevant (i.e., GSA or Commerce) directive. Such disclosure shall not be used to make determinations about individuals.

8. A record from this system of records may be disclosed, as a routine use, to the public after either publication of the application pursuant to 35 U.S.C. 122(b) or issuance of a patent pursuant to 35 U.S.C. 151. Further, a record may be disclosed, subject to the limitations of 37 CFR 1.14, as a routine use, to the public if the record was filed in an application which became abandoned or in which the proceedings were terminated and which application is referenced by either a published application, an application open to public inspections or an issued patent.

9. A record from this system of records may be disclosed, as a routine use, to a Federal, State, or local law enforcement agency, if the USPTO becomes aware of a violation or potential violation of law or regulation.

Doc code: IDS
Doc description: Information Disclosure Statement (IDS) Filed

PTO/SB/08a (01-22)
Approved for use through 05/31/2024. OMB 0651-0031
U.S. Patent and Trademark Office; U.S. DEPARTMENT OF COMMERCE
Under the Paperwork Reduction Act of 1995, no persons are required to respond to a collection of information unless it contains a valid OMB control number.

INFORMATION DISCLOSURE STATEMENT BY APPLICANT (**Not for submission under 37 CFR 1.99)**	Application Number	18618609
	Filing Date	2024-03-27
	First Named Inventor	Jae Woong Kim
	Art Unit	RD00
	Examiner Name	A. E. Eggerding
	Attorney Docket Number	LGES 3.3F-1654 CON CON

U.S.PATENTS Remove

Examiner Initial*	Cite No	Patent Number	Kind Code[1]	Issue Date	Name of Patentee or Applicant of cited Document	Pages,Columns,Lines where Relevant Passages or Relevant Figures Appear
	1	11973177		2024-04-30	Kim et al.	

If you wish to add additional U.S. Patent citation information please click the Add button. Add

U.S.PATENT APPLICATION PUBLICATIONS Remove

Examiner Initial*	Cite No	Publication Number	Kind Code[1]	Publication Date	Name of Patentee or Applicant of cited Document	Pages,Columns,Lines where Relevant Passages or Relevant Figures Appear
	1					

If you wish to add additional U.S. Published Application citation information please click the Add button. Add

FOREIGN PATENT DOCUMENTS Remove

Examiner Initial*	Cite No	Foreign Document Number[3]	Country Code[2] ¡	Kind Code[4]	Publication Date	Name of Patentee or Applicant of cited Document	Pages,Columns,Lines where Relevant Passages or Relevant Figures Appear	T[5]
	1							☐

If you wish to add additional Foreign Patent Document citation information please click the Add button Add

NON-PATENT LITERATURE DOCUMENTS Remove

Examiner Initials*	Cite No	Include name of the author (in CAPITAL LETTERS), title of the article (when appropriate), title of the item (book, magazine, journal, serial, symposium, catalog, etc), date, pages(s), volume-issue number(s), publisher, city and/or country where published.	T[5]

INFORMATION DISCLOSURE STATEMENT BY APPLICANT (Not for submission under 37 CFR 1.99)		
	Application Number	18618609
	Filing Date	2024-03-27
	First Named Inventor	Jae Woong Kim
	Art Unit	RD00
	Examiner Name	A. E. Eggerding
	Attorney Docket Number	LGES 3.3F-1654 CON CON

	1		☐

If you wish to add additional non-patent literature document citation information please click the Add button Add

EXAMINER SIGNATURE

Examiner Signature		Date Considered	

*EXAMINER: Initial if reference considered, whether or not citation is in conformance with MPEP 609. Draw line through a citation if not in conformance and not considered. Include copy of this form with next communication to applicant.

[1] See Kind Codes of USPTO Patent Documents at www.USPTO.GOV or MPEP 901.04. [2] Enter office that issued the document, by the two-letter code (WIPO Standard ST.3). [3] For Japanese patent documents, the indication of the year of the reign of the Emperor must precede the serial number of the patent document. [4] Kind of document by the appropriate symbols as indicated on the document under WIPO Standard ST.16 if possible. [5] Applicant is to place a check mark here if English language translation is attached.

I hereby certify that this paper (along with any paper referred to as being attached or enclosed) is being transmitted via the Office electronic filing system in accordance with 37 C.F.R. § 1.6(a)(4).

Dated: October 3, 2024
Electronic Signature for Joseph H. Karlin: /Joseph H. Karlin/

Docket No. LGES 3.3F-1654 CON CON
(PATENT)

IN THE UNITED STATES PATENT AND TRADEMARK OFFICE

In re Patent Application of:
Kim et al.

Application No.: 18/618,609

Confirmation No.: 3847

Filed: March 27, 2024

Art Unit: RD00

For: Secondary Battery And Method For Manufacturing The Same

Examiner: A. E. Eggerding

Commissioner for Patents
P.O. Box 1450
Alexandria, VA 22313-1450

INFORMATION DISCLOSURE STATEMENT

Dear Commissioner:

It is respectfully requested that the reference(s) listed on the enclosed form be made of record and considered with respect to the above-referenced U.S. patent application. A copy of each reference which is not a U.S. patent or patent application is enclosed. Submission of the present Information Disclosure Statement should not be taken as an admission that the cited reference(s) is/are legally available prior art or that the same is/are pertinent or material or even analogous art to the claimed invention.

Applicant believes no fee is due with this response. However, if a fee is due, please charge our Deposit Account No. 12-1095, under Order No. LGES 3.3F-1654 CON CON from which the undersigned is authorized to draw.

Dated: October 3, 2024

Respectfully submitted,

Electronic signature: /Joseph H. Karlin/
Joseph H. Karlin
Registration No.: 62,471
LERNER DAVID LLP
20 Commerce Dr.
Cranford, New Jersey 07016
(908) 654-5000
Attorney for Applicant(s)

LD-458\

8244073

UNITED STATES PATENT AND TRADEMARK OFFICE

UNITED STATES DEPARTMENT OF COMMERCE
United States Patent and Trademark Office
Address: COMMISSIONER FOR PATENTS
P.O. Box 1450
Alexandria, Virginia 22313-1450
www.uspto.gov

APPLICATION NO.	FILING DATE	FIRST NAMED INVENTOR	ATTORNEY DOCKET NO.	CONFIRMATION NO.
18/618,609	03/27/2024	Jae Woong Kim	LGES 3.3F-1654 CON CON	3847

86765 7590 10/16/2024
LG
Lerner David LLP
20 Commerce Drive
Cranford, NJ 07016

EXAMINER
EGGERDING, ALIX ECHELMEYER

ART UNIT	PAPER NUMBER
RD00	

NOTIFICATION DATE	DELIVERY MODE
10/16/2024	ELECTRONIC

Please find below and/or attached an Office communication concerning this application or proceeding.

The time period for reply, if any, is set in the attached communication.

Notice of the Office communication was sent electronically on above-indicated "Notification Date" to the following e-mail address(es):

eOfficeAction@lernerdavid.com

Office Action Summary	Application No. 18/618,609	Applicant(s) Kim et al.	
	Examiner ALIX E EGGERDING	Art Unit RD00	AIA (FITF) Status Yes

-- The MAILING DATE of this communication appears on the cover sheet with the correspondence address --

Period for Reply

A SHORTENED STATUTORY PERIOD FOR REPLY IS SET TO EXPIRE 3 MONTHS FROM THE MAILING DATE OF THIS COMMUNICATION.

- Extensions of time may be available under the provisions of 37 CFR 1.136(a). In no event, however, may a reply be timely filed after SIX (6) MONTHS from the mailing date of this communication.
- If NO period for reply is specified above, the maximum statutory period will apply and will expire SIX (6) MONTHS from the mailing date of this communication.
- Failure to reply within the set or extended period for reply will, by statute, cause the application to become ABANDONED (35 U.S.C. § 133). Any reply received by the Office later than three months after the mailing date of this communication, even if timely filed, may reduce any earned patent term adjustment. See 37 CFR 1.704(b).

Status

1)☑ Responsive to communication(s) filed on 3/27/24.

☐ A declaration(s)/affidavit(s) under **37 CFR 1.130(b)** was/were filed on _____.

2a)☐ This action is **FINAL.** 2b) ☑ This action is non-final.

3)☐ An election was made by the applicant in response to a restriction requirement set forth during the interview on _____; the restriction requirement and election have been incorporated into this action.

4)☐ Since this application is in condition for allowance except for formal matters, prosecution as to the merits is closed in accordance with the practice under *Ex parte Quayle*, 1935 C.D. 11, 453 O.G. 213.

Disposition of Claims*

5) ☑ Claim(s) 1-14 is/are pending in the application.

5a) Of the above claim(s) _____ is/are withdrawn from consideration.

6) ☐ Claim(s) _____ is/are allowed.

7) ☑ Claim(s) 1-14 is/are rejected.

8) ☐ Claim(s) _____ is/are objected to.

9) ☐ Claim(s) _____ are subject to restriction and/or election requirement

* If any claims have been determined allowable, you may be eligible to benefit from the **Patent Prosecution Highway** program at a participating intellectual property office for the corresponding application. For more information, please see http://www.uspto.gov/patents/init_events/pph/index.jsp or send an inquiry to **PPHfeedback@uspto.gov.**

Application Papers

10)☐ The specification is objected to by the Examiner.

11)☐ The drawing(s) filed on _____ is/are: a)☐ accepted or b)☐ objected to by the Examiner.

Applicant may not request that any objection to the drawing(s) be held in abeyance. See 37 CFR 1.85(a).

Replacement drawing sheet(s) including the correction is required if the drawing(s) is objected to. See 37 CFR 1.121(d).

Priority under 35 U.S.C. § 119

12)☐ Acknowledgment is made of a claim for foreign priority under 35 U.S.C. § 119(a)-(d) or (f).

Certified copies:

a)☐ All b)☐ Some** c)☐ None of the:

1.☐ Certified copies of the priority documents have been received.

2.☐ Certified copies of the priority documents have been received in Application No. _____.

3.☐ Copies of the certified copies of the priority documents have been received in this National Stage application from the International Bureau (PCT Rule 17.2(a)).

** See the attached detailed Office action for a list of the certified copies not received.

Attachment(s)

1) ☑ Notice of References Cited (PTO-892)

2) ☑ Information Disclosure Statement(s) (PTO/SB/08a and/or PTO/SB/08b) Paper No(s)/Mail Date 4/15/24,10/3/24.

3) ☐ Interview Summary (PTO-413) Paper No(s)/Mail Date _____.

4) ☐ Other: _____.

DETAILED ACTION

Notice of Pre-AIA or AIA Status

1. The present application, filed on or after March 16, 2013, is being examined under the first inventor to file provisions of the AIA.

Information Disclosure Statement

2. The information disclosure statements filed 4/15/24 and 10/3/24 have been considered.

Double Patenting

3. The nonstatutory double patenting rejection is based on a judicially created doctrine grounded in public policy (a policy reflected in the statute) so as to prevent the unjustified or improper timewise extension of the "right to exclude" granted by a patent and to prevent possible harassment by multiple assignees. A nonstatutory double patenting rejection is appropriate where the conflicting claims are not identical, but at least one examined application claim is not patentably distinct from the reference claim(s) because the examined application claim is either anticipated by, or would have been obvious over, the reference claim(s). See, e.g., *In re Berg*, 140 F.3d 1428, 46 USPQ2d 1226 (Fed. Cir. 1998); *In re Goodman*, 11 F.3d 1046, 29 USPQ2d 2010 (Fed. Cir. 1993); *In re Longi*, 759 F.2d 887, 225 USPQ 645 (Fed. Cir. 1985); *In re Van Ornum*, 686 F.2d 937, 214 USPQ 761 (CCPA 1982); *In re Vogel*, 422 F.2d 438, 164 USPQ 619 (CCPA 1970); *In re Thorington*, 418 F.2d 528, 163 USPQ 644 (CCPA 1969).

A timely filed terminal disclaimer in compliance with 37 CFR 1.321(c) or 1.321(d) may be used to overcome an actual or provisional rejection based on nonstatutory double patenting provided the reference application or patent either is shown to be commonly owned with the examined application, or claims an invention made as a result of activities undertaken within the scope of a joint research agreement. See MPEP § 717.02 for applications subject to examination under the first inventor to file

provisions of the AIA as explained in MPEP § 2159. See MPEP § 2146 *et seq.* for applications not subject to examination under the first inventor to file provisions of the AIA. A terminal disclaimer must be signed in compliance with 37 CFR 1.321(b).

The filing of a terminal disclaimer by itself is not a complete reply to a nonstatutory double patenting (NSDP) rejection. A complete reply requires that the terminal disclaimer be accompanied by a reply requesting reconsideration of the prior Office action. Even where the NSDP rejection is provisional the reply must be complete. See MPEP § 804, subsection I.B.1. For a reply to a non-final Office action, see 37 CFR 1.111(a). For a reply to final Office action, see 37 CFR 1.113(c). A request for reconsideration while not provided for in 37 CFR 1.113(c) may be filed after final for consideration. See MPEP §§ 706.07(e) and 714.13.

The USPTO Internet website contains terminal disclaimer forms which may be used. Please visit www.uspto.gov/patent/patents-forms. The actual filing date of the application in which the form is filed determines what form (e.g., PTO/SB/25, PTO/SB/26, PTO/AIA/25, or PTO/AIA/26) should be used. A web-based eTerminal Disclaimer may be filled out completely online using web-screens. An eTerminal Disclaimer that meets all requirements is auto-processed and approved immediately upon submission. For more information about eTerminal Disclaimers, refer to www.uspto.gov/patents/apply/applying-online/eterminal-disclaimer.

4. Claims 1-14 are rejected on the ground of nonstatutory double patenting as being unpatentable over claims 1-11 of U.S. Patent No. 11,973,177. Although the claims at issue are not identical, they are not patentably distinct from each other.

Regarding claim 1, the limitations are mapped to claim 1 of ‘177, below:

11/973,117	instant claims
The invention claimed is: 1. A secondary battery comprising: a can member; and an electrode assembly having a positive electrode, a negative electrode and a separator disposed therebetween, which are wounded together in a jelly-roll shape, wherein the positive electrode or the negative electrode comprises: an electrode collector; a coating portion coated with an active material on the electrode collector; and a non-coating portion on which the active material is not applied to the electrode collector, the non-coating portion being adjacent to the coating portion in a longitudinal direction of the electrode collector; and a notching tab part formed in the non-coating portion and extending from the coating portion in a width direction of the electrode collector perpendicular to the longitudinal direction, the notching tab part being wound to form two or more overlapping layers, wherein the notching tab part comprises a plurality of notching tabs each formed from a respective portion of the two or more overlapping layers, the plurality of notching tabs are circumferentially distributed about a central axis of the electrode assembly, the plurality of notching tabs each having two or more layers are in a bent state to form an overlapping region therebetween in the width direction of the electrode collector, and the plurality of notching tabs are bonded at the overlapping region and electrically connected to the can member.	1. A secondary battery comprising: a can member; and an electrode assembly having a positive electrode, a negative electrode and a separator disposed therebetween, which are wounded together in a wound state in a jelly-roll shape, wherein the positive electrode or the negative electrode comprises: an electrode collector; a coating portion coated with an active material on the electrode collector; and a non-coating portion on which the active material is not applied to the electrode collector, the non-coating portion being adjacent to the coating portion in a width direction perpendicular to a longitudinal direction of the electrode collector, the non-coating portion having a plurality of notching tabs formed therein such that each of the plurality of notching tabs extends away from the coating portion in the width direction, wherein, when the electrode assembly is in the wound state, the plurality of notching tabs are circumferentially distributed about a central axis of the electrode assembly, wherein the plurality of notching tabs are bent in a radial direction toward the central axis so as to form an overlapping region in which the plurality of notching tabs overlap one another in the width direction of the electrode collector, and wherein at least some of the plurality of notching tabs are directly bonded to others of the plurality of notching tabs at the overlapping region so as to define an electrical connection between the plurality of notching tabs and the can member.

While the claims are not identical, the limitations of ‘117 clearly map to the limitations of instant claim 1 in such a manner that the limitations of instant claim 1 would have been obvious to the skilled artisan. The examiner notes that the limitation of instant claim 1 to the plurality of notching tabs being bent in a radial direction toward the central axis is not specifically found in claim 1 of ‘117 but is an inherent feature of the structure of claim 1 of ‘117 due to the notching tabs of ‘117 being circumferentially distributed about a central axis since the skilled artisan will easily understand that the circumference of the wound assembly of ‘117 forms radial directions originating from the central axis.

Claims 2 and 4-11 of the instant invention are rejected over claims 2 and 4-11 over '117, respectively.

Instant claim 3 is not identical to claim 3 of '117, but the examiner maintains that the limitations are inherent as understood by the skilled artisan for the reasons discussed above concerning the circumferentially distributed limitation of claim 1 of '117.

Instant claim 12 is rejected over the limitations of claim 1 of '117 concerning the notching tab parts being wound to form two or more overlapping layers (see column 10 lines 2-3) and being circumferentially distributed (column 10 lines 7-8).

As for instant claims 13 and 14, while the claims of '117 are silent on the exact number of notching tabs, it would have been obvious to the skilled artisan at the time of the invention to determine a workable amount of notching tabs by duplicating the number of tabs of claim 1 of '117, for example in order to ensure proper connection of the wound assembly to the can member. It has been held that mere duplication of the essential working parts of an invention involves only routine skill in the art. MPEP 2144.04 VI B

Conclusion

5. Any inquiry concerning this communication or earlier communications from the examiner should be directed to ALIX ECHELMEYER EGGERDING whose telephone number is (571)272-1101. The examiner can normally be reached 8:30am - 4:30pm.

Examiner interviews are available via telephone, in-person, and video conferencing using a USPTO supplied web-based collaboration tool. To schedule an interview, applicant is encouraged to use the USPTO Automated Interview Request (AIR) at http://www.uspto.gov/interviewpractice.

If attempts to reach the examiner by telephone are unsuccessful, the examiner's supervisor, Ula Ruddock can be reached on 571-272-1481. The fax phone number for the organization where this application or proceeding is assigned is 571-273-8300.

Information regarding the status of published or unpublished applications may be obtained from Patent Center. Unpublished application information in Patent Center is available to registered users. To file and manage patent submissions in Patent Center, visit: https://patentcenter.uspto.gov. Visit https://www.uspto.gov/patents/apply/patent-center for more information about Patent Center and https://www.uspto.gov/patents/docx for information about filing in DOCX format. For additional questions, contact the Electronic Business Center (EBC) at 866-217-9197 (toll-free). If you would like assistance from a USPTO Customer Service Representative, call 800-786-9199 (IN USA OR CANADA) or 571-272-1000.

/ALIX E EGGERDING/
Primary Examiner, RD00

Notice of References Cited	Application/Control No. 18/618,609	Applicant(s)/Patent Under Reexamination Kim et al.	
	Examiner ALIX E EGGERDING	Art Unit RD00	Page 1 of 1

U.S. PATENT DOCUMENTS

*		Document Number Country Code-Number-Kind Code	Date YYYY-MM-DD	Name	CPC Classification	US Classification
*	A	US-11973177-B2	2024-04-30	Kim; Jae Woong	H01M10/0422	1/1
	B					
	C					
	D					
	E					
	F					
	G					
	H					
	I					
	J					
	K					
	L					
	M					

FOREIGN PATENT DOCUMENTS

*		Document Number Country Code-Number-Kind Code	Date YYYY-MM-DD	Country	Name	CPC Classification
	N					
	O					
	P					
	Q					
	R					
	S					
	T					

NON-PATENT DOCUMENTS

*		Include as applicable: Author, Title Date, Publisher, Edition or Volume, Pertinent Pages)
	U	
	V	
	W	
	X	

*A copy of this reference is not being furnished with this Office action. (See MPEP § 707.05(a).)
Dates in YYYY-MM-DD format are publication dates. Classifications may be US or foreign.

INFORMATION DISCLOSURE STATEMENT BY APPLICANT (Not for submission under 37 CFR 1.99)		
	Application Number	18618609
	Filing Date	2024-03-27
	First Named Inventor	Jae Woong Kim
	Art Unit	N/A
	Examiner Name	Not Yet Assigned
	Attorney Docket Number	LGES 3.3F-1654 CON CON

CERTIFICATION STATEMENT

Please see 37 CFR 1.97 and 1.98 to make the appropriate selection(s):

☐ That each item of information contained in the information disclosure statement was first cited in any communication from a foreign patent office in a counterpart foreign application not more than three months prior to the filing of the information disclosure statement. See 37 CFR 1.97(e)(1).

OR

☐ That no item of information contained in the information disclosure statement was cited in a communication from a foreign patent office in a counterpart foreign application, and, to the knowledge of the person signing the certification after making reasonable inquiry, no item of information contained in the information disclosure statement was known to any individual designated in 37 CFR 1.56(c) more than three months prior to the filing of the information disclosure statement. See 37 CFR 1.97(e)(2).

☐ See attached certification statement.

☐ The fee set forth in 37 CFR 1.17 (p) has been submitted herewith.

☒ A certification statement is not submitted herewith.

SIGNATURE

A signature of the applicant or representative is required in accordance with CFR 1.33, 10.18. Please see CFR 1.4(d) for the form of the signature.

Signature	/Joseph H. Karlin/	Date (YYYY-MM-DD)	2024-04-15
Name/Print	Joseph H. Karlin	Registration Number	62,471

This collection of information is required by 37 CFR 1.97 and 1.98. The information is required to obtain or retain a benefit by the public which is to file (and by the USPTO to process) an application. Confidentiality is governed by 35 U.S.C. 122 and 37 CFR 1.14. This collection is estimated to take 1 hour to complete, including gathering, preparing and submitting the completed application form to the USPTO. Time will vary depending upon the individual case. Any comments on the amount of time you require to complete this form and/or suggestions for reducing this burden, should be sent to the Chief Information Officer, U.S. Patent and Trademark Office, U.S. Department of Commerce, P.O. Box 1450, Alexandria, VA 22313-1450. DO NOT SEND FEES OR COMPLETED FORMS TO THIS ADDRESS. **SEND TO: Commissioner for Patents, P.O. Box 1450, Alexandria, VA 22313-1450.**

ALL REFERENCES CONSIDERED EXCEPT WHERE LINED THROUGH. /A.E.E/

Privacy Act Statement

The Privacy Act of 1974 (P.L. 93-579) requires that you be given certain information in connection with your submission of the attached form related to a patent application or patent. Accordingly, pursuant to the requirements of the Act, please be advised that: (1) the general authority for the collection of this information is 35 U.S.C. 2(b)(2); (2) furnishing of the information solicited is voluntary; and (3) the principal purpose for which the information is used by the U.S. Patent and Trademark Office is to process and/or examine your submission related to a patent application or patent. If you do not furnish the requested information, the U.S. Patent and Trademark Office may not be able to process and/or examine your submission, which may result in termination of proceedings or abandonment of the application or expiration of the patent.

The information provided by you in this form will be subject to the following routine uses:

1. The information on this form will be treated confidentially to the extent allowed under the Freedom of Information Act (5 U.S.C. 552) and the Privacy Act (5 U.S.C. 552a). Records from this system of records may be disclosed to the Department of Justice to determine whether the Freedom of Information Act requires disclosure of these record s.

2. A record from this system of records may be disclosed, as a routine use, in the course of presenting evidence to a court, magistrate, or administrative tribunal, including disclosures to opposing counsel in the course of settlement negotiations.

3. A record in this system of records may be disclosed, as a routine use, to a Member of Congress submitting a request involving an individual, to whom the record pertains, when the individual has requested assistance from the Member with respect to the subject matter of the record.

4. A record in this system of records may be disclosed, as a routine use, to a contractor of the Agency having need for the information in order to perform a contract. Recipients of information shall be required to comply with the requirements of the Privacy Act of 1974, as amended, pursuant to 5 U.S.C. 552a(m).

5. A record related to an International Application filed under the Patent Cooperation Treaty in this system of records may be disclosed, as a routine use, to the International Bureau of the World Intellectual Property Organization, pursuant to the Patent Cooperation Treaty.

6. A record in this system of records may be disclosed, as a routine use, to another federal agency for purposes of National Security review (35 U.S.C. 181) and for review pursuant to the Atomic Energy Act (42 U.S.C. 218(c)).

7. A record from this system of records may be disclosed, as a routine use, to the Administrator, General Services, or his/her designee, during an inspection of records conducted by GSA as part of that agency's responsibility to recommend improvements in records management practices and programs, under authority of 44 U.S.C. 2904 and 2906. Such disclosure shall be made in accordance with the GSA regulations governing inspection of records for this purpose, and any other relevant (i.e., GSA or Commerce) directive. Such disclosure shall not be used to make determinations about individuals.

8. A record from this system of records may be disclosed, as a routine use, to the public after either publication of the application pursuant to 35 U.S.C. 122(b) or issuance of a patent pursuant to 35 U.S.C. 151. Further, a record may be disclosed, subject to the limitations of 37 CFR 1.14, as a routine use, to the public if the record was filed in an application which became abandoned or in which the proceedings were terminated and which application is referenced by either a published application, an application open to public inspections or an issued patent.

9. A record from this system of records may be disclosed, as a routine use, to a Federal, State, or local law enforcement agency, if the USPTO becomes aware of a violation or potential violation of law or regulation.

ALL REFERENCES CONSIDERED EXCEPT WHERE LINED THROUGH. /A.E.E/

Doc code: IDS
Doc description: Information Disclosure Statement (IDS) Filed

PTO/SB/08a (01-22)
Approved for use through 05/31/2024. OMB 0651-0031
U.S. Patent and Trademark Office; U.S. DEPARTMENT OF COMMERCE
Under the Paperwork Reduction Act of 1995, no persons are required to respond to a collection of information unless it contains a valid OMB control number.

INFORMATION DISCLOSURE STATEMENT BY APPLICANT (Not for submission under 37 CFR 1.99)		
	Application Number	18618609
	Filing Date	2024-03-27
	First Named Inventor	Jae Woong Kim
	Art Unit	N/A
	Examiner Name	Not Yet Assigned
	Attorney Docket Number	LGES 3.3F-1654 CON CON

U.S.PATENTS Remove

Examiner Initial*	Cite No	Patent Number	Kind Code[1]	Issue Date	Name of Patentee or Applicant of cited Document	Pages,Columns,Lines where Relevant Passages or Relevant Figures Appear
	1	3761314		1973-09-25	CAILLEY J	
	2	4822377		1989-04-18	Wolff	
	3	6569565		2003-05-27	Ligeois et al.	
	4	11652232		2023-05-16	Kim et al.	

If you wish to add additional U.S. Patent citation information please click the Add button. Add

U.S.PATENT APPLICATION PUBLICATIONS Remove

Examiner Initial*	Cite No	Publication Number	Kind Code[1]	Publication Date	Name of Patentee or Applicant of cited Document	Pages,Columns,Lines where Relevant Passages or Relevant Figures Appear
	1	20010023038	A1	2001-09-20	Ligeois et al.	
	2	20050003264	A1	2005-01-06	Oh et al.	

ALL REFERENCES CONSIDERED EXCEPT WHERE LINED THROUGH. /A.E.E/

INFORMATION DISCLOSURE STATEMENT BY APPLICANT (Not for submission under 37 CFR 1.99)		
	Application Number	18618609
	Filing Date	2024-03-27
	First Named Inventor	Jae Woong Kim
	Art Unit	N/A
	Examiner Name	Not Yet Assigned
	Attorney Docket Number	LGES 3.3F-1654 CON CON

	3	20050287428	A1	2005-12-29	Cheon et al.	
	4	20050287428	A1	2005-12-29	Cheon et al.	
	5	20050287432	A1	2005-12-29	Cheon et al.	
	6	20060024572	A1	2006-02-02	Lee, Sang-Won	
	7	20060127774	A1	2006-06-15	Kim et al.	
	8	20070196730	A1	2007-08-23	Kozuki	
	9	20100081052	A1	2010-04-01	MORISHIMA et al.	
	10	20100190056	A	2010-07-29	Turner	
	11	20100310926	A1	2010-12-09	WANG et al.	
	12	20110067227	A1	2011-03-24	Sohn	
	13	20110293977	A1	2011-12-01	Kim et al.	

ALL REFERENCES CONSIDERED EXCEPT WHERE LINED THROUGH. /A.E.E/

INFORMATION DISCLOSURE STATEMENT BY APPLICANT (Not for submission under 37 CFR 1.99)		
	Application Number	18618609
	Filing Date	2024-03-27
	First Named Inventor	Jae Woong Kim
	Art Unit	N/A
	Examiner Name	Not Yet Assigned
	Attorney Docket Number	LGES 3.3F-1654 CON CON

	14	20120009450	A1	2012-01-12	Chun	
	15	20120208055	A1	2012-08-16	Ahn	
	16	20130108903	A1	2013-05-02	Martin et al.	
	17	20130252054	A1	2013-09-26	BARONE et al.	
	18	20130344364	A1	2013-12-26	Nanaumi et al.	
	19	20140050956	A1	2014-02-20	HUANG	
	20	20150295270	A1	2015-10-15	Chun	
	21	20160351966	A1	2016-12-01	Batson et al.	
	22	20180145304	A1	2018-05-24	KOGETSU et al.	
	23	20190379028	A1	2019-12-12	Lim et al.	

If you wish to add additional U.S. Published Application citation information please click the Add button. Add

FOREIGN PATENT DOCUMENTS Remove

INFORMATION DISCLOSURE STATEMENT BY APPLICANT

(Not for submission under 37 CFR 1.99)

Application Number	18618609
Filing Date	2024-03-27
First Named Inventor	Jae Woong Kim
Art Unit	N/A
Examiner Name	Not Yet Assigned
Attorney Docket Number	LGES 3.3F-1654 CON CON

Examiner Initial*	Cite No	Foreign Document Number[3]	Country Code[2] ¡	Kind Code[4]	Publication Date	Name of Patentee or Applicant of cited Document	Pages,Columns,Lines where Relevant Passages or Relevant Figures Appear	T[5]
	1	102024936	CN	A	2011-04-20	Samsung Sdi Co., Ltd	U.S. Publication No. 20110067227 is an English language counterpart, which has been previously cited.	☒
	2	201450072	CN	U	2010-05-05	Dongguan Amperex Electronics Technology Co., Ltd	U.S. Publication No. 20100310926 is an English language counterpart, which has been previously cited.	☒
	3	203250828	CN	U	2013-10-23	A123 Systems, Inc	U.S. Publication No. 20130108903 is is an English language counterpart, which has been previously cited.	☒
	4	204577523	CN	U	2015-08-19	Contemporary Amperex Technology Ltd	Machine generated translation attached.	☒
	5	1134820	EP	A1	2001-09-19	Cit Alcatel	U.S. Publication No. 20010023038 A1 and U.S. Patent No. 6,569,565 are English language counterparts.	☒
	6	2003338276	JP	A	2003-11-28	Matsushita Electric Ind Co Ltd	Machine generated translation attached.	☒
	7	2005276459	JP	A	2005-10-06	Sanyo Electric Co	English translation of Abstract only.	☒
	8	2006128106	JP	A	2006-05-18	Samsung Sdi Co Ltd	U.S. Publication No. 20060127774 is an English language counterpart.	☒
	9	2007227137	JP	A	2007-09-06	Matsushita Electric Ind Co Ltd	U.S Publication No. 2007196730 is an English Language counterpart.	☒
	10	2008066040	JP	A	2008-03-21	Sony Corp	Machine generated translation attached.	☒

ALL REFERENCES CONSIDERED EXCEPT WHERE LINED THROUGH. /A.E.E/

INFORMATION DISCLOSURE STATEMENT BY APPLICANT (Not for submission under 37 CFR 1.99)		
	Application Number	18618609
	Filing Date	2024-03-27
	First Named Inventor	Jae Woong Kim
	Art Unit	N/A
	Examiner Name	Not Yet Assigned
	Attorney Docket Number	LGES 3.3F-1654 CON CON

	11	2011065981	JP	A	2011-03-31	Samsung Sdi Co Ltd	U.S Publication No. 2011067227 is an English language counterpart.	☒
	12	2016001575	JP	A	2016-01-07	Denso Corp	Machine generated translation is attached.	☒
	13	2020509534	JP	A	2020-03-26	LG CHEM Ltd.	U.S Publication No. 2019379028 is an English Language counterpart.	☒
	14	4401634	JP	B2	2010-01-20	Matsushita Electric Ind Co Ltd	Machine generated translation attached.	☒
	15	5790576	JP	B2	2015-10-07	Toyota Industries Corp	Machine generated translation is attached.	☒
	16	H0935701	JP	A	1997-02-07	Denso Corp	Machine generated translation attached.	☒
	17	H11339756	JP	A	1999-12-10	Toyota Central Res & Dev	Machine generated translation attached.	☒
	18	100515833	KR	B1	2005-09-21	Samsung Sdi Co., Ltd	U.S. Publication No. 20050003264 A1 is an English language counterpart.	☒
	19	100599710	KR	B1	2006-07-12	Samsung Sdi Co., Ltd	U.S. Publication No. 20060024572 A1 is an English language counterpart.	☒
	20	100599749	KR	B1	2006-07-12	Samsung Sdi Co., Ltd	U.S. Publication No. 20050287428 A1 is an English language counterpart.	☒
	21	20000051740	KR	A	2000-08-16	Samsung Sdi Co., Ltd	Machine generated translation is attached.	☒

ALL REFERENCES CONSIDERED EXCEPT WHERE LINED THROUGH. /A.E.E/

INFORMATION DISCLOSURE STATEMENT BY APPLICANT (Not for submission under 37 CFR 1.99)		
	Application Number	18618609
	Filing Date	2024-03-27
	First Named Inventor	Jae Woong Kim
	Art Unit	N/A
	Examiner Name	Not Yet Assigned
	Attorney Docket Number	LGES 3.3F-1654 CON CON

	22	20050121904	KR	A	2005-12-28	Samsung Sdi Co., Ltd	U.S. Publication No. 20050287428 A1 is an English language counterpart.	☒
	23	20050121914	KR	A	2005-12-28	Samsung Sdi Co., Ltd	U.S. Publication No. 20050287432 A1 is an English language counterpart.	☒
	24	20060022358	KR	A	2006-03-10	Samsung Sdi Co., Ltd	Machine generated translation is attached.	☒
	25	20100071941	KR	A	2010-06-29	Lg Chemical Ltd	U.S. Publication No. 20110293977 A1 is an English language counterpart.	☒
	26	20120006389	KR	A	2012-01-18	Samsung Sdi Co., Ltd	U.S. Publication No. 20120009450 A1 is an English language counterpart.	☒
	27	20120092367	KR	A	2012-08-21	Samsung Sdi Co., Ltd	U.S. Publication No. 20120208055 A1 is an English language counterpart.	☒
	28	20130073329	KR	A	2013-07-03	Datechnology Co., Ltd	Machine generated translation is attached.	☒
	29	2015-0117135	KR	A	2015-10-19	Samsung Sdi Co Ltd	U.S. Publication No. 20150295270 A1 is an English language counterpart.	☒
	30	20160113612	KR	A	2016-09-30	A123 Systems LLC	U.S. Publication No. 20160351966 A1 is an English language counterpart.	☒
	31	20170006437	KR	A	2017-01-18	Lg Chemical Ltd	Machine generated translation is attached.	☒
	32	2012086690	WO	A1	2012-06-28	Hitachi Vehicle Energy, Ltd	US Publication No. 2013344364 is an English language counterpart.	☒

ALL REFERENCES CONSIDERED EXCEPT WHERE LINED THROUGH. /A.E.E/

INFORMATION DISCLOSURE STATEMENT BY APPLICANT (Not for submission under 37 CFR 1.99)		
	Application Number	18618609
	Filing Date	2024-03-27
	First Named Inventor	Jae Woong Kim
	Art Unit	N/A
	Examiner Name	Not Yet Assigned
	Attorney Docket Number	LGES 3.3F-1654 CON CON

	33	2014188501	WO	A1	2014-11-27	Hitachi Automotive Systems, Ltd	Machine generated translation attached.	☒

If you wish to add additional Foreign Patent Document citation information please click the Add button Add

NON-PATENT LITERATURE DOCUMENTS Remove

Examiner Initials*	Cite No	Include name of the author (in CAPITAL LETTERS), title of the article (when appropriate), title of the item (book, magazine, journal, serial, symposium, catalog, etc), date, pages(s), volume-issue number(s), publisher, city and/or country where published.	T[5]
	1	International Search Report from Application No. PCT/KR2018/004366 mailed July 20, 2018, pages 1 - 2	☒
	2	Extended European Seach Report including Written Opinion for Application No. EP18784869.2 dated January 21, 2020, 5 pages.	☐
	3	Chiinese Search Report for Application No. 201880025247, dated August 24, 2021, 2 pages.	☐

If you wish to add additional non-patent literature document citation information please click the Add button Add

EXAMINER SIGNATURE

Examiner Signature	/ALIX E EGGERDING/	Date Considered	10/08/2024

*EXAMINER: Initial if reference considered, whether or not citation is in conformance with MPEP 609. Draw line through a citation if not in conformance and not considered. Include copy of this form with next communication to applicant.

[1] See Kind Codes of USPTO Patent Documents at www.USPTO.GOV or MPEP 901.04. [2] Enter office that issued the document, by the two-letter code (WIPO Standard ST.3). [3] For Japanese patent documents, the indication of the year of the reign of the Emperor must precede the serial number of the patent document. [4] Kind of document by the appropriate symbols as indicated on the document under WIPO Standard ST.16 if possible. [5] Applicant is to place a check mark here if English language translation is attached.

ALL REFERENCES CONSIDERED EXCEPT WHERE LINED THROUGH. /A.E.E/

INFORMATION DISCLOSURE STATEMENT BY APPLICANT (Not for submission under 37 CFR 1.99)		
	Application Number	18618609
	Filing Date	2024-03-27
	First Named Inventor	Jae Woong Kim
	Art Unit	RD00
	Examiner Name	A. E. Eggerding
	Attorney Docket Number	LGES 3.3F-1654 CON CON

CERTIFICATION STATEMENT

Please see 37 CFR 1.97(e) to make the appropriate selection(s):

☐ That each item of information contained in the information disclosure statement was first cited in any communication from a foreign patent office in a counterpart foreign application not more than three months prior to the filing of the information disclosure statement. See 37 CFR 1.97(e)(1).

OR

☐ That no item of information contained in the information disclosure statement was cited in a communication from a foreign patent office in a counterpart foreign application, and, to the knowledge of the person signing the certification after making reasonable inquiry, no item of information contained in the information disclosure statement was known to any individual designated in 37 CFR 1.56(c) more than three months prior to the filing of the information disclosure statement. See 37 CFR 1.97(e)(2).

☐ See attached certification statement.

☒ A certification statement is not submitted herewith.

FEE

☐ The fee set forth in 37 CFR 1.17 (p) has been submitted herewith.

COPIES

☐ An identification of an earlier application pursuant to 37 CFR 1.98 (d) (1) is attached.

SIGNATURE

A signature of the applicant or representative is required in accordance with CFR 1.33, 10.18. Please see CFR 1.4(d) for the form of the signature.

Signature	/Joseph H. Karlin/	Date (YYYY-MM-DD)	2024-10-03
Name/Print	Joseph H. Karlin	Registration Number	62,471

This collection of information is required by 37 CFR 1.97 and 1.98. The information is required to obtain or retain a benefit by the public which is to file (and by the USPTO to process) an application. Confidentiality is governed by 35 U.S.C. 122 and 37 CFR 1.14. This collection is estimated to take 1 hour to complete, including gathering, preparing and submitting the completed application form to the USPTO. Time will vary depending upon the individual case. Any comments on the amount of time you require to complete this form and/or suggestions for reducing this burden, should be sent to the Chief Information Officer, U.S. Patent and Trademark Office, U.S. Department of Commerce, P.O. Box 1450, Alexandria, VA 22313-1450. DO NOT SEND FEES OR COMPLETED FORMS TO THIS ADDRESS. **SEND TO: Commissioner for Patents, P.O. Box 1450, Alexandria, VA 22313-1450.**

ALL REFERENCES CONSIDERED EXCEPT WHERE LINED THROUGH. /A.E.E/

Privacy Act Statement

The Privacy Act of 1974 (P.L. 93-579) requires that you be given certain information in connection with your submission of the attached form related to a patent application or patent. Accordingly, pursuant to the requirements of the Act, please be advised that: (1) the general authority for the collection of this information is 35 U.S.C. 2(b)(2); (2) furnishing of the information solicited is voluntary; and (3) the principal purpose for which the information is used by the U.S. Patent and Trademark Office is to process and/or examine your submission related to a patent application or patent. If you do not furnish the requested information, the U.S. Patent and Trademark Office may not be able to process and/or examine your submission, which may result in termination of proceedings or abandonment of the application or expiration of the patent.

The information provided by you in this form will be subject to the following routine uses:

1. The information on this form will be treated confidentially to the extent allowed under the Freedom of Information Act (5 U.S.C. 552) and the Privacy Act (5 U.S.C. 552a). Records from this system of records may be disclosed to the Department of Justice to determine whether the Freedom of Information Act requires disclosure of these record s.

2. A record from this system of records may be disclosed, as a routine use, in the course of presenting evidence to a court, magistrate, or administrative tribunal, including disclosures to opposing counsel in the course of settlement negotiations.

3. A record in this system of records may be disclosed, as a routine use, to a Member of Congress submitting a request involving an individual, to whom the record pertains, when the individual has requested assistance from the Member with respect to the subject matter of the record.

4. A record in this system of records may be disclosed, as a routine use, to a contractor of the Agency having need for the information in order to perform a contract. Recipients of information shall be required to comply with the requirements of the Privacy Act of 1974, as amended, pursuant to 5 U.S.C. 552a(m).

5. A record related to an International Application filed under the Patent Cooperation Treaty in this system of records may be disclosed, as a routine use, to the International Bureau of the World Intellectual Property Organization, pursuant to the Patent Cooperation Treaty.

6. A record in this system of records may be disclosed, as a routine use, to another federal agency for purposes of National Security review (35 U.S.C. 181) and for review pursuant to the Atomic Energy Act (42 U.S.C. 218(c)).

7. A record from this system of records may be disclosed, as a routine use, to the Administrator, General Services, or his/her designee, during an inspection of records conducted by GSA as part of that agency's responsibility to recommend improvements in records management practices and programs, under authority of 44 U.S.C. 2904 and 2906. Such disclosure shall be made in accordance with the GSA regulations governing inspection of records for this purpose, and any other relevant (i.e., GSA or Commerce) directive. Such disclosure shall not be used to make determinations about individuals.

8. A record from this system of records may be disclosed, as a routine use, to the public after either publication of the application pursuant to 35 U.S.C. 122(b) or issuance of a patent pursuant to 35 U.S.C. 151. Further, a record may be disclosed, subject to the limitations of 37 CFR 1.14, as a routine use, to the public if the record was filed in an application which became abandoned or in which the proceedings were terminated and which application is referenced by either a published application, an application open to public inspections or an issued patent.

9. A record from this system of records may be disclosed, as a routine use, to a Federal, State, or local law enforcement agency, if the USPTO becomes aware of a violation or potential violation of law or regulation.

ALL REFERENCES CONSIDERED EXCEPT WHERE LINED THROUGH. /A.E.E/

Doc code: IDS
Doc description: Information Disclosure Statement (IDS) Filed

PTO/SB/08a (01-22)
Approved for use through 05/31/2024. OMB 0651-0031
U.S. Patent and Trademark Office; U.S. DEPARTMENT OF COMMERCE
Under the Paperwork Reduction Act of 1995, no persons are required to respond to a collection of information unless it contains a valid OMB control number.

INFORMATION DISCLOSURE STATEMENT BY APPLICANT (**Not for submission under 37 CFR 1.99)**	Application Number	18618609
	Filing Date	2024-03-27
	First Named Inventor	Jae Woong Kim
	Art Unit	RD00
	Examiner Name	A. E. Eggerding
	Attorney Docket Number	LGES 3.3F-1654 CON CON

U.S.PATENTS Remove

Examiner Initial*	Cite No	Patent Number	Kind Code[1]	Issue Date	Name of Patentee or Applicant of cited Document	Pages,Columns,Lines where Relevant Passages or Relevant Figures Appear
	1	11973177		2024-04-30	Kim et al.	

If you wish to add additional U.S. Patent citation information please click the Add button. Add

U.S.PATENT APPLICATION PUBLICATIONS Remove

Examiner Initial*	Cite No	Publication Number	Kind Code[1]	Publication Date	Name of Patentee or Applicant of cited Document	Pages,Columns,Lines where Relevant Passages or Relevant Figures Appear
	1					

If you wish to add additional U.S. Published Application citation information please click the Add button. Add

FOREIGN PATENT DOCUMENTS Remove

Examiner Initial*	Cite No	Foreign Document Number[3]	Country Code[2] ¡	Kind Code[4]	Publication Date	Name of Patentee or Applicant of cited Document	Pages,Columns,Lines where Relevant Passages or Relevant Figures Appear	T[5]
	1							☐

If you wish to add additional Foreign Patent Document citation information please click the Add button Add

NON-PATENT LITERATURE DOCUMENTS Remove

Examiner Initials*	Cite No	Include name of the author (in CAPITAL LETTERS), title of the article (when appropriate), title of the item (book, magazine, journal, serial, symposium, catalog, etc), date, pages(s), volume-issue number(s), publisher, city and/or country where published.	T[5]

ALL REFERENCES CONSIDERED EXCEPT WHERE LINED THROUGH. /A.E.E/

INFORMATION DISCLOSURE STATEMENT BY APPLICANT (Not for submission under 37 CFR 1.99)		
	Application Number	18618609
	Filing Date	2024-03-27
	First Named Inventor	Jae Woong Kim
	Art Unit	RD00
	Examiner Name	A. E. Eggerding
	Attorney Docket Number	LGES 3.3F-1654 CON CON

	1		☐

If you wish to add additional non-patent literature document citation information please click the Add button Add

EXAMINER SIGNATURE

Examiner Signature	/ALIX E EGGERDING/	Date Considered	10/08/2024

*EXAMINER: Initial if reference considered, whether or not citation is in conformance with MPEP 609. Draw line through a citation if not in conformance and not considered. Include copy of this form with next communication to applicant.

[1] See Kind Codes of USPTO Patent Documents at www.USPTO.GOV or MPEP 901.04. [2] Enter office that issued the document, by the two-letter code (WIPO Standard ST.3). [3] For Japanese patent documents, the indication of the year of the reign of the Emperor must precede the serial number of the patent document. [4] Kind of document by the appropriate symbols as indicated on the document under WIPO Standard ST.16 if possible. [5] Applicant is to place a check mark here if English language translation is attached.

ALL REFERENCES CONSIDERED EXCEPT WHERE LINED THROUGH. /A.E.E/

UNITED STATES
PATENT AND TRADEMARK OFFICE

P.O. Box 1450
Alexandria, VA 22313 - 1450
www.uspto.gov

ELECTRONIC ACKNOWLEDGEMENT RECEIPT

APPLICATION #	RECEIPT DATE / TIME	ATTORNEY DOCKET #
18/618,609	**10/22/2024 03:27:23 PM Z ET**	**LGES 3.3F-1654 CON CON**

Title of Invention

Secondary Battery And Method For Manufacturing The Same

Application Information

APPLICATION TYPE	Utility - Nonprovisional Application under 35 USC 111(a)	PATENT #	-
CONFIRMATION #	3847	FILED BY	Sharon McGee
PATENT CENTER #	67672868	FILING DATE	03/27/2024
CUSTOMER #	86765	FIRST NAMED INVENTOR	Jae Woong Kim
CORRESPONDENCE ADDRESS	-	AUTHORIZED BY	Kevin Kocun

Documents

TOTAL DOCUMENTS: 1

DOCUMENT	PAGES	DESCRIPTION	SIZE (KB)
LGES5172 - Request for Corrected Filing Receipt.pdf	1	Request for Corrected Filing Receipt	22 KB

Digest

DOCUMENT	MESSAGE DIGEST(SHA-512)
LGES5172 - Request for Corrected Filing Receipt.pdf	0DF23BEA38F28E8C9D7421144F2498E3A8A9343A2B504E4D0B6470B3E301035DA4A990976BA9174CCD730BC3A462A3461722015FD20ADD3AE027BB45A3FF488A

This Acknowledgement Receipt evidences receipt on the noted date by the USPTO of the indicated documents, characterized by the applicant, and including page counts, where applicable. It serves as evidence of receipt similar to a Post Card, as described in MPEP 503.

New Applications Under 35 U.S.C. 111

If a new application is being filed and the application includes the necessary components for filing date (see 37 CFR 1.53(b)-(d) and MPEP 506), a Filing Receipt (37 CFR 1.54) will be issued in due course and the date shown on this Acknowledgement Receipt will establish the filing date of the application

National Stage of an International Application under 35 U.S.C. 371

If a timely submission to enter the national stage of an international application is compliant with the conditions of 35 U.S.C. 371 and other applicable requirements a Form PCT/DO/EO/903 indicating acceptance of the application as a national stage submission under 35 U.S.C. 371 will be issued in addition to the Filing Receipt, in due course.

New International Application Filed with the USPTO as a Receiving Office

If a new international application is being filed and the international application includes the necessary components for an international filing date (see PCT Article 11 and MPEP 1810), a Notification of the International Application Number and of the International Filing Date (Form PCT/RO/105) will be issued in due course, subject to prescriptions concerning national security, and the date shown on this Acknowledgement Receipt will establish the international filing date of the application.

I hereby certify that this paper (along with any paper referred to as being attached or enclosed) is being transmitted via the Office electronic filing system in accordance with 37 C.F.R. § 1.6(a)(4).

Dated: October 22, 2024
Electronic Signature for Joseph H. Karlin: /Joseph H. Karlin/

Docket No. LGES 3.3F-1654 CON CON
(PATENT)

IN THE UNITED STATES PATENT AND TRADEMARK OFFICE

In re Patent Application of:
Kim et al.

Application No.: 18/618,609

Confirmation No.: 3847

Filed: March 27, 2024

Art Unit: 1729

For: Secondary Battery And Method For Manufacturing The Same

Examiner: A. E. Eggerding

REQUEST FOR CORRECTED FILING RECEIPT

Office of Initial Patent Examination's Filing Receipt Corrections
Commissioner for Patents
P.O. Box 1450
Alexandria, VA 22313-1450

Dear Commissioner:

Please note that the Filing Receipt for the above-identified case contains the following error:

In the section entitled "Inventor(s)," please correct Inventor Kim's residence to read

-- Daejeon, KOREA, REPUBLIC OF – as indicated in the Application Data Sheet dated March 27, 2024.

Kindly issue a corrected filing receipt for the above-identified application as soon as possible.

Dated: October 22, 2024

Respectfully submitted,

Electronic signature: /Joseph H. Karlin/
Joseph H. Karlin
Registration No.: 62,471
LERNER DAVID LLP
20 Commerce Dr.
Cranford, New Jersey 07016
(908) 654-5000
Attorney for Applicant

8262395

UNITED STATES PATENT AND TRADEMARK OFFICE

UNITED STATES DEPARTMENT OF COMMERCE
United States Patent and Trademark Office
Address: COMMISSIONER FOR PATENTS
P.O. Box 1450
Alexandria, Virginia 22313-1450
www.uspto.gov

APPLICATION NUMBER	FILING or 371(c) DATE	GRP ART UNIT	FIL FEE REC'D	ATTY.DOCKET.NO	TOT CLAIMS	IND CLAIMS
18/618,609	03/27/2024	RD00	1820	LGES 3.3F-1654 CON CON	14	1

CONFIRMATION NO. 3847

CORRECTED FILING RECEIPT

OC000000079747315

86765
LG
Lerner David LLP
20 Commerce Drive
Cranford, NJ 07016

Date Mailed: 10/24/2024

Receipt is acknowledged of this non-provisional utility patent application. The application will be taken up for examination in due course. Applicant will be notified as to the results of the examination. Any correspondence concerning the application must include the following identification information: the U.S. APPLICATION NUMBER, FILING DATE, NAME OF FIRST INVENTOR, and TITLE OF INVENTION. Fees transmitted by check or draft are subject to collection.

Please verify the accuracy of the data presented on this receipt. If an error is noted on this Filing Receipt, please submit a written request for a corrected Filing Receipt, including a properly marked-up ADS showing the changes with strike-through for deletions and underlining for additions. If you received a "Notice to File Missing Parts" or other Notice requiring a response for this application, please submit any request for correction to this Filing Receipt with your reply to the Notice. When the USPTO processes the reply to the Notice, the USPTO will generate another Filing Receipt incorporating the requested corrections provided that the request is grantable.

Inventor(s)

Jae Woong Kim, Daejeon, KOREA, REPUBLIC OF;
Hyoung Kwon Kim, Daejeon, KOREA, REPUBLIC OF;
Sang Uck Kim, Daejeon, KOREA, REPUBLIC OF;

Applicant(s)

LG Energy Solution, Ltd., Seoul, KOREA, REPUBLIC OF;

Assignment For Published Patent Application

LG Energy Solution, Ltd., Seoul, KOREA, REPUBLIC OF

Power of Attorney: The patent practitioners associated with Customer Number 86765

Domestic Priority data as claimed by applicant

This application is a CON of 18/132,719 04/10/2023 PAT 11,973,177
which is a CON of 16/498,751 09/27/2019 PAT 11,652,232
which is a 371 of PCT/KR2018/004366 04/13/2018

Foreign Applications (You may be eligible to benefit from the **Patent Prosecution Highway** program at the USPTO. Please see http://www.uspto.gov for more information.)
REPUBLIC OF KOREA 10-2018-0043191 04/13/2018 No Access Code Provided
REPUBLIC OF KOREA 10-2017-0048645 04/14/2017 No Access Code Provided

Permission to Access Application via Priority Document Exchange: Yes

Permission to Access Search Results: Yes

Applicant may provide or rescind an authorization for access using Form PTO/SB/39 or Form PTO/SB/69 as appropriate.

If Required, Foreign Filing License Granted: 04/04/2024
The country code and number of your priority application, to be used for filing abroad under the Paris Convention, is **US 18/618,609**
Projected Publication Date: 07/18/2024
Non-Publication Request: No
Early Publication Request: No
Title

Secondary Battery And Method For Manufacturing The Same

Preliminary Class

429

Statement under 37 CFR 1.55 or 1.78 for AIA (First Inventor to File) Transition Applications: No

PROTECTING YOUR INVENTION OUTSIDE THE UNITED STATES

Since the rights granted by a U.S. patent extend only throughout the territory of the United States and have no effect in a foreign country, an inventor who wishes patent protection in another country must apply for a patent in a specific country or in regional patent offices. Applicants may wish to consider the filing of an international application under the Patent Cooperation Treaty (PCT). An international (PCT) application generally has the same effect as a regular national patent application in each PCT-member country. The PCT process **simplifies** the filing of patent applications on the same invention in member countries, but **does not result** in a grant of "an international patent" and does not eliminate the need of applicants to file additional documents and fees in countries where patent protection is desired.

Almost every country has its own patent law, and a person desiring a patent in a particular country must make an application for patent in that country in accordance with its particular laws. Since the laws of many countries differ in various respects from the patent law of the United States, applicants are advised to seek guidance from specific foreign countries to ensure that patent rights are not lost prematurely.

Applicants also are advised that in the case of inventions made in the United States, the Director of the USPTO must issue a license before applicants can apply for a patent in a foreign country. The filing of a U.S. patent application serves as a request for a foreign filing license. The application's filing receipt contains further information and guidance as to the status of applicant's license for foreign filing.

Applicants may wish to consult the USPTO booklet, "General Information Concerning Patents" (specifically, the section entitled "Treaties and Foreign Patents") for more information on timeframes and deadlines for filing foreign patent applications. The guide is available either by contacting the USPTO Contact Center at 800-786-9199, or it can be viewed on the USPTO website at http://www.uspto.gov/web/offices/pac/doc/general/index.html.

For information on preventing theft of your intellectual property (patents, trademarks and copyrights), you may wish to consult the U.S. Government website, http://www.stopfakes.gov. Part of a Department of Commerce initiative, this website includes self-help "toolkits" giving innovators guidance on how to protect intellectual property in specific

countries such as China, Korea and Mexico. For questions regarding patent enforcement issues, applicants may call the U.S. Government hotline at 1-866-999-HALT (1-866-999-4258).

LICENSE FOR FOREIGN FILING UNDER

Title 35, United States Code, Section 184

Title 37, Code of Federal Regulations, 5.11 & 5.15

GRANTED

The applicant has been granted a license under 35 U.S.C. 184, if the phrase "IF REQUIRED, FOREIGN FILING LICENSE GRANTED" followed by a date appears on this form. Such licenses are issued in all applications where the conditions for issuance of a license have been met, regardless of whether or not a license may be required as set forth in 37 CFR 5.15. The scope and limitations of this license are set forth in 37 CFR 5.15(a) unless an earlier license has been issued under 37 CFR 5.15(b). The license is subject to revocation upon written notification. The date indicated is the effective date of the license, unless an earlier license of similar scope has been granted under 37 CFR 5.13 or 5.14.

This license is to be retained by the licensee and may be used at any time on or after the effective date thereof unless it is revoked. This license is automatically transferred to any related applications(s) filed under 37 CFR 1.53(d). This license is not retroactive.

The grant of a license does not in any way lessen the responsibility of a licensee for the security of the subject matter as imposed by any Government contract or the provisions of existing laws relating to espionage and the national security or the export of technical data. Licensees should apprise themselves of current regulations especially with respect to certain countries, of other agencies, particularly the Office of Defense Trade Controls, Department of State (with respect to Arms, Munitions and Implements of War (22 CFR 121-128)); the Bureau of Industry and Security, Department of Commerce (15 CFR parts 730-774); the Office of Foreign AssetsControl, Department of Treasury (31 CFR Parts 500+) and the Department of Energy.

NOT GRANTED

No license under 35 U.S.C. 184 has been granted at this time, if the phrase "IF REQUIRED, FOREIGN FILING LICENSE GRANTED" DOES NOT appear on this form. Applicant may still petition for a license under 37 CFR 5.12, if a license is desired before the expiration of 6 months from the filing date of the application. If 6 months has lapsed from the filing date of this application and the licensee has not received any indication of a secrecy order under 35 U.S.C. 181, the licensee may foreign file the application pursuant to 37 CFR 5.15(b).

SelectUSA

The United States represents the largest, most dynamic marketplace in the world and is an unparalleled location for business investment, innovation, and commercialization of new technologies. The U.S. offers tremendous resources and advantages for those who invest and manufacture goods here. Through SelectUSA, our nation works to promote and facilitate business investment. SelectUSA provides information assistance to the international investor community; serves as an ombudsman for existing and potential investors; advocates on behalf of U.S. cities, states, and regions competing for global investment; and counsels U.S. economic development organizations on investment attraction best practices. To learn more about why the United States is the best country in the world to develop

technology, manufacture products, deliver services, and grow your business, visit http://www.SelectUSA.gov or call +1-202-482-6800.

UNITED STATES
PATENT AND TRADEMARK OFFICE

P.O. Box 1450
Alexandria, VA 22313 - 1450
www.uspto.gov

ELECTRONIC ACKNOWLEDGEMENT RECEIPT

APPLICATION #	RECEIPT DATE / TIME	ATTORNEY DOCKET #
18/618,609	**11/14/2024 03:34:37 PM Z ET**	**LGES 3.3F-1654 CON CON**

Title of Invention

Secondary Battery And Method For Manufacturing The Same

Application Information

APPLICATION TYPE	Utility - Nonprovisional Application under 35 USC 111(a)	PATENT #	-
CONFIRMATION #	3847	FILED BY	Liz Semon
PATENT CENTER #	67969405	FILING DATE	03/27/2024
CUSTOMER #	86765	FIRST NAMED INVENTOR	Jae Woong Kim
CORRESPONDENCE ADDRESS	-	AUTHORIZED BY	Kevin Kocun

Documents

TOTAL DOCUMENTS: 18

DOCUMENT	PAGES	DESCRIPTION	SIZE (KB)
CN101714624A-FOR.pdf	11	Foreign Reference	586 KB
9CN101714624Amachine translation from the EPO-FOR.pdf	15	Foreign Reference	103 KB
JP2000077078A-FOR.pdf	10	Foreign Reference	625 KB
JP2000077078A - trans-FOR.pdf	9	Foreign Reference	286 KB
JP2000228182A-FOR.pdf	12	Foreign Reference	622 KB
6JP2000-228182Amachine translation from the EPO-FOR.pdf	17	Foreign Reference	125 KB
JP2006324049A-FOR.pdf	14	Foreign Reference	588 KB

JP2006324049A - trans-FOR.pdf	11	Foreign Reference	301 KB
JP5117133B2-FOR.pdf	9	Foreign Reference	303 KB
JP5117133B2 - trans-FOR.pdf	6	Foreign Reference	247 KB
JP6045286B2-FOR.pdf	18	Foreign Reference	706 KB
JP6045286B2 - trans-FOR.pdf	9	Foreign Reference	328 KB
KR20160009406A-FOR.pdf	10	Foreign Reference	383 KB
7KR2016-0009406Amachine translation from the KIPO-FOR.pdf	8	Foreign Reference	3027 KB
EP 241875699 EESR 002-NPL.pdf	9	Non Patent Literature	3966 KB
EP 241876697 EESR 2-NPL.pdf	9	Non Patent Literature	3860 KB
LGES5172 - Information Disclosure Statement Fillable PDF.pdf	5	Information Disclosure Statement (IDS) Form (SB08)	1313 KB
IDS - Information Disclosure Statement - Reference Enclosed LD-458.pdf	1	Transmittal Letter	23 KB

Digest

DOCUMENT	MESSAGE DIGEST(SHA-512)
CN101714624A-FOR.pdf	470E7FD7F195B659821AB29A5B6C4BDCEFEBAD6595E3C6A19E27865AEFC7B9EFA4B5ECB8688A4FB56D4404677EB5BF2C98587A5541249911C0A3C4C50452FAAE
9CN101714624Amachine translation from the EPO-FOR.pdf	82BF0F3E3A36FB01C2630CE9010D192F8949B42A361C7438E0C1AB408D17562C4A7231AB6DF1D5D174FA7C80CF2540853A2FBF886BF332DA5D56A66681BF4842
JP2000077078A-FOR.pdf	3E53F9358DD09B4E290F4016DD8100F75C04800BBF435CC2BA8DEDE481DDD963F640E7BF24172DE240400B306B4CB7C9A41FBC0D832ABD31FBB104C7652BA24A
JP2000077078A - trans-FOR.pdf	959BB4B4208617AD394787B322860D5245B3DB4A3B39E3CE23A0F84A5BB393FCD762A08B3415321CA0475220E6EDFA7D496FA29293375F4DC5E6F4EF75D663D5

JP2000228182A-FOR.pdf	626B016D8FD9AC8082FF61B87E985E635976DF2621DD5101F19FBD3505BEFD12D4E21886395D2683562A9DD7AB01278FD7ADC9A0CEA7A700CA8B5FB26E13F9D2
6JP2000-228182Amachine translation from the EPO-FOR.pdf	CB2B4CC57318003EE455BB967A477C24AD6EDE00639F351F7BBBCB56BF21D2B157C5F194CE423163B43BCA00612B98F38F3EF5054746FF11B205BFB1780176A4
JP2006324049A-FOR.pdf	9897CDDB1836D64746C27EA6F9C2DE3E2FAE4BF785AC0A681144EAA8F9D208CDAC1A8D4DE8BC6C2DA0F81832940C9B156F775B60F7806C7EC0B6B259AEC80CB1
JP2006324049A - trans-FOR.pdf	BFFA7D2655686535AFFB489511B4DF3525669397BC52D26DDD2F00CE4973CC7A8931E20C60CFC2C47D8D8EDFF4E33E5AA3B9AE63034F8F699757AE93BCD15043
JP5117133B2-FOR.pdf	A031A49766A6BEBE537E0888545D00FFB42C44E1B78E0856B4A7266CA4E457C89E9F564B827C115C54E537A617E8504FB6DCCC4DA8C52A98598929EA9BC30EFA
JP5117133B2 - trans-FOR.pdf	3C7F6F53EABE9DC1DB3C2F5A9A4D98B07882F7806A2CF87911D2DEE16E530F435D347700563A574084902AE9B55F3165017DEB989C284594C61C6605E2879B8D
JP6045286B2-FOR.pdf	E2F2EAEE5B9A2B6BCAF61495EDC00904008536BF844905880B6214C0B83BFA994DD68208D20E7FF74B9ECDD9EEF3124DDBA94B6DB877C1BC73F52065C3BC4CDB
JP6045286B2 - trans-FOR.pdf	BF28CAED54122121C83CDF5BD1A32B649C1FFE2D04088122FF9908057A13B5258D36A0DFB4461FCB8958066CE1F9F6BABF2F50B84A86D815116E2FF7C4BA6B58
KR20160009406A-FOR.pdf	DCD57FECD26253D2726D484FE27E331AF996B3AF0D577D727F6EAB2193920B430E22CBC1CA3BEF520CF60CD9930B4A89CFFEF24E45612328AA7F956CB8667C2B
7KR2016-0009406Amachine translation from the KIPO-FOR.pdf	354C1F3C9FA7867AC66D1C94F5948450E11E3A3592E14A17FAA0674694BA945CDB833BC06D84EDD14F2FB079AB1F81EEC24F468025166E4030BE6AE632FC731A
EP 241875699 EESR 002-NPL.pdf	2F5B4977638CE3414A08A5505630FE53495E872B3D610EC442754EEAC09A3945237ACEA252F51A363604AB7EB7126CFA5A8A513FF60D606CCC91783C80E8AC2F
EP 241876697 EESR 2-NPL.pdf	A32F1522670A7DE0B5DC56C3DCEAED6399238A53BE50B85F40CE6A855A77A3A25D50E014B7801C05F3BFA5569E9F4FD56A7EA60D5F71B3DBECFF65DF9F8098E1
LGES5172 - Information Disclosure Statement Fillable PDF.pdf	FD26804876270A12BBBAADA2E5F6656042651CFC93EEBBAFF948250D0103F10C68F228095A073FCA633384D4488FB0223B86CC20DB475CA8EB91DEB37D3E69A9
IDS - Information Disclosure Statement - Reference	9DEC588D631EDCBA7FB7DFF69E3A6046ECBB3B6507F1651187C4CFEAB0C357B9BA23C41D60EE6B6FE08D129A49374042

This Acknowledgement Receipt evidences receipt on the noted date by the USPTO of the indicated documents, characterized by the applicant, and including page counts, where applicable. It serves as evidence of receipt similar to a Post Card, as described in MPEP 503.

New Applications Under 35 U.S.C. 111

If a new application is being filed and the application includes the necessary components for filing date (see 37 CFR 1.53(b)-(d) and MPEP 506), a Filing Receipt (37 CFR 1.54) will be issued in due course and the date shown on this Acknowledgement Receipt will establish the filing date of the application

National Stage of an International Application under 35 U.S.C. 371

If a timely submission to enter the national stage of an international application is compliant with the conditions of 35 U.S.C. 371 and other applicable requirements a Form PCT/DO/EO/903 indicating acceptance of the application as a national stage submission under 35 U.S.C. 371 will be issued in addition to the Filing Receipt, in due course.

New International Application Filed with the USPTO as a Receiving Office

If a new international application is being filed and the international application includes the necessary components for an international filing date (see PCT Article 11 and MPEP 1810), a Notification of the International Application Number and of the International Filing Date (Form PCT/RO/105) will be issued in due course, subject to prescriptions concerning national security, and the date shown on this Acknowledgement Receipt will establish the international filing date of the application.

INFORMATION DISCLOSURE STATEMENT BY APPLICANT (Not for submission under 37 CFR 1.99)		
	Application Number	18618609
	Filing Date	2024-03-27
	First Named Inventor	Jae Woong Kim
	Art Unit	1729
	Examiner Name	A. E. Eggerding
	Attorney Docket Number	LGES 3.3F-1654 CON CON

CERTIFICATION STATEMENT

Please see 37 CFR 1.97(e) to make the appropriate selection(s):

☐ That each item of information contained in the information disclosure statement was first cited in any communication from a foreign patent office in a counterpart foreign application not more than three months prior to the filing of the information disclosure statement. See 37 CFR 1.97(e)(1).

OR

☐ That no item of information contained in the information disclosure statement was cited in a communication from a foreign patent office in a counterpart foreign application, and, to the knowledge of the person signing the certification after making reasonable inquiry, no item of information contained in the information disclosure statement was known to any individual designated in 37 CFR 1.56(c) more than three months prior to the filing of the information disclosure statement. See 37 CFR 1.97(e)(2).

☐ See attached certification statement.

☒ A certification statement is not submitted herewith.

FEE

☒ The fee set forth in 37 CFR 1.17 (p) has been submitted herewith.

COPIES

☐ An identification of an earlier application pursuant to 37 CFR 1.98 (d) (1) is attached.

SIGNATURE

A signature of the applicant or representative is required in accordance with CFR 1.33, 10.18. Please see CFR 1.4(d) for the form of the signature.

Signature	/Joseph H. Karlin/	Date (YYYY-MM-DD)	2024-11-14
Name/Print	Joseph H. Karlin	Registration Number	62,471

This collection of information is required by 37 CFR 1.97 and 1.98. The information is required to obtain or retain a benefit by the public which is to file (and by the USPTO to process) an application. Confidentiality is governed by 35 U.S.C. 122 and 37 CFR 1.14. This collection is estimated to take 1 hour to complete, including gathering, preparing and submitting the completed application form to the USPTO. Time will vary depending upon the individual case. Any comments on the amount of time you require to complete this form and/or suggestions for reducing this burden, should be sent to the Chief Information Officer, U.S. Patent and Trademark Office, U.S. Department of Commerce, P.O. Box 1450, Alexandria, VA 22313-1450. DO NOT SEND FEES OR COMPLETED FORMS TO THIS ADDRESS. **SEND TO: Commissioner for Patents, P.O. Box 1450, Alexandria, VA 22313-1450.**

Privacy Act Statement

The Privacy Act of 1974 (P.L. 93-579) requires that you be given certain information in connection with your submission of the attached form related to a patent application or patent. Accordingly, pursuant to the requirements of the Act, please be advised that: (1) the general authority for the collection of this information is 35 U.S.C. 2(b)(2); (2) furnishing of the information solicited is voluntary; and (3) the principal purpose for which the information is used by the U.S. Patent and Trademark Office is to process and/or examine your submission related to a patent application or patent. If you do not furnish the requested information, the U.S. Patent and Trademark Office may not be able to process and/or examine your submission, which may result in termination of proceedings or abandonment of the application or expiration of the patent.

The information provided by you in this form will be subject to the following routine uses:

1. The information on this form will be treated confidentially to the extent allowed under the Freedom of Information Act (5 U.S.C. 552) and the Privacy Act (5 U.S.C. 552a). Records from this system of records may be disclosed to the Department of Justice to determine whether the Freedom of Information Act requires disclosure of these record s.

2. A record from this system of records may be disclosed, as a routine use, in the course of presenting evidence to a court, magistrate, or administrative tribunal, including disclosures to opposing counsel in the course of settlement negotiations.

3. A record in this system of records may be disclosed, as a routine use, to a Member of Congress submitting a request involving an individual, to whom the record pertains, when the individual has requested assistance from the Member with respect to the subject matter of the record.

4. A record in this system of records may be disclosed, as a routine use, to a contractor of the Agency having need for the information in order to perform a contract. Recipients of information shall be required to comply with the requirements of the Privacy Act of 1974, as amended, pursuant to 5 U.S.C. 552a(m).

5. A record related to an International Application filed under the Patent Cooperation Treaty in this system of records may be disclosed, as a routine use, to the International Bureau of the World Intellectual Property Organization, pursuant to the Patent Cooperation Treaty.

6. A record in this system of records may be disclosed, as a routine use, to another federal agency for purposes of National Security review (35 U.S.C. 181) and for review pursuant to the Atomic Energy Act (42 U.S.C. 218(c)).

7. A record from this system of records may be disclosed, as a routine use, to the Administrator, General Services, or his/her designee, during an inspection of records conducted by GSA as part of that agency's responsibility to recommend improvements in records management practices and programs, under authority of 44 U.S.C. 2904 and 2906. Such disclosure shall be made in accordance with the GSA regulations governing inspection of records for this purpose, and any other relevant (i.e., GSA or Commerce) directive. Such disclosure shall not be used to make determinations about individuals.

8. A record from this system of records may be disclosed, as a routine use, to the public after either publication of the application pursuant to 35 U.S.C. 122(b) or issuance of a patent pursuant to 35 U.S.C. 151. Further, a record may be disclosed, subject to the limitations of 37 CFR 1.14, as a routine use, to the public if the record was filed in an application which became abandoned or in which the proceedings were terminated and which application is referenced by either a published application, an application open to public inspections or an issued patent.

9. A record from this system of records may be disclosed, as a routine use, to a Federal, State, or local law enforcement agency, if the USPTO becomes aware of a violation or potential violation of law or regulation.

Doc code: IDS
Doc description: Information Disclosure Statement (IDS) Filed

PTO/SB/08a (01-22)
Approved for use through 05/31/2024. OMB 0651-0031
U.S. Patent and Trademark Office; U.S. DEPARTMENT OF COMMERCE
Under the Paperwork Reduction Act of 1995, no persons are required to respond to a collection of information unless it contains a valid OMB control number.

INFORMATION DISCLOSURE STATEMENT BY APPLICANT (**Not for submission under 37 CFR 1.99)**	Application Number	18618609
	Filing Date	2024-03-27
	First Named Inventor	Jae Woong Kim
	Art Unit	1729
	Examiner Name	A. E. Eggerding
	Attorney Docket Number	LGES 3.3F-1654 CON CON

U.S.PATENTS Remove

Examiner Initial*	Cite No	Patent Number	Kind Code[1]	Issue Date	Name of Patentee or Applicant of cited Document	Pages,Columns,Lines where Relevant Passages or Relevant Figures Appear
	1					

If you wish to add additional U.S. Patent citation information please click the Add button. Add

U.S.PATENT APPLICATION PUBLICATIONS Remove

Examiner Initial*	Cite No	Publication Number	Kind Code[1]	Publication Date	Name of Patentee or Applicant of cited Document	Pages,Columns,Lines where Relevant Passages or Relevant Figures Appear
	1	20050142436	A1	2005-06-30	Arai et al.	
	2	20050277022	A1	2005-12-15	Kozuki, Kiyomi	

If you wish to add additional U.S. Published Application citation information please click the Add button. Add

FOREIGN PATENT DOCUMENTS Remove

Examiner Initial*	Cite No	Foreign Document Number[3]	Country Code[2] ¡	Kind Code[4]	Publication Date	Name of Patentee or Applicant of cited Document	Pages,Columns,Lines where Relevant Passages or Relevant Figures Appear	T[5]
	1	101714624	CN	A	2010-05-26	Guangzhou Fullriver Battery New Technology Co., Lt	Machine generated translation attached.	☒
	2	2000-077078	JP	A	2000-03-14	Matsushita Electric Ind Co Ltd	Machine generated translation attached.	☒

INFORMATION DISCLOSURE STATEMENT BY APPLICANT (Not for submission under 37 CFR 1.99)		
	Application Number	18618609
	Filing Date	2024-03-27
	First Named Inventor	Jae Woong Kim
	Art Unit	1729
	Examiner Name	A. E. Eggerding
	Attorney Docket Number	LGES 3.3F-1654 CON CON

	3	2000-228182	JP	A	2000-08-15	Toyota Central Res & Dev	Machine generated translation attached.	☒
	4	2006-324049	JP	A	2006-11-30	Sony Corp	Machine generated translation attached.	☒
	5	5117133	JP	B2	2013-01-09	Hitachi Vehicle Energy Ltd	Machine generated translation attached.	☒
	6	6045286	JP	B2	2016-12-14	Hitachi Vehicle Energy Ltd	Machine generated translation attached.	☒
	7	2016-0009406	KR	A	2016-01-26	Lg Chemical Ltd	Machine generated translation attached.	☒

If you wish to add additional Foreign Patent Document citation information please click the Add button Add

NON-PATENT LITERATURE DOCUMENTS Remove

Examiner Initials*	Cite No	Include name of the author (in CAPITAL LETTERS), title of the article (when appropriate), title of the item (book, magazine, journal, serial, symposium, catalog, etc), date, pages(s), volume-issue number(s), publisher, city and/or country where published.	T[5]
	1	Extended European Seach Report including Written Opinion for Application No. 24187569.9 dated 10/11/24. 9 pages.	☐
	2	Extended European Seach Report including Written Opinion for Application No. 24187669.7 dated 10/18/24. 9 pages.	☐

If you wish to add additional non-patent literature document citation information please click the Add button Add

EXAMINER SIGNATURE

Examiner Signature		Date Considered	

*EXAMINER: Initial if reference considered, whether or not citation is in conformance with MPEP 609. Draw line through a citation if not in conformance and not considered. Include copy of this form with next communication to applicant.

INFORMATION DISCLOSURE STATEMENT BY APPLICANT (Not for submission under 37 CFR 1.99)		
	Application Number	18618609
	Filing Date	2024-03-27
	First Named Inventor	Jae Woong Kim
	Art Unit	1729
	Examiner Name	A. E. Eggerding
	Attorney Docket Number	LGES 3.3F-1654 CON CON

[1] See Kind Codes of USPTO Patent Documents at www.USPTO.GOV or MPEP 901.04. [2] Enter office that issued the document, by the two-letter code (WIPO Standard ST.3). [3] For Japanese patent documents, the indication of the year of the reign of the Emperor must precede the serial number of the patent document. [4] Kind of document by the appropriate symbols as indicated on the document under WIPO Standard ST.16 if possible. [5] Applicant is to place a check mark here if English language translation is attached.

Other Prior Art

According to the information contained in form PTO-1449 or PTO-892, there are one or more other prior art/non-patent literature documents missing from the original file history record obtained from the United States Patent and Trademark Office. Upon your request we will attempt to obtain these documents from alternative resources. Please note that additional charges will apply for this service.

This page is not part of the official USPTO record. It has been determined that content identified on this document is missing from the original file history record.

I hereby certify that this paper (along with any paper referred to as being attached or enclosed) is being transmitted via the Office electronic filing system in accordance with 37 C.F.R. § 1.6(a)(4).

Dated: November 14, 2024
Electronic Signature for Joseph H. Karlin: /Joseph H. Karlin/

Docket No. LGES 3.3F-1654 CON CON
(PATENT)

IN THE UNITED STATES PATENT AND TRADEMARK OFFICE

In re Patent Application of:
Kim et al.

Application No.: 18/618,609

Confirmation No.: 3847

Filed: March 27, 2024

Art Unit: 1729

For: Secondary Battery And Method For Manufacturing The Same

Examiner: A. E. Eggerding

Commissioner for Patents
P.O. Box 1450
Alexandria, VA 22313-1450

INFORMATION DISCLOSURE STATEMENT

Dear Commissioner:

It is respectfully requested that the reference(s) listed on the enclosed form be made of record and considered with respect to the above-referenced U.S. patent application. A copy of each reference which is not a U.S. patent or patent application is enclosed. Submission of the present Information Disclosure Statement should not be taken as an admission that the cited reference(s) is/are legally available prior art or that the same is/are pertinent or material or even analogous art to the claimed invention.

The required fees are being paid via credit card. However, please charge any additional fees not already paid via credit card, and credit any overpayments to our Deposit Account No. 12-1095.

Dated: November 14, 2024

Respectfully submitted,

Electronic signature: /Joseph H. Karlin/
Joseph H. Karlin
Registration No.: 62,471
LERNER DAVID LLP
20 Commerce Dr.
Cranford, New Jersey 07016
(908) 654-5000
Attorney for Applicant(s)

LD-462

8286445

UNITED STATES
PATENT AND TRADEMARK OFFICE

P.O. Box 1450
Alexandria, VA 22313 - 1450
www.uspto.gov

ELECTRONIC PAYMENT RECEIPT

APPLICATION #	RECEIPT DATE / TIME	ATTORNEY DOCKET #
18/618,609	**11/14/2024 03:34:37 PM Z ET**	**LGES 3.3F-1654 CON CON**

Title of Invention

Secondary Battery And Method For Manufacturing The Same

Application Information

APPLICATION TYPE	Utility - Nonprovisional Application under 35 USC 111(a)	PATENT #	-
CONFIRMATION #	3847	FILED BY	Liz Semon
PATENT CENTER #	67969405	AUTHORIZED BY	Kevin Kocun
CUSTOMER #	86765	FILING DATE	03/27/2024
CORRESPONDENCE ADDRESS	-	FIRST NAMED INVENTOR	Jae Woong Kim

Payment Information

PAYMENT METHOD	PAYMENT TRANSACTION ID	PAYMENT AUTHORIZED BY
CARD / 1060	**E2024ADF35346035**	**Liz Semon**

FEE CODE	DESCRIPTION	ITEM PRICE($)	QUANTITY	ITEM TOTAL($)
1806	SUBMISSION OF AN INFORMATION DISCLOSURE STATEMENT	260.00	1	260.00
			TOTAL AMOUNT:	**$260.00**

This Acknowledgement Receipt evidences receipt on the noted date by the USPTO of the indicated documents, characterized by the applicant, and including page counts, where applicable. It serves as evidence of receipt similar to a Post Card, as described in MPEP 503.

New Applications Under 35 U.S.C. 111

If a new application is being filed and the application includes the necessary components for filing date (see 37 CFR 1.53(b)-(d) and MPEP 506), a Filing Receipt (37 CFR 1.54) will be issued in due course and the date shown on this Acknowledgement Receipt will establish the filing date of the application

National Stage of an International Application under 35 U.S.C. 371

If a timely submission to enter the national stage of an international application is compliant with the conditions of 35 U.S.C.

371 and other applicable requirements a Form PCT/DO/EO/903 indicating acceptance of the application as a national stage submission under 35 U.S.C. 371 will be issued in addition to the Filing Receipt, in due course.

New International Application Filed with the USPTO as a Receiving Office

If a new international application is being filed and the international application includes the necessary components for an international filing date (see PCT Article 11 and MPEP 1810), a Notification of the International Application Number and of the International Filing Date (Form PCT/RO/105) will be issued in due course, subject to prescriptions concerning national security, and the date shown on this Acknowledgement Receipt will establish the international filing date of the application.

UNITED STATES
PATENT AND TRADEMARK OFFICE

P.O. Box 1450
Alexandria, VA 22313 - 1450
www.uspto.gov

ELECTRONIC ACKNOWLEDGEMENT RECEIPT

APPLICATION #	RECEIPT DATE / TIME	ATTORNEY DOCKET #
18/618,609	**01/13/2025 04:20:50 PM Z ET**	**LGES 3.3F-1654 CON CON**

Title of Invention

Secondary Battery And Method For Manufacturing The Same

Application Information

APPLICATION TYPE	Utility - Nonprovisional Application under 35 USC 111(a)	PATENT #	-
CONFIRMATION #	3847	FILED BY	Sharon McGee
PATENT CENTER #	68715321	FILING DATE	03/27/2024
CUSTOMER #	86765	FIRST NAMED INVENTOR	Jae Woong Kim
CORRESPONDENCE ADDRESS	-	AUTHORIZED BY	Kevin Kocun

Documents

TOTAL DOCUMENTS: 2

DOCUMENT	PAGES	DESCRIPTION	SIZE (KB)
Amendment LGES 33F-1654 CC.pdf	6	Applicant Arguments/Remarks Made in an Amendment	32 KB
LGES5172 - Transmittal -- Amendment.pdf	1	Miscellaneous Incoming Letter	21 KB

Digest

DOCUMENT	MESSAGE DIGEST(SHA-512)
Amendment LGES 33F-1654 CC.pdf	1F3BDF05516C5DD61E05911E9FD8BF0126D184A9A798419AC5889F905E1B013E9A12CAF5426C819828173DB360A341C89CE2BD7A507DD49057D100FD0902D6DD
LGES5172 - Transmittal --	67099A57FDBDCB8AD0278EDBBF3B2B2A3256D073E3A30C34

Amendment.pdf

3FB75AA9D2F51836858F5DBF945EF82FEC2488F9F54BA9241
A5C49393FC4CCAF8DD068F11EC11DF7

This Acknowledgement Receipt evidences receipt on the noted date by the USPTO of the indicated documents, characterized by the applicant, and including page counts, where applicable. It serves as evidence of receipt similar to a Post Card, as described in MPEP 503.

New Applications Under 35 U.S.C. 111

If a new application is being filed and the application includes the necessary components for filing date (see 37 CFR 1.53(b)-(d) and MPEP 506), a Filing Receipt (37 CFR 1.54) will be issued in due course and the date shown on this Acknowledgement Receipt will establish the filing date of the application

National Stage of an International Application under 35 U.S.C. 371

If a timely submission to enter the national stage of an international application is compliant with the conditions of 35 U.S.C. 371 and other applicable requirements a Form PCT/DO/EO/903 indicating acceptance of the application as a national stage submission under 35 U.S.C. 371 will be issued in addition to the Filing Receipt, in due course.

New International Application Filed with the USPTO as a Receiving Office

If a new international application is being filed and the international application includes the necessary components for an international filing date (see PCT Article 11 and MPEP 1810), a Notification of the International Application Number and of the International Filing Date (Form PCT/RO/105) will be issued in due course, subject to prescriptions concerning national security, and the date shown on this Acknowledgement Receipt will establish the international filing date of the application.

I hereby certify that this paper (along with any paper referred to as being attached or enclosed) is being transmitted via the Office electronic filing system in accordance with 37 C.F.R. § 1.6(a)(4).

Dated: __January 13, 2025_____
Electronic Signature for Joseph H. Karlin: /Joseph H. Karlin/

Docket No. LGES 3.3F-1654 CON CON
(PATENT)

IN THE UNITED STATES PATENT AND TRADEMARK OFFICE

In re Patent Application of:
Kim et al.

Application No.: 18/618,609

Confirmation No.: 3847

Filed: March 27, 2024

Art Unit: 1729

For: Secondary Battery And Method For Manufacturing The Same

Examiner: A. E. Eggerding

Commissioner for Patents
P.O. Box 1450
Alexandria, VA 22313-1450

AMENDMENT

Dear Commissioner:

In response to the official action mailed October 16, 2024, applicant submits the following amendments and remarks.

IN THE CLAIMS

1. (Original) A secondary battery comprising:

a can member; and

an electrode assembly having a positive electrode, a negative electrode and a separator disposed therebetween, which are wounded together in a wound state in a jelly-roll shape,

wherein the positive electrode or the negative electrode comprises:

an electrode collector;

a coating portion coated with an active material on the electrode collector; and

a non-coating portion on which the active material is not applied to the electrode collector, the non-coating portion being adjacent to the coating portion in a width direction perpendicular to a longitudinal direction of the electrode collector, the non-coating portion having a plurality of notching tabs formed therein such that each of the plurality of notching tabs extends away from the coating portion in the width direction,

wherein, when the electrode assembly is in the wound state, the plurality of notching tabs are circumferentially distributed about a central axis of the electrode assembly,

wherein the plurality of notching tabs are bent in a radial direction towards the central axis so as to form an overlapping region in which the plurality of notching tabs overlap one another in the width direction of the electrode collector, and

wherein at least some of the plurality of notching tabs are directly bonded to others of the plurality of notching tabs at the overlapping region so as to define an electrical connection between the plurality of notching tabs and the can member.

2. (Original) The secondary battery of claim 1, wherein the overlapping region is positioned along the central axis of the electrode assembly.

3. (Original) The secondary battery of claim 1, wherein the plurality of notching tabs is formed on a radially outer portion of an end of the electrode assembly, the radially outer portion being remote from the central axis.

4. (Original) The secondary battery of claim 1, wherein the plurality of notching tabs are bonded to the can member by welding.

5. (Original) The secondary battery of claim 1, further comprising an insulation member disposed between bent parts of the plurality of notching tabs and an end of the electrode assembly.

6. (Original) The secondary battery of claim 5, wherein the overlapping region is disposed on the insulation member.

7. (Original) The secondary battery of claim 1, wherein the plurality of notching tabs are equally circumferentially distributed about the central axis of the electrode assembly.

8. (Original) The secondary battery of claim 1, further comprising an electrode tab attached to a non-coated portion at one end of the electrode collector in the longitudinal direction, wherein bent parts of the plurality of notching tabs overlap the electrode tab, and the bent parts of the plurality of notching tabs and the electrode tab are electrically connected to the can member by welding.

9. (Original) The secondary battery of claim 1, wherein the bent parts of the plurality of notching tabs overlap an electrode tab coupled to the electrode assembly and extending from a central portion of an end of the electrode assembly, the central portion being positioned along the central axis.

10. (Original) The secondary battery of claim 1, wherein the notching tab part continuously extends across 1/3 or more of a total length of the coating portion in the longitudinal direction.

11. (Original) The secondary battery of claim 1, wherein each of the plurality of notching tabs has a width of 4 mm to 5 mm.

12. (Original) The secondary battery of claim 1, wherein each of the plurality of notching tabs overlaps with at least another one of the plurality of notching tabs in the wound state so as to

define a respective plurality of layer portions, each of the layer portions extending only over a same circumferentially extending angle about the central axis of the electrode assembly.

13. (Original) The secondary battery of claim 1, wherein the plurality of notching tabs are circumferentially distributed at at least ten locations about the central axis of the electrode assembly.

14. (Original) The secondary battery of claim 1, wherein the plurality of notching tabs includes at least twenty notching tabs.

15. (New) The secondary battery of claim 1, wherein the plurality of notching tabs are bonded to an end portion of the can member by welding, the end portion being perpendicular to the central axis of the electrode assembly.

REMARKS

The present remarks are being filed in response to the non-final office action dated October 16, 2024. After entry of the foregoing amendments, claims 1-15 will be pending. Claims 1-14 are unamended. Claim 15 is new. Applicant respectfully requests that the Examiner reconsider the claims in view of the remarks herein.

Claim Rejections

Claims 1-14 were rejected on the ground of nonstatutory double patenting as allegedly being unpatentable over claims 1-11 of U.S. Patent No. 11,973,177 ('177 Patent). To overcome these rejections, a terminal disclaimer is submitted herewith with respect to the '177 Patent. Accordingly, Applicant respectfully requests that the nonstatutory obviousness-type double patenting rejection with respect to the '177 Patent be withdrawn.

New Claim 15

New dependent claim 15 is added to recite that "the plurality of notching tabs are bonded to an end portion of the can member by welding, the end portion being perpendicular to the central axis of the electrode assembly." This new claim can find support throughout the specification, and at least in as-published paragraph [0029], [0037], [0074], and figures 4 and 5. It is believed that new claim 15 is novel and nonobvious over each of the references of record, alone or in combination, for at least the reasons that claim 1 was allowed.

Conclusion

As it is believed that all of the rejections set forth in the Official Action have been fully met, favorable reconsideration and allowance are earnestly solicited. If, however, for any reason the Examiner does not believe that such action can be taken at this time, it is respectfully requested that the Examiner telephone applicant's attorney at (908) 654-5000 in order to overcome any additional objections which the Examiner might have.

All required fees are being paid via credit card. However, please charge any additional fees not already paid via credit card, and credit any overpayments to our Deposit Account No. 12-1095.

Dated: January 13, 2025

Respectfully submitted,

Electronic signature: /Joseph H. Karlin/
Joseph H. Karlin
Registration No.: 62,471
LERNER DAVID LLP
20 Commerce Dr.
Cranford, New Jersey 07016
(908) 654-5000
Attorney for Applicant

AMENDMENT TRANSMITTAL LETTER			Docket No. LGES 3.3F-1654 CON CON
Application No. 18/618,609-Conf. #3847	Filing Date March 27, 2024	Examiner A. E. Eggerding	Art Unit 1729

Applicant(s): LG Energy Solution, Ltd.

Invention: Secondary Battery And Method For Manufacturing The Same

TO THE COMMISSIONER FOR PATENTS

Transmitted herewith is an amendment in the above-identified application.

The fee has been calculated and is transmitted as shown below.

CLAIMS AS AMENDED					
	Claims Remaining After Amendment	**Highest Number Previously Paid**	**Number Extra Claims Present**	**Rate**	
Total Claims	15	- 20 =	0	x	
Independent Claims	1	- 3 =	0	x	
Multiple Dependent Claims (check if applicable) ☐					
Other fee (please specify):					
TOTAL ADDITIONAL FEE FOR THIS AMENDMENT:					0.00

[x] Large Entity ☐ Small Entity

[x] No additional fee is required for this amendment.

☐ Please charge Deposit Account No. _____ in the amount of $ _____ .

☐ A check in the amount of $ _____ to cover the filing fee is enclosed.

☐ Payment by credit card. Form PTO-2038 is attached.

[x] The Director is hereby authorized to charge and credit Deposit Account No. 12-1095 as described below. A duplicate copy of this sheet is enclosed.

- [x] Credit any overpayment.
- [x] Charge any additional filing or application processing fees required under 37 C.F.R. § 1.16 and 1.17.

/Joseph H. Karlin/ Dated: January 13, 2025

Joseph H. Karlin (Atty/Agent Reg. No.: 62,471)
LERNER DAVID LLP
20 Commerce Dr.
Cranford, New Jersey 07016
(908) 654-5000

I hereby certify that this paper (along with any paper referred to as being attached or enclosed) is being transmitted via the Office electronic filing system in accordance with 37 C.F.R. § 1.6(a)(4).

Dated: January 13, 2025 Electronic Signature for Joseph H. Karlin: /Joseph H. Karlin/

UNITED STATES
PATENT AND TRADEMARK OFFICE

P.O. Box 1450
Alexandria, VA 22313 - 1450
www.uspto.gov

ELECTRONIC ACKNOWLEDGEMENT RECEIPT

APPLICATION #	RECEIPT DATE / TIME	ATTORNEY DOCKET #
18/618,609	**01/13/2025 04:19:32 PM Z ET**	**LGES 3.3F-1654 CON CON**

Title of Invention

Secondary Battery And Method For Manufacturing The Same

Application Information

APPLICATION TYPE	Utility - Nonprovisional Application under 35 USC 111(a)	PATENT #	-
CONFIRMATION #	3847	FILED BY	Joseph Karlin
PATENT CENTER #	68715221	FILING DATE	03/27/2024
CUSTOMER #	86765	FIRST NAMED INVENTOR	Jae Woong Kim
CORRESPONDENCE ADDRESS	-	AUTHORIZED BY	-

Documents

TOTAL DOCUMENTS: 2

DOCUMENT	PAGES	DESCRIPTION	SIZE (KB)
petition-request.pdf	3	Terminal Disclaimer-Filed (Electronic)	44 KB
grantLetter.pdf	1	Terminal Disclaimer-Electronic-Approved	18 KB

Digest

DOCUMENT	MESSAGE DIGEST(SHA-512)
petition-request.pdf	1B1C4F7E4E15C94621136692B3996B616155918A07A2D73E2FD5C68EBF40D7B61D9D296E07F56429C91BD8978791D5E35BB603D88B70528E3E256F8647E974BF
grantLetter.pdf	4C512446DEBDD55EC5714FFB146C0A230DCD5DB8C1786BA

BA4EFB29B28850CC7E8ABAB56C5DFBB701A17F22FAA96E1A
5A8E26CC049611D2703C8358EB22882F5

This Acknowledgement Receipt evidences receipt on the noted date by the USPTO of the indicated documents, characterized by the applicant, and including page counts, where applicable. It serves as evidence of receipt similar to a Post Card, as described in MPEP 503.

New Applications Under 35 U.S.C. 111

If a new application is being filed and the application includes the necessary components for filing date (see 37 CFR 1.53(b)-(d) and MPEP 506), a Filing Receipt (37 CFR 1.54) will be issued in due course and the date shown on this Acknowledgement Receipt will establish the filing date of the application

National Stage of an International Application under 35 U.S.C. 371

If a timely submission to enter the national stage of an international application is compliant with the conditions of 35 U.S.C. 371 and other applicable requirements a Form PCT/DO/EO/903 indicating acceptance of the application as a national stage submission under 35 U.S.C. 371 will be issued in addition to the Filing Receipt, in due course.

New International Application Filed with the USPTO as a Receiving Office

If a new international application is being filed and the international application includes the necessary components for an international filing date (see PCT Article 11 and MPEP 1810), a Notification of the International Application Number and of the International Filing Date (Form PCT/RO/105) will be issued in due course, subject to prescriptions concerning national security, and the date shown on this Acknowledgement Receipt will establish the international filing date of the application.

UNITED STATES
PATENT AND TRADEMARK OFFICE

P.O. Box 1450
Alexandria, VA 22313 - 1450
www.uspto.gov

TERMINAL DISCLAIMER TO OBVIATE A DOUBLE PATENTING REJECTION OVER A PRIOR PATENT

APPLICATION #	FILING DATE	FIRST NAMED INVENTOR	ATTORNEY DOCKET #
18618609	**03/27/2024**	**Jae Woong Kim**	**LGES 3.3F-1654 CON CON**

Title of Invention

Secondary Battery And Method For Manufacturing The Same

- ✓ Filing of terminal disclaimer does not obviate requirement for response under 37 CFR 1.111 to outstanding Office Action
- ✓ This electronic Terminal Disclaimer is not being used for a Joint Research Agreement.

Owner	Percent interest
LG Energy Solution, Ltd.	100%
Total	**100%**

The owner(s) of percent interest listed above in the instant application hereby disclaims, except as provided below, the terminal part of the statutory term of any patent granted on the instant application which would extend beyond the expiration date of the full statutory term of any patent granted on pending reference Application Number(s)

Application #	Filing Date

as the term of any patent granted on said reference application may be shortened by any terminal disclaimer filed prior to the grant of any patent on the pending reference application. The owner hereby agrees that any patent so granted on the instant application shall be enforceable only for and during such period that it and any patent granted on the reference application are commonly owned. This agreement runs with any patent granted on the instant application and is binding upon the grantee, its successors or assigns.
In making the above disclaimer, the owner does not disclaim the terminal part of any patent granted on the instant application that would extend to the expiration date of the full statutory term of any patent granted on said reference application, "as the term of any patent granted on said reference application may be shortened by any terminal disclaimer filed prior to the grant of any patent on the pending reference application," in the event that any such patent granted on the pending reference application: expires for failure to pay a maintenance fee, is held unenforceable, is found invalid by a court of competent jurisdiction, is statutorily disclaimed in whole or terminally disclaimed under 37 CFR 1.321, has all claims canceled by a reexamination certificate, is reissued, or is in any manner terminated prior to the expiration of its full statutory term as shortened by any terminal disclaimer filed prior to its grant.

The owner(s) of percent interest listed above in the instant application hereby disclaims, except as provided below, the terminal part of the statutory term of any patent granted on the instant application which would extend beyond the expiration date of the full statutory term of prior patent number(s)

Patent #
11973177

as the term of said prior patent is presently shortened by any terminal disclaimer. The owner hereby agrees that any patent so granted on the instant application shall be enforceable only for and during such period that it and the prior patent are commonly owned. This agreement runs with any patent granted on the instant application and is binding upon the grantee, its successors or assigns.
In making the above disclaimer, the owner does not disclaim the terminal part of the term of any patent granted on the instant application that would extend to the expiration date of the full statutory term of the prior patent, "as the term of said prior patent is presently shortened by any terminal disclaimer," in the event that said prior patent later:
• expires for failure to pay a maintenance fee;
• is held unenforceable;
• is found invalid by a court of competent jurisdiction;
• is statutorily disclaimed in whole or terminally disclaimed under 37 CFR 1.321;
• has all claims canceled by a reexamination certificate;
• is reissued; or
• is in any manner terminated prior to the expiration of its full statutory term as presently shortened by any terminal disclaimer.

Terminal disclaimer fee under 37 CFR 1.20(d) included with Electronic Terminal Disclaimer request.

Applicant claims the following entity status:
Regular Undiscounted

I hereby declare that all statements made herein of my own knowledge are true and that all statemnts made on information and belief are believed to be true; and further that these statements were made with the knowledge that willful false statements and the like so made are punishable by fine or imprisonment, or both, under Section 1001 of Title 18 of the United States Code and that such willful false statements may jeopardize the validity of the application or any patent issued thereon.

I certify, in accordance with 37 CFR 1.4(d)(4) that I am: An attorney or agent registered to practice before the Patent and Trademark Office who is of record in this application

Signature	Name	Registration #
/Joseph H. Karlin/	Joseph Karlin	62471

* Statement under 37 CFR 3.73(b) is required if terminal disclaimer is signed by the assignee (owner). Form PTO/SB/96 may be used for making this certification. See MPEP 324.

UNITED STATES
PATENT AND TRADEMARK OFFICE

P.O. Box 1450
Alexandria, VA 22313 - 1450
www.uspto.gov

ELECTRONIC PAYMENT RECEIPT

APPLICATION #	RECEIPT DATE / TIME	ATTORNEY DOCKET #
18/618,609	**01/13/2025 04:19:32 PM Z ET**	**LGES 3.3F-1654 CON CON**

Title of Invention

Secondary Battery And Method For Manufacturing The Same

Application Information

APPLICATION TYPE	Utility - Nonprovisional Application under 35 USC 111(a)	PATENT #	-
CONFIRMATION #	3847	FILED BY	Joseph Karlin
PATENT CENTER #	68715221	AUTHORIZED BY	-
CUSTOMER #	86765	FILING DATE	03/27/2024
CORRESPONDENCE ADDRESS	-	FIRST NAMED INVENTOR	Jae Woong Kim

Payment Information

PAYMENT METHOD	PAYMENT TRANSACTION ID	PAYMENT AUTHORIZED BY
CARD / 1060	**E20251CG20266829**	**Joseph Karlin**

FEE CODE	DESCRIPTION	ITEM PRICE($)	QUANTITY	ITEM TOTAL($)
1814	STATUTORY DISCLAIMER, INCLUDING TERMINAL DISCLAIMER	170.00	1	170.00
			TOTAL AMOUNT:	**$170.00**

This Acknowledgement Receipt evidences receipt on the noted date by the USPTO of the indicated documents, characterized by the applicant, and including page counts, where applicable. It serves as evidence of receipt similar to a Post Card, as described in MPEP 503.

New Applications Under 35 U.S.C. 111

If a new application is being filed and the application includes the necessary components for filing date (see 37 CFR 1.53(b)-(d) and MPEP 506), a Filing Receipt (37 CFR 1.54) will be issued in due course and the date shown on this Acknowledgement Receipt will establish the filing date of the application

National Stage of an International Application under 35 U.S.C. 371

If a timely submission to enter the national stage of an international application is compliant with the conditions of 35 U.S.C.

371 and other applicable requirements a Form PCT/DO/EO/903 indicating acceptance of the application as a national stage submission under 35 U.S.C. 371 will be issued in addition to the Filing Receipt, in due course.

New International Application Filed with the USPTO as a Receiving Office

If a new international application is being filed and the international application includes the necessary components for an international filing date (see PCT Article 11 and MPEP 1810), a Notification of the International Application Number and of the International Filing Date (Form PCT/RO/105) will be issued in due course, subject to prescriptions concerning national security, and the date shown on this Acknowledgement Receipt will establish the international filing date of the application.

Doc code : DISQ.E.FILE
Description : Electronic Terminal Disclaimer - Approved

UNITED STATES
PATENT AND TRADEMARK OFFICE

Commissioner for Patents
United States Patent and Trademark Office
P.O. Box 1450
Alexandria, VA 22313 - 1450
www.uspto.gov

APPROVAL LETTER

APPLICATION #	FILING DATE	APPLICANT/PATENT UNDER REEXAMINATION
18/618,609	**03/27/2024**	**Jae Woong Kim**

Title of Invention

Secondary Battery And Method For Manufacturing The Same

Electronic terminal disclaimer filed on 01/13/2025

✓ Approved

This patent is subject to a Terminal Disclaimer

Approved / Disapproved by: Electronic Terminal Disclaimer automatically approved

Transaction History Date 2025-02-24
Date information retrieved from USPTO Patent Application Information Retrieval (PAIR) system records at www.uspto.gov

Notice of Allowability	Application No. 18/618,609	Applicant(s) Kim et al.	
	Examiner ALIX E EGGERDING	Art Unit RD00	AIA (FITF) Status Yes

-- The MAILING DATE of this communication appears on the cover sheet with the correspondence address--

All claims being allowable, PROSECUTION ON THE MERITS IS (OR REMAINS) CLOSED in this application. If not included herewith (or previously mailed), a Notice of Allowance (PTOL-85) or other appropriate communication will be mailed in due course. **THIS NOTICE OF ALLOWABILITY IS NOT A GRANT OF PATENT RIGHTS.** This application is subject to withdrawal from issue at the initiative of the Office or upon petition by the applicant. See 37 CFR 1.313 and MPEP 1308.

1. ☑ This communication is responsive to the terminal disclaimer filed 1/13/25.
   ☐ A declaration(s)/affidavit(s) under **37 CFR 1.130(b)** was/were filed on _____.

2. ☐ An election was made by the applicant in response to a restriction requirement set forth during the interview on _____; the restriction requirement and election have been incorporated into this action.

3. ☑ The allowed claim(s) is/are 1-15 . As a result of the allowed claim(s), you may be eligible to benefit from the **Patent Prosecution Highway** program at a participating intellectual property office for the corresponding application. For more information, please see **http://www.uspto.gov/patents/init_events/pph/index.jsp** or send an inquiry to **PPHfeedback@uspto.gov.**

4. ☑ Acknowledgment is made of a claim for foreign priority under 35 U.S.C. § 119(a)-(d) or (f).

   Certified copies:

   a) ☑ All b) ☐ Some* c) ☐ None of the:

   1. ☑ Certified copies of the priority documents have been received.
   2. ☐ Certified copies of the priority documents have been received in Application No. _____ .
   3. ☐ Copies of the certified copies of the priority documents have been received in this national stage application from the International Bureau (PCT Rule 17.2(a)).

   * Certified copies not received: _____ .

Applicant has THREE MONTHS FROM THE "MAILING DATE" of this communication to file a reply complying with the requirements noted below. Failure to timely comply will result in ABANDONMENT of this application.
THIS THREE-MONTH PERIOD IS NOT EXTENDABLE.

5. ☐ CORRECTED DRAWINGS (as "replacement sheets") must be submitted.
   ☐ including changes required by the attached Examiner's Amendment / Comment or in the Office action of Paper No./Mail Date _____ .

   Identifying indicia such as the application number (see 37 CFR 1.84(c)) should be written on the drawings in the front (not the back) of each sheet. Replacement sheet(s) should be labeled as such in the header according to 37 CFR 1.121(d).

6. ☐ DEPOSIT OF and/or INFORMATION about the deposit of BIOLOGICAL MATERIAL must be submitted. Note the attached Examiner's comment regarding REQUIREMENT FOR THE DEPOSIT OF BIOLOGICAL MATERIAL.

Attachment(s)

1. ☐ Notice of References Cited (PTO-892)
2. ☑ Information Disclosure Statements (PTO/SB/08), Paper No./Mail Date 11/14/24.
3. ☐ Examiner's Comment Regarding Requirement for Deposit of Biological Material _____.
4. ☐ Interview Summary (PTO-413), Paper No./Mail Date. _____.
5. ☐ Examiner's Amendment/Comment
6. ☑ Examiner's Statement of Reasons for Allowance
7. ☐ Other _____.

/ALIX E EGGERDING/
Primary Examiner, RD00

DETAILED ACTION

Notice of Pre-AIA or AIA Status

1. The present application, filed on or after March 16, 2013, is being examined under the first inventor to file provisions of the AIA.

Allowable Subject Matter

2. Claims 1-15 are allowed.

3. The following is an examiner's statement of reasons for allowance: see Notice of Allowance for Application 16/498,751, mailed 1/9/2023.

Any comments considered necessary by applicant must be submitted no later than the payment of the issue fee and, to avoid processing delays, should preferably accompany the issue fee. Such submissions should be clearly labeled "Comments on Statement of Reasons for Allowance."

Conclusion

4. Any inquiry concerning this communication or earlier communications from the examiner should be directed to ALIX ECHELMEYER EGGERDING whose telephone number is (571)272-1101. The examiner can normally be reached 8:30am - 4:30pm.

Examiner interviews are available via telephone, in-person, and video conferencing using a USPTO supplied web-based collaboration tool. To schedule an interview, applicant is encouraged to use the USPTO Automated Interview Request (AIR) at http://www.uspto.gov/interviewpractice.

If attempts to reach the examiner by telephone are unsuccessful, the examiner's supervisor, Ula Ruddock can be reached on 571-272-1481. The fax phone number for the organization where this application or proceeding is assigned is 571-273-8300.

Information regarding the status of published or unpublished applications may be obtained from Patent Center. Unpublished application information in Patent Center is available to registered users. To file and manage patent submissions in Patent Center, visit: https://patentcenter.uspto.gov. Visit https://www.uspto.gov/patents/apply/patent-center for more information about Patent Center and https://www.uspto.gov/patents/docx for information about filing in DOCX format. For additional questions, contact the Electronic Business Center (EBC) at 866-217-9197 (toll-free). If you would like assistance from a USPTO Customer Service Representative, call 800-786-9199 (IN USA OR CANADA) or 571-272-1000.

/ALIX E EGGERDING/
Primary Examiner, RD00

INFORMATION DISCLOSURE STATEMENT BY APPLICANT (Not for submission under 37 CFR 1.99)		
	Application Number	18618609
	Filing Date	2024-03-27
	First Named Inventor	Jae Woong Kim
	Art Unit	1729
	Examiner Name	A. E. Eggerding
	Attorney Docket Number	LGES 3.3F-1654 CON CON

CERTIFICATION STATEMENT

Please see 37 CFR 1.97(e) to make the appropriate selection(s):

☐ That each item of information contained in the information disclosure statement was first cited in any communication from a foreign patent office in a counterpart foreign application not more than three months prior to the filing of the information disclosure statement. See 37 CFR 1.97(e)(1).

OR

☐ That no item of information contained in the information disclosure statement was cited in a communication from a foreign patent office in a counterpart foreign application, and, to the knowledge of the person signing the certification after making reasonable inquiry, no item of information contained in the information disclosure statement was known to any individual designated in 37 CFR 1.56(c) more than three months prior to the filing of the information disclosure statement. See 37 CFR 1.97(e)(2).

☐ See attached certification statement.

☒ A certification statement is not submitted herewith.

FEE

☒ The fee set forth in 37 CFR 1.17 (p) has been submitted herewith.

COPIES

☐ An identification of an earlier application pursuant to 37 CFR 1.98 (d) (1) is attached.

SIGNATURE

A signature of the applicant or representative is required in accordance with CFR 1.33, 10.18. Please see CFR 1.4(d) for the form of the signature.

Signature	/Joseph H. Karlin/	Date (YYYY-MM-DD)	2024-11-14
Name/Print	Joseph H. Karlin	Registration Number	62,471

This collection of information is required by 37 CFR 1.97 and 1.98. The information is required to obtain or retain a benefit by the public which is to file (and by the USPTO to process) an application. Confidentiality is governed by 35 U.S.C. 122 and 37 CFR 1.14. This collection is estimated to take 1 hour to complete, including gathering, preparing and submitting the completed application form to the USPTO. Time will vary depending upon the individual case. Any comments on the amount of time you require to complete this form and/or suggestions for reducing this burden, should be sent to the Chief Information Officer, U.S. Patent and Trademark Office, U.S. Department of Commerce, P.O. Box 1450, Alexandria, VA 22313-1450. DO NOT SEND FEES OR COMPLETED FORMS TO THIS ADDRESS. **SEND TO: Commissioner for Patents, P.O. Box 1450, Alexandria, VA 22313-1450.**

ALL REFERENCES CONSIDERED EXCEPT WHERE LINED THROUGH. /A.E.E/

Privacy Act Statement

The Privacy Act of 1974 (P.L. 93-579) requires that you be given certain information in connection with your submission of the attached form related to a patent application or patent. Accordingly, pursuant to the requirements of the Act, please be advised that: (1) the general authority for the collection of this information is 35 U.S.C. 2(b)(2); (2) furnishing of the information solicited is voluntary; and (3) the principal purpose for which the information is used by the U.S. Patent and Trademark Office is to process and/or examine your submission related to a patent application or patent. If you do not furnish the requested information, the U.S. Patent and Trademark Office may not be able to process and/or examine your submission, which may result in termination of proceedings or abandonment of the application or expiration of the patent.

The information provided by you in this form will be subject to the following routine uses:

1. The information on this form will be treated confidentially to the extent allowed under the Freedom of Information Act (5 U.S.C. 552) and the Privacy Act (5 U.S.C. 552a). Records from this system of records may be disclosed to the Department of Justice to determine whether the Freedom of Information Act requires disclosure of these record s.

2. A record from this system of records may be disclosed, as a routine use, in the course of presenting evidence to a court, magistrate, or administrative tribunal, including disclosures to opposing counsel in the course of settlement negotiations.

3. A record in this system of records may be disclosed, as a routine use, to a Member of Congress submitting a request involving an individual, to whom the record pertains, when the individual has requested assistance from the Member with respect to the subject matter of the record.

4. A record in this system of records may be disclosed, as a routine use, to a contractor of the Agency having need for the information in order to perform a contract. Recipients of information shall be required to comply with the requirements of the Privacy Act of 1974, as amended, pursuant to 5 U.S.C. 552a(m).

5. A record related to an International Application filed under the Patent Cooperation Treaty in this system of records may be disclosed, as a routine use, to the International Bureau of the World Intellectual Property Organization, pursuant to the Patent Cooperation Treaty.

6. A record in this system of records may be disclosed, as a routine use, to another federal agency for purposes of National Security review (35 U.S.C. 181) and for review pursuant to the Atomic Energy Act (42 U.S.C. 218(c)).

7. A record from this system of records may be disclosed, as a routine use, to the Administrator, General Services, or his/her designee, during an inspection of records conducted by GSA as part of that agency's responsibility to recommend improvements in records management practices and programs, under authority of 44 U.S.C. 2904 and 2906. Such disclosure shall be made in accordance with the GSA regulations governing inspection of records for this purpose, and any other relevant (i.e., GSA or Commerce) directive. Such disclosure shall not be used to make determinations about individuals.

8. A record from this system of records may be disclosed, as a routine use, to the public after either publication of the application pursuant to 35 U.S.C. 122(b) or issuance of a patent pursuant to 35 U.S.C. 151. Further, a record may be disclosed, subject to the limitations of 37 CFR 1.14, as a routine use, to the public if the record was filed in an application which became abandoned or in which the proceedings were terminated and which application is referenced by either a published application, an application open to public inspections or an issued patent.

9. A record from this system of records may be disclosed, as a routine use, to a Federal, State, or local law enforcement agency, if the USPTO becomes aware of a violation or potential violation of law or regulation.

ALL REFERENCES CONSIDERED EXCEPT WHERE LINED THROUGH. /A.E.E/

Doc code: IDS
Doc description: Information Disclosure Statement (IDS) Filed

PTO/SB/08a (01-22)
Approved for use through 05/31/2024. OMB 0651-0031
U.S. Patent and Trademark Office; U.S. DEPARTMENT OF COMMERCE
Under the Paperwork Reduction Act of 1995, no persons are required to respond to a collection of information unless it contains a valid OMB control number.

INFORMATION DISCLOSURE STATEMENT BY APPLICANT (Not for submission under 37 CFR 1.99)		
	Application Number	18618609
	Filing Date	2024-03-27
	First Named Inventor	Jae Woong Kim
	Art Unit	1729
	Examiner Name	A. E. Eggerding
	Attorney Docket Number	LGES 3.3F-1654 CON CON

U.S.PATENTS Remove

Examiner Initial*	Cite No	Patent Number	Kind Code[1]	Issue Date	Name of Patentee or Applicant of cited Document	Pages,Columns,Lines where Relevant Passages or Relevant Figures Appear
	1					

If you wish to add additional U.S. Patent citation information please click the Add button. Add

U.S.PATENT APPLICATION PUBLICATIONS Remove

Examiner Initial*	Cite No	Publication Number	Kind Code[1]	Publication Date	Name of Patentee or Applicant of cited Document	Pages,Columns,Lines where Relevant Passages or Relevant Figures Appear
	1	20050142436	A1	2005-06-30	Arai et al.	
	2	20050277022	A1	2005-12-15	Kozuki, Kiyomi	

If you wish to add additional U.S. Published Application citation information please click the Add button. Add

FOREIGN PATENT DOCUMENTS Remove

Examiner Initial*	Cite No	Foreign Document Number[3]	Country Code[2] ¡	Kind Code[4]	Publication Date	Name of Patentee or Applicant of cited Document	Pages,Columns,Lines where Relevant Passages or Relevant Figures Appear	T[5]
	1	101714624	CN	A	2010-05-26	Guangzhou Fullriver Battery New Technology Co., Lt	Machine generated translation attached.	☒
	2	2000-077078	JP	A	2000-03-14	Matsushita Electric Ind Co Ltd	Machine generated translation attached.	☒

PC 6.1.24

ALL REFERENCES CONSIDERED EXCEPT WHERE LINED THROUGH. /A.E.E/

INFORMATION DISCLOSURE STATEMENT BY APPLICANT (Not for submission under 37 CFR 1.99)		
	Application Number	18618609
	Filing Date	2024-03-27
	First Named Inventor	Jae Woong Kim
	Art Unit	1729
	Examiner Name	A. E. Eggerding
	Attorney Docket Number	LGES 3.3F-1654 CON CON

	3	2000-228182	JP	A	2000-08-15	Toyota Central Res & Dev	Machine generated translation attached.	☒
	4	2006-324049	JP	A	2006-11-30	Sony Corp	Machine generated translation attached.	☒
	5	5117133	JP	B2	2013-01-09	Hitachi Vehicle Energy Ltd	Machine generated translation attached.	☒
	6	6045286	JP	B2	2016-12-14	Hitachi Vehicle Energy Ltd	Machine generated translation attached.	☒
	7	2016-0009406	KR	A	2016-01-26	Lg Chemical Ltd	Machine generated translation attached.	☒

If you wish to add additional Foreign Patent Document citation information please click the Add button Add

NON-PATENT LITERATURE DOCUMENTS Remove

Examiner Initials*	Cite No	Include name of the author (in CAPITAL LETTERS), title of the article (when appropriate), title of the item (book, magazine, journal, serial, symposium, catalog, etc), date, pages(s), volume-issue number(s), publisher, city and/or country where published.	T[5]
	1	Extended European Seach Report including Written Opinion for Application No. 24187569.9 dated 10/11/24. 9 pages.	☐
	2	Extended European Seach Report including Written Opinion for Application No. 24187669.7 dated 10/18/24. 9 pages.	☐

If you wish to add additional non-patent literature document citation information please click the Add button Add

EXAMINER SIGNATURE

Examiner Signature	/ALIX E EGGERDING/	Date Considered	02/06/2025

*EXAMINER: Initial if reference considered, whether or not citation is in conformance with MPEP 609. Draw line through a citation if not in conformance and not considered. Include copy of this form with next communication to applicant.

ALL REFERENCES CONSIDERED EXCEPT WHERE LINED THROUGH. /A.E.E/

INFORMATION DISCLOSURE STATEMENT BY APPLICANT (Not for submission under 37 CFR 1.99)		
	Application Number	18618609
	Filing Date	2024-03-27
	First Named Inventor	Jae Woong Kim
	Art Unit	1729
	Examiner Name	A. E. Eggerding
	Attorney Docket Number	LGES 3.3F-1654 CON CON

[1] See Kind Codes of USPTO Patent Documents at www.USPTO.GOV or MPEP 901.04. [2] Enter office that issued the document, by the two-letter code (WIPO Standard ST.3). [3] For Japanese patent documents, the indication of the year of the reign of the Emperor must precede the serial number of the patent document. [4] Kind of document by the appropriate symbols as indicated on the document under WIPO Standard ST.16 if possible. [5] Applicant is to place a check mark here if English language translation is attached.

ALL REFERENCES CONSIDERED EXCEPT WHERE LINED THROUGH. /A.E.E/

UNITED STATES PATENT AND TRADEMARK OFFICE

UNITED STATES DEPARTMENT OF COMMERCE
United States Patent and Trademark Office
Address: COMMISSIONER FOR PATENTS
P.O. Box 1450
Alexandria, Virginia 22313-1450
www.uspto.gov

NOTICE OF ALLOWANCE AND FEE(S) DUE

86765 7590 02/24/2025
LG
Lerner David LLP
20 Commerce Drive
Cranford, NJ 07016

EXAMINER
EGGERDING, ALIX ECHELMEYER

ART UNIT	PAPER NUMBER
RD00	

DATE MAILED: 02/24/2025

APPLICATION NO.	FILING DATE	FIRST NAMED INVENTOR	ATTORNEY DOCKET NO.	CONFIRMATION NO.
18/618,609	03/27/2024	Jae Woong Kim	LGES 3.3F-1654 CON CON	3847

TITLE OF INVENTION: Secondary Battery And Method For Manufacturing The Same

APPLN. TYPE	ENTITY STATUS	ISSUE FEE DUE	PUBLICATION FEE DUE	PREV. PAID ISSUE FEE	TOTAL FEE(S) DUE	DATE DUE
nonprovisional	UNDISCOUNTED	$1290	$0.00	$0.00	$1290	05/27/2025

THE APPLICATION IDENTIFIED ABOVE HAS BEEN EXAMINED AND IS ALLOWED FOR ISSUANCE AS A PATENT. PROSECUTION ON THE MERITS IS CLOSED. THIS NOTICE OF ALLOWANCE IS NOT A GRANT OF PATENT RIGHTS. THIS APPLICATION IS SUBJECT TO WITHDRAWAL FROM ISSUE AT THE INITIATIVE OF THE OFFICE OR UPON PETITION BY THE APPLICANT. SEE 37 CFR 1.313 AND MPEP 1308.

THE ISSUE FEE AND PUBLICATION FEE (IF REQUIRED) MUST BE PAID WITHIN THREE MONTHS FROM THE MAILING DATE OF THIS NOTICE OR THIS APPLICATION SHALL BE REGARDED AS ABANDONED. THIS STATUTORY PERIOD CANNOT BE EXTENDED. SEE 35 U.S.C. 151. THE ISSUE FEE DUE INDICATED ABOVE DOES NOT REFLECT A CREDIT FOR ANY PREVIOUSLY PAID ISSUE FEE IN THIS APPLICATION. IF AN ISSUE FEE HAS PREVIOUSLY BEEN PAID IN THIS APPLICATION (AS SHOWN ABOVE), THE RETURN OF PART B OF THIS FORM WILL BE CONSIDERED A REQUEST TO REAPPLY THE PREVIOUSLY PAID ISSUE FEE TOWARD THE ISSUE FEE NOW DUE.

HOW TO REPLY TO THIS NOTICE:

I. Review the ENTITY STATUS shown above. If the ENTITY STATUS is shown as SMALL or MICRO, verify whether entitlement to that entity status still applies.

If the ENTITY STATUS is the same as shown above, pay the TOTAL FEE(S) DUE shown above.

If the ENTITY STATUS is changed from that shown above, on PART B - FEE(S) TRANSMITTAL, complete section number 5 titled "Change in Entity Status (from status indicated above)".

For purposes of this notice, small entity fees are 40% the amount of undiscounted fees, and micro entity fees are 20% the amount of undiscounted fees.

II. PART B - FEE(S) TRANSMITTAL, or its equivalent, must be completed and returned to the United States Patent and Trademark Office (USPTO) with your ISSUE FEE and PUBLICATION FEE (if required). If you are charging the fee(s) to your deposit account, section "4b" of Part B - Fee(s) Transmittal should be completed. If an equivalent of Part B is filed, a request to reapply a previously paid issue fee must be clearly made, and delays in processing may occur due to the difficulty in recognizing the paper as an equivalent of Part B.

III. All communications regarding this application must give the application number. Please direct all communications prior to issuance to Mail Stop ISSUE FEE unless advised to the contrary.

IMPORTANT REMINDER: Maintenance fees are due in utility patents issuing on applications filed on or after Dec. 12, 1980. It is patentee's responsibility to ensure timely payment of maintenance fees when due. More information is available at www.uspto.gov/PatentMaintenanceFees.

PART B - FEE(S) TRANSMITTAL

Complete and send this form, together with applicable fee(s), by mail or fax, or via the USPTO patent electronic filing system.

By mail, send to: Mail Stop ISSUE FEE
Commissioner for Patents
P.O. Box 1450
Alexandria, Virginia 22313-1450

By fax, send to: (571)-273-2885

INSTRUCTIONS: This form should be used for transmitting the ISSUE FEE and PUBLICATION FEE (if required). Blocks 1 through 5 should be completed where appropriate. All further correspondence will be mailed to the current correspondence address as indicated unless corrected below or directed otherwise in Block 1, by (a) specifying a new correspondence address; and/or (b) indicating a separate "FEE ADDRESS" for maintenance fee notifications. **Because electronic patent issuance may occur shortly after issue fee payment, any desired continuing application should preferably be filed prior to payment of this issue fee in order not to jeopardize copendency.**

CURRENT CORRESPONDENCE ADDRESS (Note: Use Block 1 for any change of address)

86765 7590 02/24/2025
LG
Lerner David LLP
20 Commerce Drive
Cranford, NJ 07016

Note: A certificate of mailing can only be used for domestic mailings of the Fee(s) Transmittal. This certificate cannot be used for any other accompanying papers. Each additional paper, such as an assignment or formal drawing, must have its own certificate of mailing or transmission.

Certificate of Mailing or Transmission

I hereby certify that this Fee(s) Transmittal is being deposited with the United States Postal Service with sufficient postage for first class mail in an envelope addressed to the Mail Stop ISSUE FEE address above, or being transmitted to the USPTO via the USPTO patent electronic filing system or by facsimile to (571) 273-2885, on the date below.

(Typed or printed name)
(Signature)
(Date)

APPLICATION NO.	FILING DATE	FIRST NAMED INVENTOR	ATTORNEY DOCKET NO.	CONFIRMATION NO.
18/618,609	03/27/2024	Jae Woong Kim	LGES 3.3F-1654 CON CON	3847

TITLE OF INVENTION: Secondary Battery And Method For Manufacturing The Same

APPLN. TYPE	ENTITY STATUS	ISSUE FEE DUE	PUBLICATION FEE DUE	PREV. PAID ISSUE FEE	TOTAL FEE(S) DUE	DATE DUE
nonprovisional	UNDISCOUNTED	$1290	$0.00	$0.00	$1290	05/27/2025

EXAMINER	ART UNIT	CLASS-SUBCLASS
EGGERDING, ALIX ECHELMEYER	RD00	429-094000

1. Change of correspondence address or indication of "Fee Address" (37 CFR 1.363).

❑ Change of correspondence address (or Change of Correspondence Address form PTO/AIA/122 or PTO/SB/122) attached.

❑ "Fee Address" indication (or "Fee Address" Indication form PTO/AIA/47 or PTO/SB/47; Rev 03-02 or more recent) attached. **Use of a Customer Number is required.**

2. For printing on the patent front page, list
(1) The names of up to 3 registered patent attorneys or agents OR, alternatively,
(2) The name of a single firm (having as a member a registered attorney or agent) and the names of up to 2 registered patent attorneys or agents. If no name is listed, no name will be printed.

1_____
2_____
3_____

3. ASSIGNEE NAME AND RESIDENCE DATA TO BE PRINTED ON THE PATENT (print or type)

PLEASE NOTE: Unless an assignee is identified below, no assignee data will appear on the patent. If an assignee is identified below, the document must have been previously recorded, or filed for recordation, as set forth in 37 CFR 3.11 and 37 CFR 3.81(a). Completion of this form is NOT a substitute for filing an assignment.

(A) NAME OF ASSIGNEE (B) RESIDENCE: (CITY and STATE OR COUNTRY)

Please check the appropriate assignee category or categories (will not be printed on the patent) : ❑ Individual ❑ Corporation or other private group entity ❑ Government

4a. Fees submitted: ❑Issue Fee ❑Publication Fee (if required)

4b. Method of Payment: *(Please first reapply any previously paid fee shown above)*

❑ Electronic Payment via the USPTO patent electronic filing system ❑ Enclosed check ❑ Non-electronic payment by credit card (Attach form PTO-2038)

❑ The Director is hereby authorized to charge the required fee(s), any deficiency, or credit any overpayment to Deposit Account No. _____

5. **Change in Entity Status** (from status indicated above)

❑ Applicant certifying micro entity status. See 37 CFR 1.29

NOTE: Absent a valid certification of Micro Entity Status (see forms PTO/SB/15A and 15B), issue fee payment in the micro entity amount will not be accepted at the risk of application abandonment.

❑ Applicant asserting small entity status. See 37 CFR 1.27

NOTE: If the application was previously under micro entity status, checking this box will be taken to be a notification of loss of entitlement to micro entity status.

❑ Applicant changing to regular undiscounted fee status.

NOTE: Checking this box will be taken to be a notification of loss of entitlement to small or micro entity status, as applicable.

NOTE: This form must be signed in accordance with 37 CFR 1.31 and 1.33. See 37 CFR 1.4 for signature requirements and certifications.

Authorized Signature _____ Date _____

Typed or printed name _____ Registration No. _____

UNITED STATES PATENT AND TRADEMARK OFFICE

UNITED STATES DEPARTMENT OF COMMERCE
United States Patent and Trademark Office
Address: COMMISSIONER FOR PATENTS
P.O. Box 1450
Alexandria, Virginia 22313-1450
www.uspto.gov

APPLICATION NO.	FILING DATE	FIRST NAMED INVENTOR	ATTORNEY DOCKET NO.	CONFIRMATION NO.
18/618,609	03/27/2024	Jae Woong Kim	LGES 3.3F-1654 CON CON	3847

86765 7590 02/24/2025
LG
Lerner David LLP
20 Commerce Drive
Cranford, NJ 07016

EXAMINER
EGGERDING, ALIX ECHELMEYER

ART UNIT	PAPER NUMBER
RD00	

DATE MAILED: 02/24/2025

Determination of Patent Term Adjustment under 35 U.S.C. 154 (b)
(Applications filed on or after May 29, 2000)

The Office has discontinued providing a Patent Term Adjustment (PTA) calculation with the Notice of Allowance.

Section 1(h)(2) of the AIA Technical Corrections Act amended 35 U.S.C. 154(b)(3)(B)(i) to eliminate the requirement that the Office provide a patent term adjustment determination with the notice of allowance. See Revisions to Patent Term Adjustment, 78 Fed. Reg. 19416, 19417 (Apr. 1, 2013). Therefore, the Office is no longer providing an initial patent term adjustment determination with the notice of allowance. The Office will continue to provide a patent term adjustment determination with the Issue Notification Letter that is mailed to applicant approximately three weeks prior to the issue date of the patent, and will include the patent term adjustment on the patent. Any request for reconsideration of the patent term adjustment determination (or reinstatement of patent term adjustment) should follow the process outlined in 37 CFR 1.705.

Any questions regarding the Patent Term Extension or Adjustment determination should be directed to the Office of Patent Legal Administration at (571)-272-7702. Questions relating to issue and publication fee payments should be directed to the Customer Service Center of the Office of Patent Publication at 1-(888)-786-0101 or (571)-272-4200.

PTOL-85 (Rev. 11/23)

OMB Clearance and PRA Burden Statement for PTOL-85 Part B

The Paperwork Reduction Act (PRA) of 1995 requires Federal agencies to obtain Office of Management and Budget approval before requesting most types of information from the public. When OMB approves an agency request to collect information from the public, OMB (i) provides a valid OMB Control Number and expiration date for the agency to display on the instrument that will be used to collect the information and (ii) requires the agency to inform the public about the OMB Control Number's legal significance in accordance with 5 CFR 1320.5(b).

The information collected by PTOL-85 Part B is required by 37 CFR 1.311. The information is required to obtain or retain a benefit by the public which is to file (and by the USPTO to process) an application. Confidentiality is governed by 35 U.S.C. 122 and 37 CFR 1.14. This collection is estimated to take 30 minutes to complete, including gathering, preparing, and submitting the completed application form to the USPTO. Time will vary depending upon the individual case. Any comments on the amount of time you require to complete this form and/or suggestions for reducing this burden, should be sent to the Chief Information Officer, U.S. Patent and Trademark Office, U.S. Department of Commerce, P.O. Box 1450, Alexandria, Virginia 22313-1450. DO NOT SEND FEES OR COMPLETED FORMS TO THIS ADDRESS. SEND TO: Commissioner for Patents, P.O. Box 1450, Alexandria, Virginia 22313-1450. Under the Paperwork Reduction Act of 1995, no persons are required to respond to a collection of information unless it displays a valid OMB control number.

Privacy Act Statement

The Privacy Act of 1974 (P.L. 93-579) requires that you be given certain information in connection with your submission of the attached form related to a patent application or patent. The United States Patent and Trademark Office (USPTO) collects the information in this record under authority of 35 U.S.C. 2. The USPTO's system of records is used to manage all applicant and owner information including name, citizenship, residence, post office address, and other information with respect to inventors and their legal representatives pertaining to the applicant's/ owner's activities in connection with the invention for which a patent is sought or has been granted. The applicable Privacy Act System of Records Notice for the information collected in this form is COMMERCE/PAT-TM-7 Patent Application Files, available in the Federal Register at 78 FR 19243 (March 29, 2013).
https://www.govinfo.gov/content/pkg/FR-2013-03-29/pdf/2013-07341.pdf

Routine uses of the information in this record may include disclosure to:

1) law enforcement, in the event that the system of records indicates a violation or potential violation of law;
2) a federal, state, local, or international agency, in response to its request;
3) a contractor of the USPTO having need for the information in order to perform a contract;
4) the Department of Justice for determination of whether the Freedom of Information Act (FOIA) requires disclosure of the record;
5) a Member of Congress submitting a request involving an individual to whom the record pertains, when the individual has requested the Member's assistance with respect to the subject matter of the record;
6) a court, magistrate, or administrative tribunal, in the course of presenting evidence, including disclosures to opposing counsel in the course of settlement negotiations;
7) the Administrator, General Services Administration (GSA), or their designee, during an inspection of records conducted by GSA under authority of 44 U.S.C. 2904 and 2906, in accordance with the GSA regulations and any other relevant (i.e., GSA or Commerce) directive, where such disclosure shall not be used to make determinations about individuals;
8) another federal agency for purposes of National Security review (35 U.S.C. 181) and for review pursuant to the Atomic Energy Act (42 U.S.C. 218(c));
9) the Office of Personnel Management (OPM) for personnel research purposes; and
10) the Office of Management and Budget (OMB) for legislative coordination and clearance.

If you do not furnish the information requested on this form, the USPTO may not be able to process and/or examine your submission, which may result in termination of proceedings, abandonment of the application, and/or expiration of the patent.

UNITED STATES
PATENT AND TRADEMARK OFFICE

P.O. Box 1450
Alexandria, VA 22313 - 1450
www.uspto.gov

ELECTRONIC ACKNOWLEDGEMENT RECEIPT

APPLICATION #	RECEIPT DATE / TIME	ATTORNEY DOCKET #
18/618,609	**05/22/2025 04:11:34 PM Z ET**	**LGES 3.3F-1654 CON CON**

Title of Invention

Secondary Battery And Method For Manufacturing The Same

Application Information

APPLICATION TYPE	Utility - Nonprovisional Application under 35 USC 111(a)	PATENT #	-
CONFIRMATION #	3847	FILED BY	Sharon McGee
PATENT CENTER #	70549018	FILING DATE	03/27/2024
CUSTOMER #	86765	FIRST NAMED INVENTOR	Jae Woong Kim
CORRESPONDENCE ADDRESS	-	AUTHORIZED BY	Kevin Kocun

Documents

TOTAL DOCUMENTS: 1

DOCUMENT	PAGES	DESCRIPTION	SIZE (KB)
LGES5172 - Fee Transmittal -- Part B PTOL-85.pdf	1	Issue Fee Payment (PTO-85B)	39 KB

Digest

DOCUMENT	MESSAGE DIGEST(SHA-512)
LGES5172 - Fee Transmittal -- Part B PTOL-85.pdf	BBD2C01A37EF018167C020D379C4B5C13DB982A5FD71EE215E8267DE301DD24B24B889922991ED14690A0C93734F61C982E01D65F493A3BFFA61E9963F4AFEEC

This Acknowledgement Receipt evidences receipt on the noted date by the USPTO of the indicated documents, characterized by the applicant, and including page counts, where applicable. It serves as evidence of receipt similar to a Post Card, as described in MPEP 503.

New Applications Under 35 U.S.C. 111

If a new application is being filed and the application includes the necessary components for filing date (see 37 CFR 1.53(b)-(d) and MPEP 506), a Filing Receipt (37 CFR 1.54) will be issued in due course and the date shown on this Acknowledgement Receipt will establish the filing date of the application

National Stage of an International Application under 35 U.S.C. 371

If a timely submission to enter the national stage of an international application is compliant with the conditions of 35 U.S.C. 371 and other applicable requirements a Form PCT/DO/EO/903 indicating acceptance of the application as a national stage submission under 35 U.S.C. 371 will be issued in addition to the Filing Receipt, in due course.

New International Application Filed with the USPTO as a Receiving Office

If a new international application is being filed and the international application includes the necessary components for an international filing date (see PCT Article 11 and MPEP 1810), a Notification of the International Application Number and of the International Filing Date (Form PCT/RO/105) will be issued in due course, subject to prescriptions concerning national security, and the date shown on this Acknowledgement Receipt will establish the international filing date of the application.

PART B–FEE(S) TRANSMITTAL

Complete and send this form, together with the applicable fee(s), by mail or fax, or via the USPTO patent electronic filing system.

By mail, send to: Mail Stop ISSUE FEE
Commissioner for Patents
P.O. Box 1450
Alexandria, VA 22313-1450

By fax, send to: (571) 273-2885

INSTRUCTIONS: This form should be used for transmitting the ISSUE FEE and PUBLICATION FEE (if required). Blocks 1 through 5 should be completed where appropriate. All further correspondence will be mailed to the current correspondence address as indicated unless corrected below or directed otherwise in Block 1, by (a) specifying a new correspondence address; and/or (b) indicating a separate "FEE ADDRESS" for maintenance fee notifications. **Because electronic patent issuance may occur shortly after issue fee payment, any desired continuing application should preferably be filed prior to payment of this issue fee in order not to jeopardize copendency.**

CURRENT CORRESPONDENCE ADDRESS (Note: Use Block 1 for any change of address)

LERNER DAVID LLP
20 Commerce Dr.
Cranford, New Jersey 07016

Note: A certificate of mailing can only be used for domestic mailings of the Fee(s) Transmittal. This certificate cannot be used for any other accompanying papers. Each additional paper, such as an assignment or formal drawing, must have its own certificate of mailing or transmission.

Certificate of Mailing or Transmission

I hereby certify that this Fee(s) Transmittal is being deposited with the United States Postal Service with sufficient postage for first class mail in an envelope addressed to the Mail Stop ISSUE FEE address above, or being transmitted to the USPTO via the USPTO patent electronic filing system or by facsimile to (571) 273-2885, on the date below.

Joseph H. Karlin	(Typed or printed name)
/Joseph H. Karlin/	(Signature)
May 22, 2025	(Date)

APPLICATION NO	FILING DATE	FIRST NAMED INVENTOR	ATTORNEY DOCKET NO	CONFIRMATION NO
18/618,609	03/27/2024	Jae Woong Kim	LGES 3.3F-1654 CON CON	3847

TITLE OF INVENTION: Secondary Battery And Method For Manufacturing The Same

APPLN: TYPE	ENTITY STATUS	ISSUE FEE DUE	PUBLICATION FEE DUE	PREV. PAID ISSUE FEE	TOTAL FEE(S) DUE	DATE DUE
nonprovisional	UNDISCOUNTED	$1,290.00			$1,290.00	05/24/2025

EXAMINER	ART UNIT	CLASS-SUBCLASS
A. E. Eggerding	1729	429-094.000

1. Change of correspondence address or indication of "Fee Address" (37 CFR 1.363)

☐ Change of correspondence address (or Change of Correspondence Address form PTO/SB/122) attached.

☐ "Fee Address" indication (or "Fee Address" Indication form PTO/AIA/47 or PTO/SB/47; Rev 03-09 or more recent) attached. **Use of a Customer Number is required.**

2. For printing on the patent front page, list

(1) The names of up to 3 registered patent attorneys or agents OR, alternatively,

(2) The name of a single firm (having as a member a registered attorney or agent) and the names of up to 2 registered patent attorneys or agents. If no name is listed, no name will be printed.

1. Lerner David LLP
2.
3.

3. ASSIGNEE NAME AND RESIDENCE DATA TO BE PRINTED ON THE PATENT (print or type)

PLEASE NOTE: Unless an assignee is identified below, no assignee data will appear on the patent. If an assignee is identified below, the document must have been previously recorded, or filed for recordation, as set forth in 37 CFR 3.11 and 37 CFR 3.81(a). Completion of this form is NOT a substitute for filing an assignment.

(A) NAME OF ASSIGNEE	(B) RESIDENCE: (CITY and STATE or COUNTRY)
LG Energy Solution, Ltd.	Seoul, Republic of Korea

Please check the appropriate assignee category or categories (will not be printed on the patent): ☐ Individual ☒ Corporation or other private group entity ☐ Government

4a. Fees Submitted: ☒ Issue Fee ☐ Publication Fee (if required)

4b. Method of Payment (*Please first reapply any previously paid fee shown above*):

☒ Electronic Payment via the USPTO patent electronic filing system ☐ Enclosed check ☐ Non-electronic payment by credit card (Attach form PTO-2038)

☒ The Director is hereby authorized to charge the required fee(s), any deficiency, or credit any overpayment to Deposit Account No. 12-1095

5. Change of Entity Status (from status indicated above)

☐ Applicant certifying micro entity status. See 37 CFR 1.29. NOTE: Absent a valid Certification of Micro Entity Status (see forms PTO/SB/15A and 15B), issue fee payment in the micro entity amount will not be accepted at the risk of application abandonment.

☐ Applicant asserting small entity status. See 37 CFR 1.27. NOTE: If the application was previously under micro entity status, checking this box will be taken as a notification of loss of entitlement to micro entity status.

☐ Applicant changing to regular undiscounted fee status. NOTE: Checking this box will be taken as a notification of loss of entitlement to small or micro entity status, as applicable.

NOTE: This form must be signed in accordance with 37 CFR 1.31 and 1.33. See 37 CFR 1.4 for signature requirements and certifications.

Authorized Signature /Joseph H. Karlin/ Date May 22, 2025

Typed or printed name Joseph H. Karlin Registration No. 62,471

UNITED STATES
PATENT AND TRADEMARK OFFICE

P.O. Box 1450
Alexandria, VA 22313 - 1450
www.uspto.gov

ELECTRONIC PAYMENT RECEIPT

APPLICATION #	RECEIPT DATE / TIME	ATTORNEY DOCKET #
18/618,609	**05/22/2025 04:11:34 PM Z ET**	**LGES 3.3F-1654 CON CON**

Title of Invention

Secondary Battery And Method For Manufacturing The Same

Application Information

APPLICATION TYPE	Utility - Nonprovisional Application under 35 USC 111(a)	PATENT #	-
CONFIRMATION #	3847	FILED BY	Sharon McGee
PATENT CENTER #	70549018	AUTHORIZED BY	Kevin Kocun
CUSTOMER #	86765	FILING DATE	03/27/2024
CORRESPONDENCE ADDRESS	-	FIRST NAMED INVENTOR	Jae Woong Kim

Payment Information

PAYMENT METHOD	PAYMENT TRANSACTION ID	PAYMENT AUTHORIZED BY
CARD / 1011	**E20255LG12129115**	**Sharon McGee**

FEE CODE	DESCRIPTION	ITEM PRICE($)	QUANTITY	ITEM TOTAL($)
1501	UTILITY ISSUE FEE	1290.00	1	1290.00
			TOTAL AMOUNT:	**$1,290.00**

This Acknowledgement Receipt evidences receipt on the noted date by the USPTO of the indicated documents, characterized by the applicant, and including page counts, where applicable. It serves as evidence of receipt similar to a Post Card, as described in MPEP 503.

New Applications Under 35 U.S.C. 111

If a new application is being filed and the application includes the necessary components for filing date (see 37 CFR 1.53(b)-(d) and MPEP 506), a Filing Receipt (37 CFR 1.54) will be issued in due course and the date shown on this Acknowledgement Receipt will establish the filing date of the application

National Stage of an International Application under 35 U.S.C. 371

If a timely submission to enter the national stage of an international application is compliant with the conditions of 35 U.S.C. 371 and other applicable requirements a Form PCT/DO/EO/903 indicating acceptance of the application as a national stage submission under 35 U.S.C. 371 will be issued in addition to the Filing Receipt, in due course.

New International Application Filed with the USPTO as a Receiving Office

If a new international application is being filed and the international application includes the necessary components for an international filing date (see PCT Article 11 and MPEP 1810), a Notification of the International Application Number and of the International Filing Date (Form PCT/RO/105) will be issued in due course, subject to prescriptions concerning national security, and the date shown on this Acknowledgement Receipt will establish the international filing date of the application.

UNITED STATES PATENT AND TRADEMARK OFFICE

UNITED STATES DEPARTMENT OF COMMERCE
United States Patent and Trademark Office
Address: COMMISSIONER FOR PATENTS
P.O. Box 1450
Alexandria, Virginia 22313-1450
www.uspto.gov

APPLICATION NO.	ISSUE DATE	PATENT NO.	ATTORNEY DOCKET NO.	CONFIRMATION NO.
18/618,609	06/24/2025	12341147	LGES 3.3F-1654 CON CON	3847

86765 7590 06/11/2025

LG
Lerner David LLP
20 Commerce Drive
Cranford, NJ 07016

ISSUE NOTIFICATION

The projected patent number and issue date are specified above. The patent will issue electronically. The electronically issued patent is the official patent grant pursuant to 35 U.S.C. § 153. The patent may be accessed on or after the issue date through Patent Center at https://patentcenter.uspto.gov/. The patent will be available in both the public and the private sides of Patent Center. Further assistance in electronically accessing the patent, or about Patent Center, is available by calling the Patent Electronic Business Center at 1-888-217-9197.

The USPTO is implementing electronic patent issuance with a transition period, during which period the USPTO will mail a ceremonial paper copy of the electronic patent grant to the correspondence address of record. Additional copies of the patent (i.e., certified and presentation copies) may be ordered for a fee from the USPTO's Certified Copy Center at https://certifiedcopycenter.uspto.gov/index.html. The Certified Copy Center may be reached at (800)972-6382.

Determination of Patent Term Adjustment under 35 U.S.C. 154 (b)
(application filed on or after May 29, 2000)

The Patent Term Adjustment is 0 day(s). Any patent to issue from the above-identified application will include an indication of the adjustment on the front page.

If a Continued Prosecution Application (CPA) was filed in the above-identified application, the filing date that determines Patent Term Adjustment is the filing date of the most recent CPA.

Applicant will be able to obtain more detailed information by accessing the Patent Center (https://patentcenter.uspto.gov).

Any questions regarding the Patent Term Extension or Adjustment determination should be directed to the Office of Patent Legal Administration at (571)-272-7702. Questions relating to issue and publication fee payments should be directed to the Application Assistance Unit (AAU) of the Office of Patents Stakeholder Experience (OPSE), Stakeholder Support Division (SSD) at (571)-272-4200.

INVENTOR(s) (Please see PATENT CENTER site https://patentcenter.uspto.gov for additional inventors):

Jae Woong Kim, Daejeon, KOREA, REPUBLIC OF;
Hyoung Kwon Kim, Daejeon, KOREA, REPUBLIC OF;
Sang Uck Kim, Daejeon, KOREA, REPUBLIC OF;

APPLICANT(s) (Please see PATENT CENTER site https://patentcenter.uspto.gov for additional applicants):

LG Energy Solution, Ltd., Seoul, KOREA, REPUBLIC OF;

The United States represents the largest, most dynamic marketplace in the world and is an unparalleled location for business investment, innovation, and commercialization of new technologies. The USA offers tremendous resources and advantages for those who invest and manufacture goods here. Through SelectUSA, our nation works to encourage and facilitate business investment. To learn more about why the USA is the best country in the world to develop technology, manufacture products, and grow your business, visit SelectUSA.gov.

UNITED STATES PATENT AND TRADEMARK OFFICE

UNITED STATES DEPARTMENT OF COMMERCE
United States Patent and Trademark Office
Address: COMMISSIONER FOR PATENTS
P.O. Box 1450
Alexandria, Virginia 22313-1450
www.uspto.gov

APPLICATION NO.	FILING DATE	FIRST NAMED INVENTOR	ATTORNEY DOCKET NO.	CONFIRMATION NO.
18/618,609	03/27/2024	Jae Woong Kim	LGES 3.3F-1654 CON CON	3847

86765 7590 06/24/2025
LG
Lerner David LLP
20 Commerce Drive
Cranford, NJ 07016

EXAMINER
EGGERDING, ALIX ECHELMEYER

ART UNIT	PAPER NUMBER
1729	

NOTIFICATION DATE	DELIVERY MODE
06/24/2025	ELECTRONIC

Please find below and/or attached an Office communication concerning this application or proceeding.

The time period for reply, if any, is set in the attached communication.

Notice of the Office communication was sent electronically on above-indicated "Notification Date" to the following e-mail address(es):

eOfficeAction@lernerdavid.com

UNITED STATES PATENT AND TRADEMARK OFFICE

UNITED STATES DEPARTMENT OF COMMERCE
United States Patent and Trademark Office
Address: COMMISSIONER FOR PATENTS
P.O. Box 1450
Alexandria, Virginia 22313-1450
www.uspto.gov

APPLICATION NO.	ISSUE DATE	PATENT NO.
18/618,609	24-Jun-2025	12341147

LG
Lerner David LLP
20 Commerce Drive
Cranford, NJ 07016

EGRANT NOTIFICATION

Your electronic patent grant (eGrant) is now available, which can be accessed via Patent Center at https://patentcenter.uspto.gov

The electronic patent grant is the official patent grant under 35 U.S.C. 153. For more information, please visit https://www.uspto.gov/electronicgrants

PATENT APPLICATION FEE DETERMINATION RECORD Substitute for Form PTO-875	Application or Docket Number 18/618,609

APPLICATION AS FILED - PART I

FOR	(Column 1) NUMBER FILED	(Column 2) NUMBER EXTRA	SMALL ENTITY RATE($)	SMALL ENTITY FEE($)	OR	OTHER THAN SMALL ENTITY RATE($)	OTHER THAN SMALL ENTITY FEE($)
BASIC FEE (37 CFR 1.16(a), (b), or (c))	N/A	N/A	N/A			N/A	320
SEARCH FEE (37 CFR 1.16(k), (i), or (m))	N/A	N/A	N/A			N/A	700
EXAMINATION FEE (37 CFR 1.16(o), (p), or (q))	N/A	N/A	N/A			N/A	800
TOTAL CLAIMS (37 CFR 1.16(i))	14 minus 20 =	* 0			OR	x =	0
INDEPENDENT CLAIMS (37 CFR 1.16(h))	1 minus 3 =	*				x =	0
APPLICATION SIZE FEE (37 CFR 1.16(s))	If the specification and drawings exceed 100 sheets of paper, the application size fee due is $310 ($155 for small entity) for each additional 50 sheets or fraction thereof. See 35 U.S.C. 41(a)(1)(G) and 37 CFR 1.16(s).						0
MULTIPLE DEPENDENT CLAIM PRESENT (37 CFR 1.16(j))							0
* If the difference in column 1 is less than zero, enter "0" in column 2.			TOTAL			TOTAL	1820

APPLICATION AS AMENDED - PART II

		(Column 1) CLAIMS REMAINING AFTER AMENDMENT		(Column 2) HIGHEST NUMBER PREVIOUSLY PAID FOR	(Column 3) PRESENT EXTRA	SMALL ENTITY RATE($)	SMALL ENTITY ADDITIONAL FEE($)	OR	OTHER THAN SMALL ENTITY RATE($)	OTHER THAN SMALL ENTITY ADDITIONAL FEE($)
AMENDMENT A	Total (37 CFR 1.16(i))	*	Minus	**	=	x =		OR	x =	
AMENDMENT A	Independent (37 CFR 1.16(h))	*	Minus	***	=	x =		OR	x =	
AMENDMENT A	Application Size Fee (37 CFR 1.16(s))									
AMENDMENT A	FIRST PRESENTATION OF MULTIPLE DEPENDENT CLAIM (37 CFR 1.16(j))							OR		
						TOTAL ADD'L FEE		OR	TOTAL ADD'L FEE	

		(Column 1) CLAIMS REMAINING AFTER AMENDMENT		(Column 2) HIGHEST NUMBER PREVIOUSLY PAID FOR	(Column 3) PRESENT EXTRA	RATE($)	ADDITIONAL FEE($)	OR	RATE($)	ADDITIONAL FEE($)
AMENDMENT B	Total (37 CFR 1.16(i))	*	Minus	**	=	x =		OR	x =	
AMENDMENT B	Independent (37 CFR 1.16(h))	*	Minus	***	=	x =		OR	x =	
AMENDMENT B	Application Size Fee (37 CFR 1.16(s))									
AMENDMENT B	FIRST PRESENTATION OF MULTIPLE DEPENDENT CLAIM (37 CFR 1.16(j))							OR		
						TOTAL ADD'L FEE		OR	TOTAL ADD'L FEE	

* If the entry in column 1 is less than the entry in column 2, write "0" in column 3.
** If the "Highest Number Previously Paid For" IN THIS SPACE is less than 20, enter "20".
*** If the "Highest Number Previously Paid For" IN THIS SPACE is less than 3, enter "3".
The "Highest Number Previously Paid For" (Total or Independent) is the highest found in the appropriate box in column 1.

PTO/SB/06 (09-11)
Approved for use through 1/31/2014. OMB 0651-0032
U.S. Patent and Trademark Office; U.S. DEPARTMENT OF COMMERCE
Under the Paperwork Reduction Act of 1995, no persons are required to respond to a collection of information unless it displays a valid OMB control number.

PATENT APPLICATION FEE DETERMINATION RECORD Substitute for Form PTO-875	Application or Docket Number 18/618,609	Filing Date	☐ To be Mailed

ENTITY: ☐ LARGE ☐ SMALL ☐ MICRO

APPLICATION AS FILED - PART I

FOR	(Column 1) NUMBER FILED	(Column 2) NUMBER EXTRA		RATE ($)	FEE ($)
☐ BASIC FEE (37 CFR 1.16(a), (b), or (c))	N/A	N/A		N/A	
☐ SEARCH FEE (37 CFR 1.16(k), (i), or (m))	N/A	N/A		N/A	
☐ EXAMINATION FEE (37 CFR 1.16(o), (p), or (q))	N/A	N/A		N/A	
TOTAL CLAIMS (37 CFR 1.16(i))	minus 20 =	*		x $ =	
INDEPENDENT CLAIMS (37 CFR 1.16(h))	minus 3 =	*		x $ =	
☐ APPLICATION SIZE FEE (37 CFR 1.16(s))	If the specification and drawings exceed 100 sheets of paper, the application size fee due is $310 ($155 for small entity) for each additional 50 sheets or fraction thereof. See 35 U.S.C. 41(a)(1)(G) and 37 CFR 1.16(s).				
☐ MULTIPLE DEPENDENT CLAIM PRESENT (37 CFR 1.16(j))					
* If the difference in column 1 is less than zero, enter "0" in column 2.				TOTAL	

APPLICATION AS AMENDED - PART II

		(Column 1)		(Column 2)	(Column 3)			
AMENDMENT	01/13/2025	CLAIMS REMAINING AFTER AMENDMENT		HIGHEST NUMBER PREVIOUSLY PAID FOR	PRESENT EXTRA		RATE ($)	ADDITIONAL FEE ($)
	Total (37 CFR 1.16(i))	* 15	Minus	** 20	= 0		x $ =	0
	Independent (37 CFR 1.16(h))	* 1	Minus	*** 3	= 0		x $ =	0
	☐ Application Size Fee (37 CFR 1.16(s))							
	☐ FIRST PRESENTATION OF MULTIPLE DEPENDENT CLAIM (37 CFR 1.16(j))							
							TOTAL ADD'L FEE	0

		(Column 1)		(Column 2)	(Column 3)			
AMENDMENT		CLAIMS REMAINING AFTER AMENDMENT		HIGHEST NUMBER PREVIOUSLY PAID FOR	PRESENT EXTRA		RATE ($)	ADDITIONAL FEE ($)
	Total (37 CFR 1.16(i))	*	Minus	**	=		x $ =	
	Independent (37 CFR 1.16(h))	*	Minus	***	=		x $ =	
	☐ Application Size Fee (37 CFR 1.16(s))							
	☐ FIRST PRESENTATION OF MULTIPLE DEPENDENT CLAIM (37 CFR 1.16(j))							
							TOTAL ADD'L FEE	

* If the entry in column 1 is less than the entry in column 2, write "0" in column 3.	PATENT APPEAL SPECIALIST
** If the "Highest Number Previously Paid For" IN THIS SPACE is less than 20, enter "20".	/RONDA K BROWN/
*** If the "Highest Number Previously Paid For" IN THIS SPACE is less than 3, enter "3".	
The "Highest Number Previously Paid For" (Total or Independent) is the highest number found in the appropriate box in column 1.	

This collection of information is required by 37 CFR 1.16. The information is required to obtain or retain a benefit by the public which is to file (and by the USPTO to process) an application. Confidentiality is governed by 35 U.S.C. 122 and 37 CFR 1.14. This collection is estimated to take 12 minutes to complete, including gathering, preparing, and submitting the completed application form to the USPTO. Time will vary depending upon the individual case. Any comments on the amount of time you require to complete this form and/or suggestions for reducing this burden, should be sent to the Chief Information Officer, U.S. Patent and Trademark Office, U.S. Department of Commerce, P.O. Box 1450, Alexandria, VA 22313-1450. DO NOT SEND FEES OR COMPLETED FORMS TO THIS ADDRESS. **SEND TO: Commissioner for Patents, P.O. Box 1450, Alexandria, VA 22313-1450.**

If you need assistance in completing the form, call 1-800-PTO-9199 and select option 2.

Patent Export, 2026-05-28 01:28:50 +0000

Search results for: PNS=(US12341147);
Collections searched: DWPI; ARIPO grant; Argentina UM; Argentina app; Armenia grant; Australia UM; Australia app; Australia grant; Austria UM; Austria app; Austria grant; Belarus UM; Belarus grant; Belgium app; Belgium grant; Brazil UM; Brazil app; Brazil grant; Bulgaria UM; Bulgaria app; Bulgaria grant; Canada app; Canada grant; China, Mainland UM; China, Mainland app; China, Mainland grant; Colombia app; Costa Rica UM; Costa Rica app; Croatia UM; Croatia app; Croatia grant; Cuba app; Cuba grant; Czech Republic UM; Czech Republic app; Czech Republic grant; Czechoslovakia grant; Denmark UM; Denmark app; Denmark grant; Estonia UM; Estonia app; Estonia grant; Eurasian (EAPO) grant; Europe (EP) app; Europe (EP) grant; Finland app; Finland grant; France app; France grant; Georgia grant; German Democratic Republic app; German Democratic Republic grant; Germany UM; Germany app; Germany grant; Greece app; Greece grant; Gulf Cooperation Council grant; Hong Kong UM; Hong Kong app; Hong Kong grant; Hungary grant; Iceland grant; India app; India grant; Indonesia UM; Indonesia app; Ireland UM; Ireland app; Ireland grant; Israel grant; Italy grant; Italy grant; Italy grant; Italy grant; Japan UM; Japan app; Japan grant; Korea UM; Korea app; Korea grant; Latvia grant; Lithuania grant; Luxembourgh app; Luxembourgh grant; Malaysia app; Malaysia grant; Mexico app; Mexico grant; Moldova UM; Moldova grant; Monaco grant; Mongolia UM; Mongolia grant; Morocco app; Morocco grant; Netherlands app; Netherlands grant; New Zealand grant; Norway app; Norway grant; OAPI grant; PCT (WO) app; Philippines UM; Philippines app; Philippines grant; Poland UM; Poland grant; Portugal UM; Portugal app; Portugal grant; Romania UM; Romania app; Romania granted; Russia UM; Russia app; Russia grant; Saudi Arabia app; Saudi Arabia grant; Serbia UM; Serbia app; Serbia grant; Singapore app; Singapore grant; Slovakia UM; Slovakia app; Slovakia grant; Slovenia UM; Slovenia grant; South Africa app; Spain UM; Spain app; Spain grant; Sweden app; Sweden grant; Switzerland app; Switzerland grant; Taiwan UM; Taiwan appl; Taiwan grant; Thailand UM; Thailand app; Thailand grant; Tunisia app; Turkey UM; Turkey app; UK app; UK grant; USSR grant; Ukraine UM; Ukraine grant; United States app; United States grant; Uruguay app; Vietnam UM; Vietnam app; Vietnam grant; Other

Table of Contents

1. US12341147B2 Secondary battery and method for manufacturing the same

Family 1/1

1 record(s) per family

Record 1/1 US12341147B2 Secondary battery and method for manufacturing the same

Title: Secondary battery and method for manufacturing the same

Title - DWPI: Secondary battery for use as e.g. AC power source, supplied to e.g. building, has notching tab portion formed and folded if electrode is reeled to be overlapped such that active material is coated from maintenance unit

Priority Number: KR201748645A | WO2018KR4366A | KR201843191A | US16498751A | US18132719A

Priority Number - DWPI: KR201843191A | KR201748645A | KR20178645A | WO2018KR4366A

Priority Date: 2017-04-14 | 2018-04-13 | 2018-04-13 | 2019-09-27 | 2023-04-10

Priority Date - DWPI: 2018-04-13 | 2017-04-14 | 2017-04-14 | 2018-04-13

Application Number: US18618609A

Application Date: 2024-03-27

Publication Date: 2025-06-24

IPC Class Table:

IPC	Section	Class	Subclass	Class Group	Subgroup
H01M001004	H	H01	H01M	H01M0010	H01M001004
H01M0050538	H	H01	H01M	H01M0050	H01M0050538
H01M0050536	H	H01	H01M	H01M0050	H01M0050536

IPC Class Table - DWPI:

IPC - DWPI	Section - DWPI	Class - DWPI	Subclass - DWPI	Class Group - DWPI	Subgroup - DWPI
H01M000226 (IPC 1-7)	H	H01	H01M	H01M0002	H01M000226 (IPC 1-7)
H01M001004 (IPC 1-7)	H	H01	H01M	H01M0010	H01M001004 (IPC 1-7)
H01M00100587 (IPC 1-7)	H	H01	H01M	H01M0010	H01M00100587 (IPC 1-7)
H01M	H	H01	H01M	H01M	H01M
H01M001004	H	H01	H01M	H01M0010	H01M001004

H01M00100587	H	H01	H01M	H01M0010	H01M00100587
H01M001042	H	H01	H01M	H01M0010	H01M001042
H01M000226	H	H01	H01M	H01M0002	H01M000226
H01M000404	H	H01	H01M	H01M0004	H01M000404
H01M000413	H	H01	H01M	H01M0004	H01M000413
H01M0004139	H	H01	H01M	H01M0004	H01M0004139
H01M000470	H	H01	H01M	H01M0004	H01M000470
H01M0050107	H	H01	H01M	H01M0050	H01M0050107
H01M0050528	H	H01	H01M	H01M0050	H01M0050528
H01M0050533	H	H01	H01M	H01M0050	H01M0050533
H01M0050536	H	H01	H01M	H01M0050	H01M0050536
H01M0050538	H	H01	H01M	H01M0050	H01M0050538
H01M0050586	H	H01	H01M	H01M0050	H01M0050586

Assignee/Applicant: LG Energy Solution Ltd.,Seoul,KR

Assignee - Current US: LG Energy Solution Ltd.

JP F Terms:

JP FI Codes:

Item Number: 1

Assignee - Original: LG Energy Solution Ltd.

Any CPC Table:

Type	CPC - Current - Invention	CPC - Current - Additional	Version	Office
Current	**H01M 10/0422**	-	20130101	EP; KR; US
Current	H01M 10/0431	-	20130101	KR; US
Current Current	H01M 10/0587 H01M 10/4235	Y02E 60/10	20130101 20130101	EP; KR EP; KR
Current	H01M 50/538	-	20210101	EP; KR; US
Current	-	H01M 50/536	20210101	EP; US
Current	-	Y02P 70/50	20151101	EP; KR
Original Original	**H01M 10/0422** H01M 10/0431	-	20130101 20130101	US US

Original	H01M 50/538	H01M 50/536	20210101	US

ECLA:

Abstract:

The present invention relates to a secondary battery in which an electrode tab is improved in mechanical strength and a method for manufacturing the same. Also, the secondary battery according to the present invention includes: an electrode provided with a coating portion coated with an active material on an electrode collector and a non-coating portion on which the active material is not applied to the electrode collector, the non-coating portion being adjacent to the coating portion in a width direction perpendicular to a longitudinal direction of the electrode collector, the non-coating portion having a plurality of notching tabs formed therein such that each of the plurality of notching tabs extends away from the coating portion in a width direction. When the electrode assembly is in the wound state, the plurality of notching tabs are circumferentially distributed about a central axis of the electrode assembly.

Language of Publication: EN

INPADOC Legal Status Table:

Gazette Date	Code	INPADOC Legal Status Impact
2025-06-11	STCF	-
Description: INFORMATION ON STATUS: PATENT GRANT PATENTED CASE		
2025-02-20	STPP	-
Description: INFORMATION ON STATUS: PATENT APPLICATION AND GRANTING PROCEDURE IN GENERAL NOTICE OF ALLOWANCE MAILED -- APPLICATION RECEIVED IN OFFICE OF PUBLICATIONS		
2025-01-16	STPP	-
Description: INFORMATION ON STATUS: PATENT APPLICATION AND GRANTING PROCEDURE IN GENERAL RESPONSE TO NON-FINAL OFFICE ACTION ENTERED AND FORWARDED TO EXAMINER		
2024-10-11	STPP	-
Description: INFORMATION ON STATUS: PATENT APPLICATION AND GRANTING PROCEDURE IN GENERAL NON FINAL ACTION MAILED		
2024-04-30	STPP	-
Description: INFORMATION ON STATUS: PATENT APPLICATION AND GRANTING PROCEDURE IN GENERAL DOCKETED NEW CASE - READY FOR EXAMINATION		

2024-03-27	FEPP	-
Description: FEE PAYMENT PROCEDURE ENTITY STATUS SET TO UNDISCOUNTED (ORIGINAL EVENT CODE: BIG.); ENTITY STATUS OF PATENT OWNER: LARGE ENTITY		

Post-Issuance (US):

Reassignment (US) Table:

Maintenance Status (US):

Litigation (US):

Opposition (EP):

License (EP):

EPO Procedural Status:

Front Page Drawing:

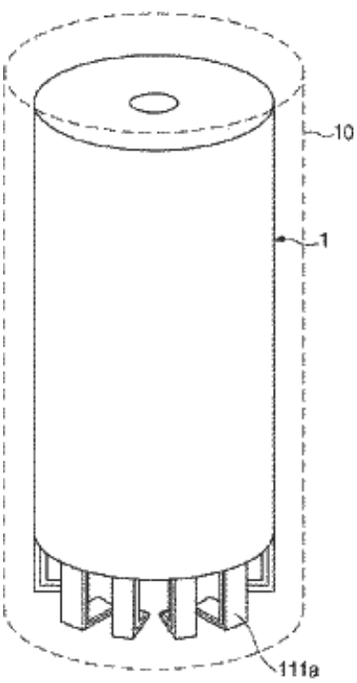

Copyright 2007-2026 CLARIVATE

United States Patent and Trademark Office

Office of the Commissioner for Patents

Secondary Battery And Method For Manufacturing The Same

PATENT #	APPLICATION #	FILING DATE	ISSUE DATE
12341147	18618609	03/27/2024	06/24/2025

Payment Window Status

WINDOW	STATUS	FEES
3.5 Year	Not Open	Not Due

No maintenance fees are due at this time. 3.5 year window opens on 06/24/2028.

Window	First Day to Pay	Surcharge Starts	Last Day to Pay	Status	Fees
3.5 Year	06/24/2028	12/27/2028	06/25/2029	Not Open	Not Due
7.5 Year	06/24/2032	12/28/2032	06/24/2033	Not Open	Not Due
11.5 Year	06/24/2036	12/25/2036	06/24/2037	Not Open	Not Due

Patent Holder Information

Customer # 86765

Entity Status UNDISCOUNTED

Phone Number 9086545000

Address
LG
Lerner David LLP
20 Commerce Drive
Cranford, NJ 07016
UNITED STATES