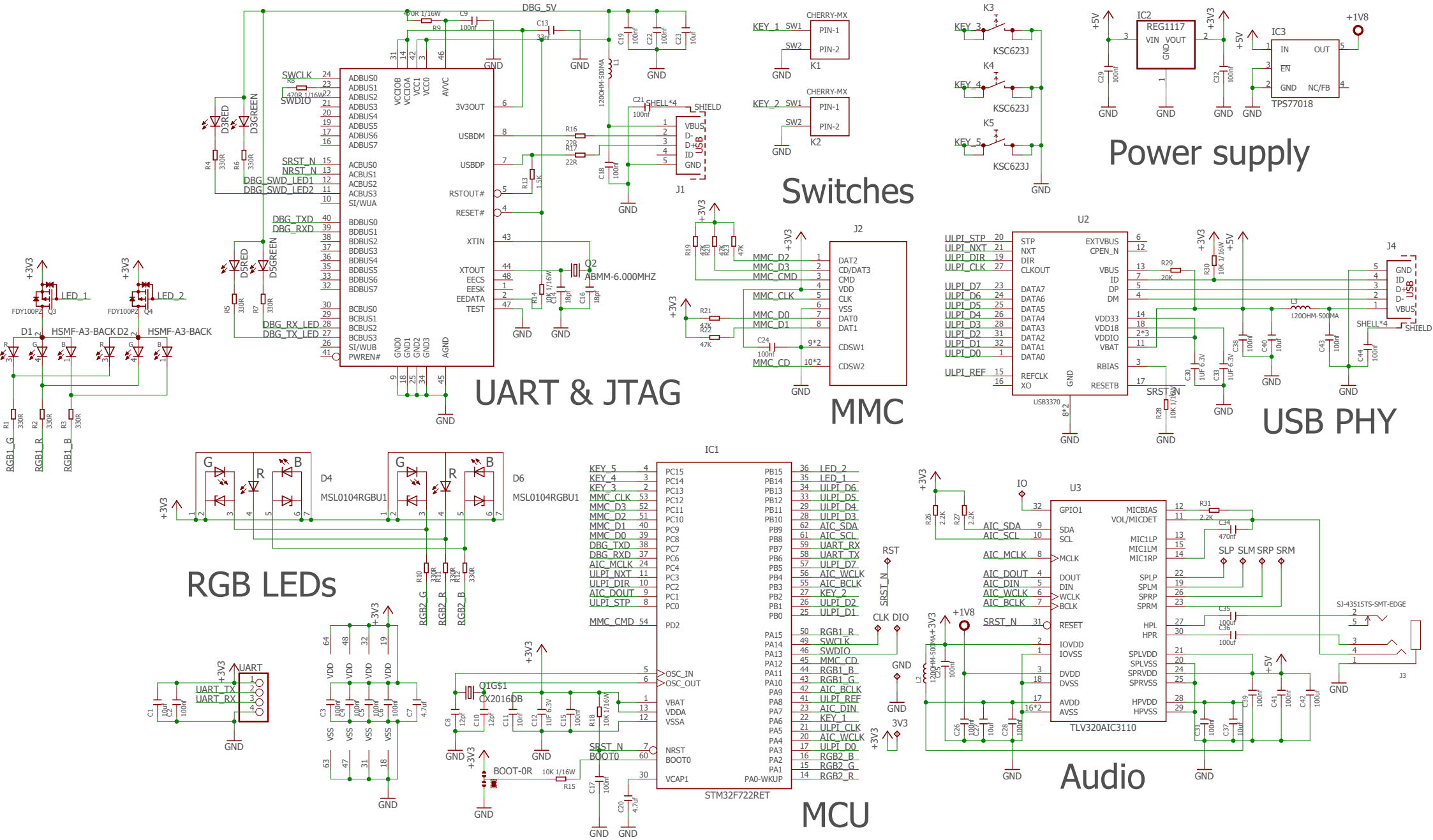
UART & JTAG
Switches
Power supply
MMC
USB PHY
RGB LEDs
MCU
Audio
STM32F722RET
TLV320AIC3110
USB3370
TPS77018
REG1117
CHERRY-MX
KSC623J
SJ-43515TS-SMT-EDGE
MSL0104RGBU1
FDY100P2
HSMF-A3-BACK
ABMM-6.000MHZ
CX2016DB
DBG_5V
+3V3
+5V
+1V8
GND