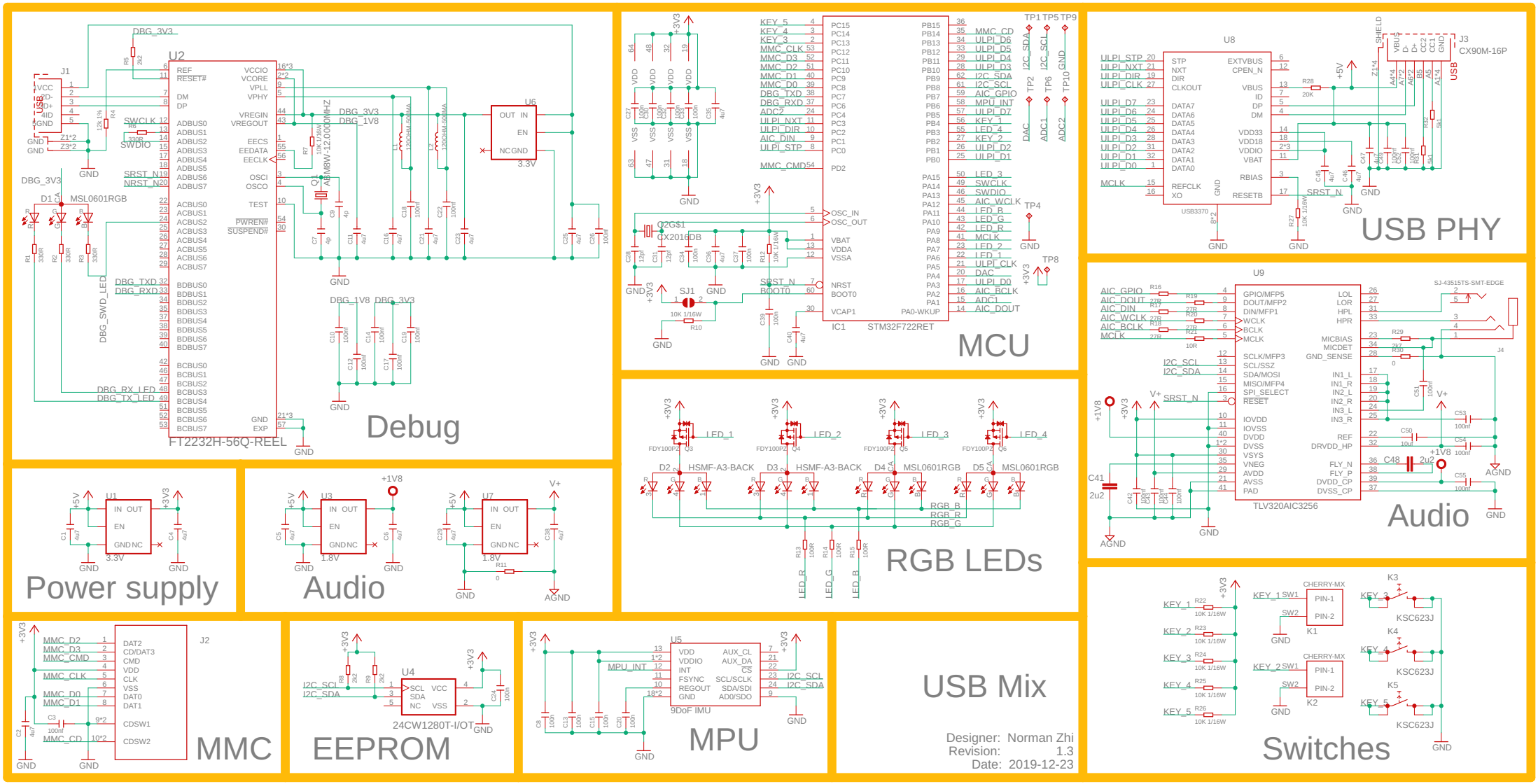
Debug
FT2232H-56Q-REEL
MCU
STM32F722RET
USB PHY
USB3370
CX90M-16P
Audio
TLV320AIC3256
RGB LEDs
Power supply
Audio
MMC
EEPROM
24CW1280T-I/OT
MPU
9DoF IMU
USB Mix
Designer: Norman Zhi
Revision: 1.3
Date: 2019-12-23
Switches