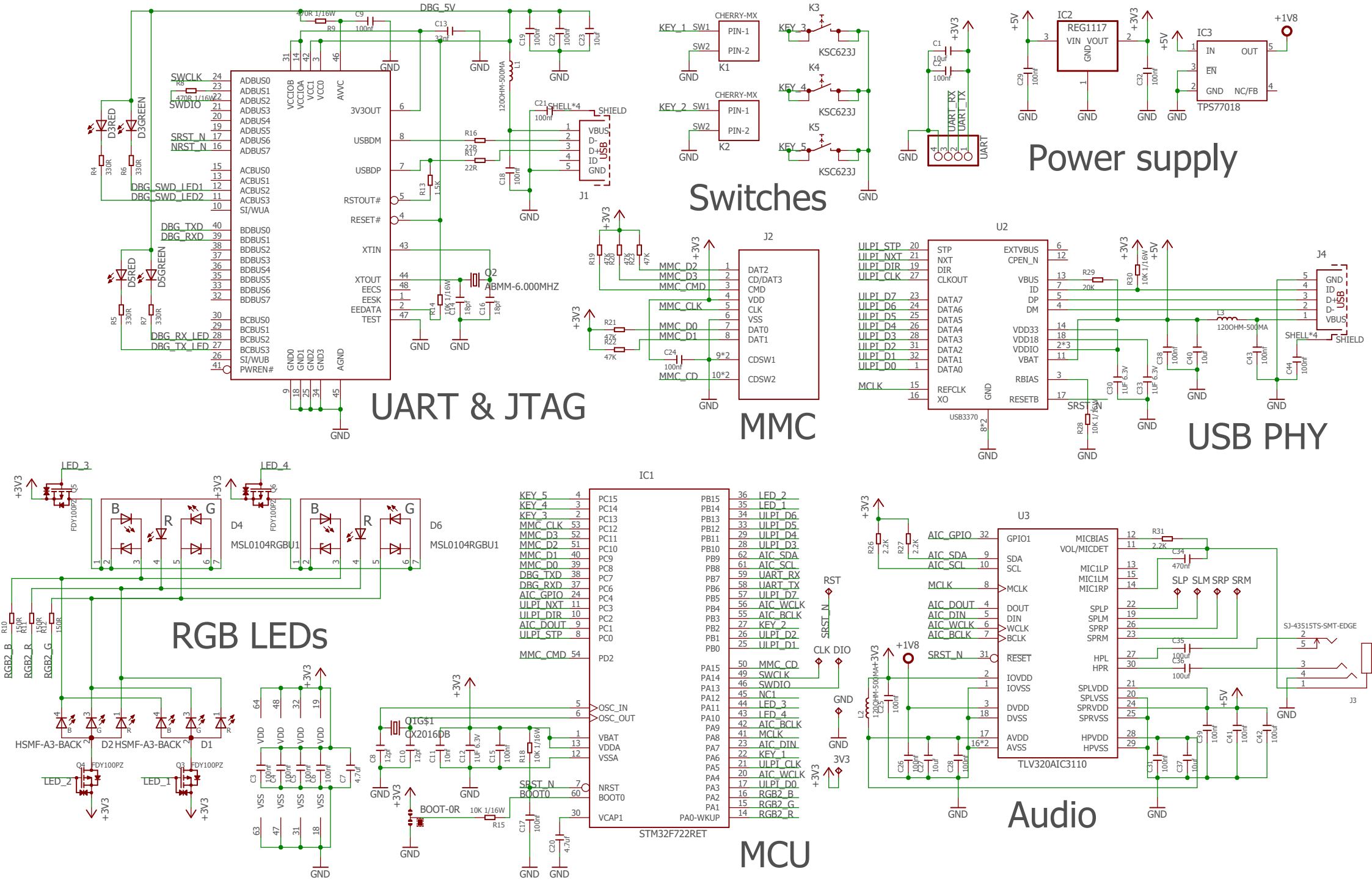
UART & JTAG
Switches
Power supply
MMC
USB PHY
RGB LEDs
MCU
Audio
IC1
STM32F722RET
IC2
REG1117
IC3
TPS77018
U2
USB3370
U3
TLV320AIC3110
J1
J2
J3
J4
Q2
ABMM-6.000MHZ
Q1G$1
CX2016DB
BOOT-0R
D4
MSL0104RGBU1
D6
MSL0104RGBU1
HSMF-A3-BACK
D2
HSMF-A3-BACK
D1
K1
K2
K3
K4
K5
KSC623J
CHERRY-MX
DBG_5V
+3V3
+5V
+1V8
GND