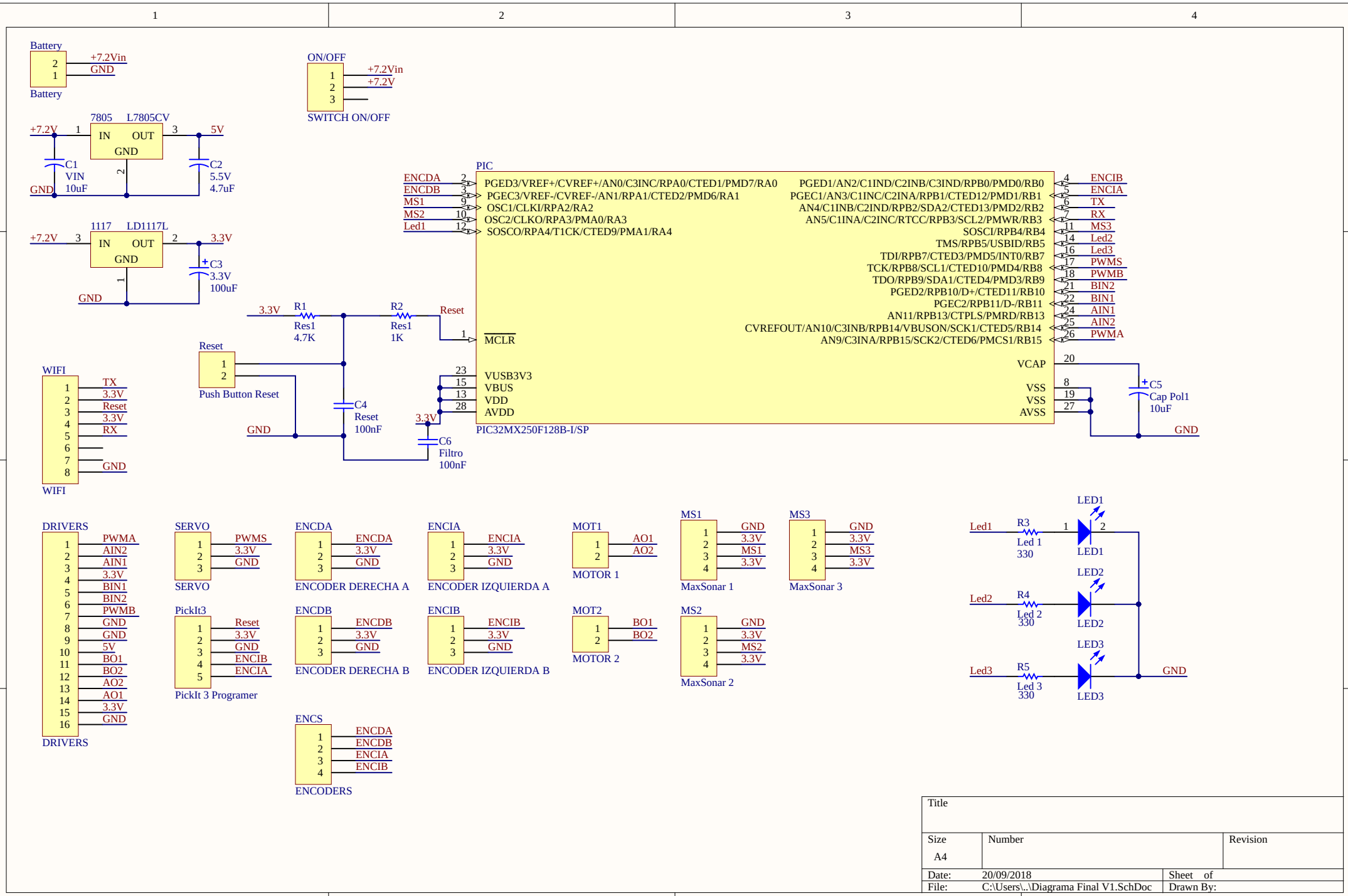
Battery
+7.2Vin
GND
Battery
ON/OFF
+7.2Vin
+7.2V
SWITCH ON/OFF
7805
L7805CV
IN
OUT
GND
+7.2V
5V
C1
VIN
10uF
C2
5.5V
4.7uF
1117
LD1117L
3.3V
C3
3.3V
100uF
PIC
ENCDA
ENCDB
MS1
MS2
Led1
PGED3/VREF+/CVREF+/AN0/C3INC/RPA0/CTED1/PMD7/RA0
PGEC3/VREF-/CVREF-/AN1/RPA1/CTED2/PMD6/RA1
OSC1/CLKI/RPA2/RA2
OSC2/CLKO/RPA3/PMA0/RA3
SOSCO/RPA4/T1CK/CTED9/PMA1/RA4
PGED1/AN2/C1IND/C2INB/C3IND/RPB0/PMD0/RB0
PGEC1/AN3/C1INC/C2INA/RPB1/CTED12/PMD1/RB1
AN4/C1INB/C2IND/RPB2/SDA2/CTED13/PMD2/RB2
AN5/C1INA/C2INC/RTCC/RPB3/SCL2/PMWR/RB3
SOSCI/RPB4/RB4
TMS/RPB5/USBID/RB5
TDI/RPB7/CTED3/PMD5/INT0/RB7
TCK/RPB8/SCL1/CTED10/PMD4/RB8
TDO/RPB9/SDA1/CTED4/PMD3/RB9
PGED2/RPB10/D+/CTED11/RB10
PGEC2/RPB11/D-/RB11
AN11/RPB13/CTPLS/PMRD/RB13
CVREFOUT/AN10/C3INB/RPB14/VBUSON/SCK1/CTED5/RB14
AN9/C3INA/RPB15/SCK2/CTED6/PMCS1/RB15
ENCIB
ENCIA
TX
RX
MS3
Led2
Led3
PWMS
PWMB
BIN2
BIN1
AIN1
AIN2
PWMA
MCLR
VUSB3V3
VBUS
VDD
AVDD
VCAP
VSS
VSS
AVSS
PIC32MX250F128B-I/SP
3.3V
R1
Res1
4.7K
R2
Res1
1K
Reset
Push Button Reset
C4
Reset
100nF
C6
Filtro
100nF
C5
Cap Pol1
10uF
GND
WIFI
TX
3.3V
Reset
3.3V
RX
GND
DRIVERS
PWMA
AIN2
AIN1
3.3V
BIN1
BIN2
PWMB
GND
GND
5V
BO1
BO2
AO2
AO1
3.3V
GND
SERVO
PWMS
3.3V
GND
ENCDA
ENCIA
MOT1
AO1
AO2
MOTOR 1
MS1
GND
3.3V
MS1
3.3V
MaxSonar 1
MS3
GND
3.3V
MS3
3.3V
MaxSonar 3
PickIt3
Reset
3.3V
GND
ENCIB
ENCIA
PickIt 3 Programer
ENCDB
ENCIB
MOT2
BO1
BO2
MOTOR 2
MS2
GND
3.3V
MS2
3.3V
MaxSonar 2
ENCS
ENCDA
ENCDB
ENCIA
ENCIB
ENCODERS
ENCODER DERECHA A
ENCODER IZQUIERDA A
ENCODER DERECHA B
ENCODER IZQUIERDA B
LED1
R3
Led 1
330
LED2
R4
Led 2
330
LED3
R5
Led 3
330
Title
Size
A4
Number
Revision
Date:
20/09/2018
Sheet of
File:
C:\Users\..\Diagrama Final V1.SchDoc
Drawn By: