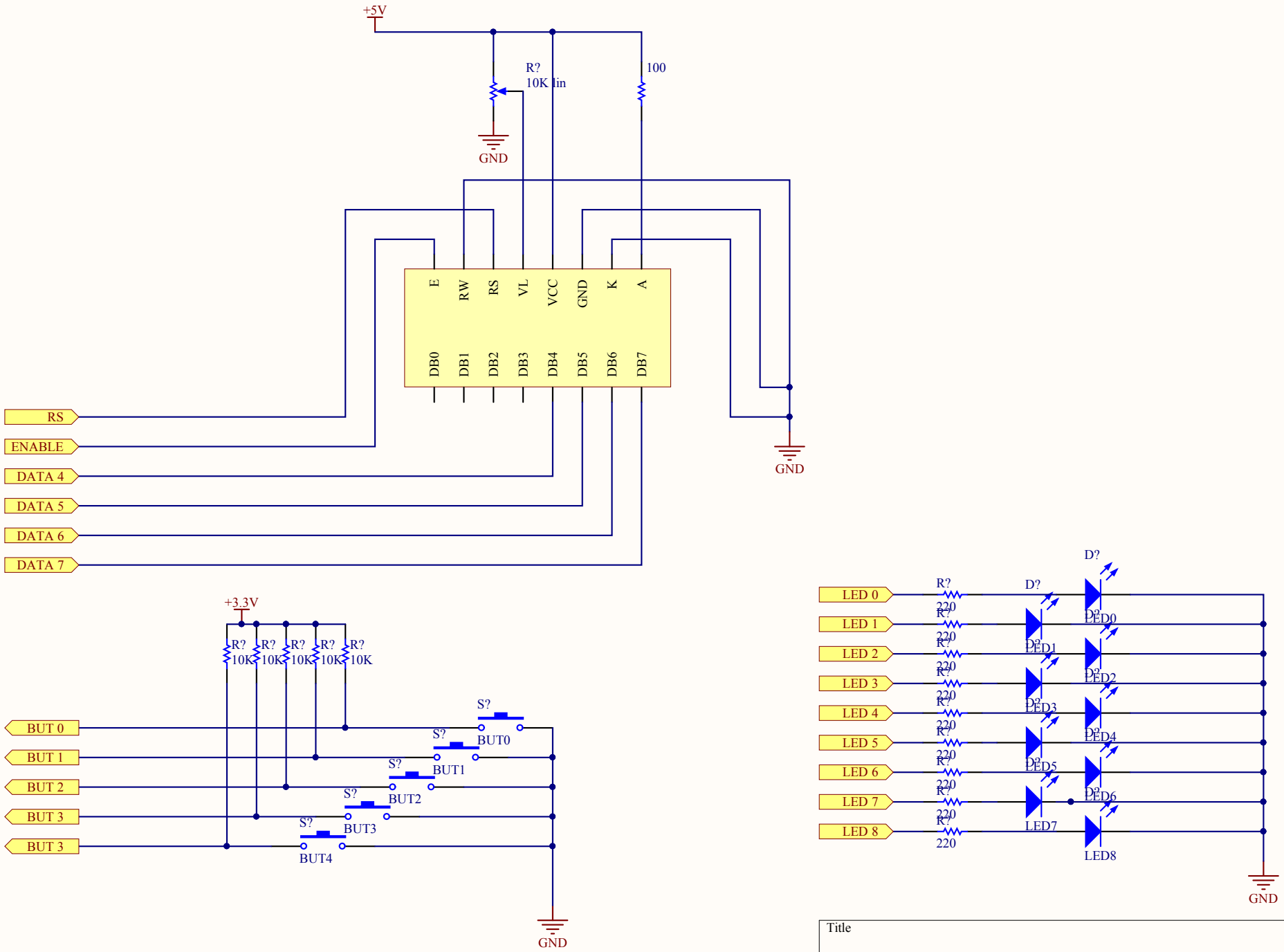

Title		
Size A	Number	Revision
Date: 4/19/2016	Sheet of	
File: C:\Users\bocal\Downloads\display.SchDoc	Drawn By:	