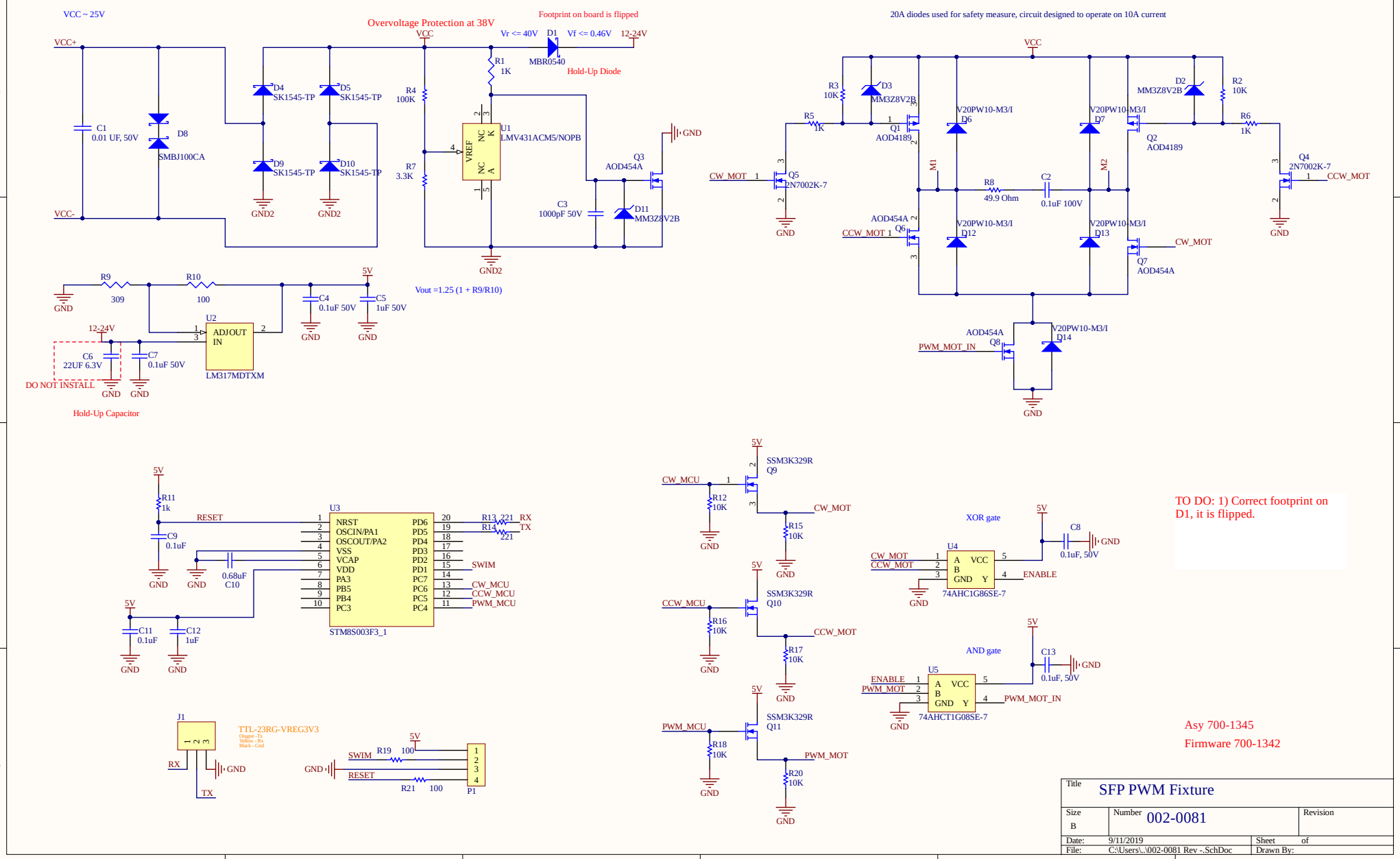
VCC ~ 25V
Overvoltage Protection at 38V
Footprint on board is flipped
20A diodes used for safety measure, circuit designed to operate on 10A current
VCC+
VCC-
C1
0.01 UF, 50V
D8
SMBJ100CA
D4
SK1545-TP
D5
SK1545-TP
D9
SK1545-TP
D10
SK1545-TP
GND2
R4
100K
R7
3.3K
VCC
Vr <= 40V
D1
Vf <= 0.46V
12-24V
MBR0540
Hold-Up Diode
R1
1K
U1
LMV431ACM5/NOPB
VREF
NC
K
A
C3
1000pF 50V
Q3
AOD454A
D11
MM3Z8V2B
GND
R9
309
R10
100
5V
C4
0.1uF 50V
C5
1uF 50V
Vout =1.25 (1 + R9/R10)
U2
ADJOUT
IN
LM317MDTXM
C6
22UF 6.3V
C7
0.1uF 50V
DO NOT INSTALL
Hold-Up Capacitor
R3
10K
D3
MM3Z8V2B
R5
1K
Q1
AOD4189
V20PW10-M3/I
D6
D7
D2
MM3Z8V2B
R2
10K
R6
1K
Q2
AOD4189
Q4
2N7002K-7
CCW_MOT
CW_MOT
Q5
2N7002K-7
M1
M2
R8
49.9 Ohm
C2
0.1uF 100V
AOD454A
Q6
D12
D13
Q7
AOD454A
AOD454A
Q8
PWM_MOT_IN
D14
R11
1k
RESET
C9
0.1uF
0.68uF
C10
U3
NRST
OSCIN/PA1
OSCOUT/PA2
VSS
VCAP
VDD
PA3
PB5
PB4
PC3
PD6
PD5
PD4
PD3
PD2
PD1
PC7
PC6
PC5
PC4
R13 221 RX
R14 221 TX
SWIM
CW_MCU
CCW_MCU
PWM_MCU
STM8S003F3_1
C11
0.1uF
C12
1uF
J1
TTL-23RG-VREG3V3
Orange - Tx
Yellow - Rx
Black - Gnd
RX
TX
SWIM
R19 100
RESET
R21 100
P1
SSM3K329R
Q9
Q10
Q11
R12
10K
R15
10K
R16
10K
R17
10K
R18
10K
R20
10K
XOR gate
U4
74AHC1G86SE-7
ENABLE
C8
0.1uF, 50V
AND gate
U5
74AHCT1G08SE-7
PWM_MOT
PWM_MOT_IN
C13
0.1uF, 50V
TO DO: 1) Correct footprint on D1, it is flipped.
Asy 700-1345
Firmware 700-1342
Title
SFP PWM Fixture
Size
B
Number
002-0081
Revision
Date: 9/11/2019
Sheet of
File: C:\Users\..\002-0081 Rev -.SchDoc
Drawn By: