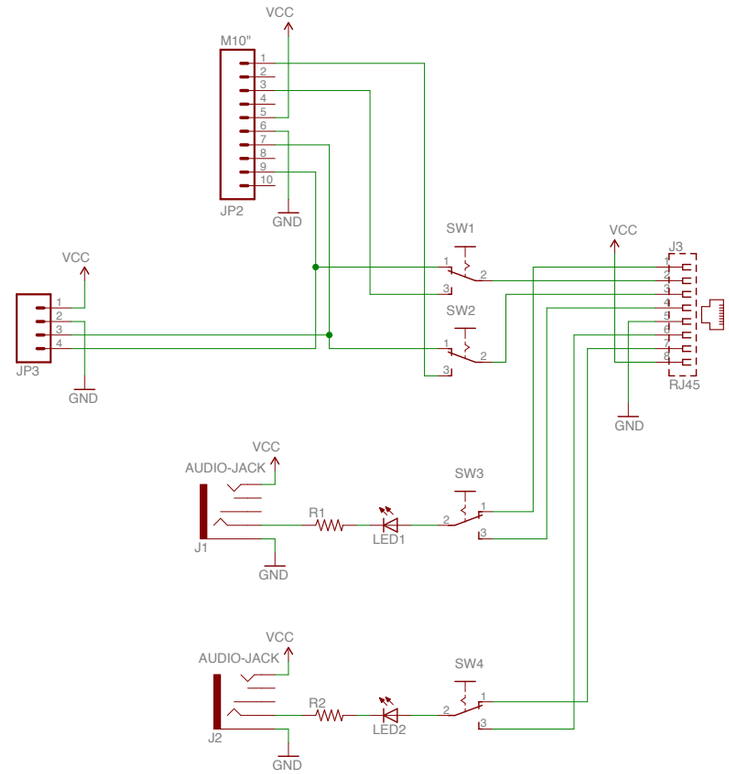

LWorsham, KK6ONL

Project: skmagiik_thing

Document Name:

Document Number:

REV:

Date: 1/16/16 9:11 AM

Sheet: 1/1